United States
Department of
Agriculture

Federal Crop
Insurance
Corporation

FCIC-25010 (11-2020)

LOSS ADJUSTMENT MANUAL STANDARDS HANDBOOK

2021 and Succeeding Crop Years

RISK MANAGEMENT AGENCY
KANSAS CITY, MO 64133

TITLE: **Loss Adjustment Manual Standards Handbook**	**NUMBER: FCIC-25010**
EFFECTIVE DATE: **2021 and Succeeding Crop Years**	**ISSUE DATE**: **November 30, 2020**
SUBJECT: **Provides procedures and instructions for administering general loss adjustment of crop insurance programs.**	**OPI**: **Product Administration and Standards Division** **APPROVED**: /s/ John W. Underwood for **Deputy Administrator for Product Management**

REASONS FOR ISSUANCE:

Major changes: See changes or additions in text which have been highlighted. Three stars (***) identify information that has been removed.

1. Throughout the LAM - Editorial revisions that pertained to grammar, punctuation, deleting unneeded words, rewording to make a sentence flow better, corrections of reference numbers, formatting, etc. were made, but are not listed. Please note that the prices, factors, etc., used within examples in this handbook are for example purposes only, refer to the actuarial documents for the current information.
2. Subparagraph 202(3) – Removed duplicate statement "The FCIC issued procedures are effective as of the approval date" also found in subparagraph 2C.
3. Subparagraph 202(8)(g) – Added the term "inputs" to clarify further what is to be verified during the farm visit.
4. Subparagraph 202(25) – Moved language regarding photo/video requirements from paragraph 1203 to provide general applicability to the insured's claim file.
5. Subparagraph 601B(2) – Added "Important" language regarding 1st crop/2nd crop insurance elections involving multiple AIPs.
6. Subparagraph 603E – Added language regarding DC history to align with clarification made in the 11/30/2020 BP.
7. Subparagraph 722B(1) – Added rice to the list of authorized crops for self-certification replants.
8. Subparagraph 1102H – Added language regarding information that may be needed by ROs when searching for a salvage market for damaged production and renumbered.
9. Subparagraph 1109H(1)(a) – Updated the "GIPSA Performance Verified Mycotoxin Test Kits" link
10. Subparagraph 1109N(5)(h), (6), & (8) Example 8 – Revised language regarding how long a claim may be held open for a crop that has quality deficiencies to align with Section C within the SP.

REASONS FOR ISSUANCE: **(Continued)**

11. Paragraph 1203 – Moved language regarding photo/video requirements to paragraph 202 for general applicability of the insured's claim file. Restated (2) to indicate the use of photos/videos in the insured's claim file for unusual cases.

12. Subparagraph 1235(1) – Removed the reference to "control measures" and revised language for clarity as it has been determined the CP only needs reference to wildlife as a COL for applicability.

13. Subparagraph 1236(6) – Added reference for situations when mechanical incorporation is not possible due to insured COL.

14. Exhibit 3 – Updated COLs applicable to California Citrus Tree, Pecan Trees and Texas Citrus Trees. Removed written references to footnotes as the references are implied with subscripts. Removed duplicate footnotes and renumbered as needed.

15. Exhibit 11D item 25 "Notice of PP" – Revised language to state November 1 or later.

16. Exhibit 16 Example 1 – Revised language to incorporate the length of time a claim may be held open for a crop with quality deficiencies.

17. Exhibit 23 – Updated table to remove references to "Pilot" on applicable crops and added crops and units of measures as needed. Consolidated the chart, moved footnotes to last page, and renumbered as needed within chart and footnote list.

LOSS ADJUSTMENT MANUAL STANDARDS HANDBOOK

CONTROL CHART:

Loss Adjustment Manual (LAM) Standards Handbook							
	TP Page(s)	TC Page(s)	Text Page(s)	Exhibit Number(s)	Exhibit Page(s)	Date	Directive Number
Remove	Entire Handbook					04-2020	FCIC-25010-3H
Insert	Entire Handbook					11-2020	FCIC-25010
Current Index	1-4	1-6	1-324	1-23	325-401	11-2020	FCIC-25010

FILING INSTRUCTIONS:

This handbook replaces the 2020 Loss Adjustment Manual (LAM) Standards Handbook, FCIC-25010-3H (04-2020). This handbook is effective for the 2021 and succeeding crop years and is not retroactive to any 2020 or prior crop year determinations.

THIS PAGE INTENTIONALLY LEFT BLANK

LOSS ADJUSTMENT MANUAL STANDARDS HANDBOOK
TABLE OF CONTENTS

PAGE NO

PART 1 GENERAL INFORMATION

1 Purpose 1
2 Special Instructions 2
3 Operating Policy 3
4 Document Procedures 4
5 Multiple USDA Benefits & Dual Participation 4
6-200 (Reserved)

PART 2 RESPONSIBILITIES

201 AIP Responsibilities 6
202 Loss Adjustment Responsibilities 8
203 Insured's Responsibilities 13
204-300 (Reserved)

PART 3 PRACTICES

301 Irrigated Practice 15
302 Organic Certified & Organic Transitional Practices 24
303-400 (Reserved)

PART 4 INSUREDS CONTRACT INFORMATION

401 Notification of Prevented Planting or Notice of Loss 27
402 Delayed Notice of Loss 29
403 Review of APH Database (Production and Yield Report) 32
404 Review of Options & Endorsements 32
405 Review of Hail & Fire Exclusion 33
406 Review of Assignment of Indemnity 35
407 Review of Signature Authority 36
408-500 (Reserved)

PART 5 ACREAGE

Section 1 Acreage Report
501 Liability Adjustment Factor 37
502 Misreported APH or Practices/Types/Variety Within the Same Unit 42
503 Different Production Method Carried Out That Results In Lower Yield 42
504 Revision to Correct Uninsurable Acreage As Insured Acres 43
505 Unreported Acreage Which May Be Late Planted 43
506-520 (Reserved)

Section 2 Late Planting Coverage
521 General Information 45
522 Crops Having Late Planting Period Coverage 45
523 Per-Acre Production Guarantee 46
524-600 (Reserved)

PAGE NO

PART 6 FIRST, SECOND, & SUBSEQUENT CROPS PLANTED ON SAME ACREAGE IN SAME CROP YEAR

601 First (1st) Insured Crop Planted & Second (2nd) Crop 47
602 Reduction of Payments & Premium due to 2nd Crop 54
603 Indemnity Payment as it Relates to Double-Cropping History 55
604 Subsequent Planted Crops 62
605 Loss Adjustment 63
605 Loss Adjustment (Continued) 64
606 Production Worksheet Entries for 1st & 2nd Insured Crops 64
607 1st & 2nd Crop Questions & Answers 75
608-700 (Reserved)

PART 7 TYPES OF INSPECTIONS

Section 1 Indemnity Inspections

701 Preliminary Inspections 78
702 Final Inspections 79
703 Production Pre-measurement Service Inspections 93
704-720 (Reserved)

Section 2 Replanting Determinations

721 Replanted Crop 95
722 Replanting Payment Determinations 99
723-730 (Reserved)

Section 3 Special Contract Services

731 Growing Season Inspections 108
732 Pre-harvest Inspections 108
733 Crop Inspection to Determine Acceptance of Misreported Acreage Report Information .. 109
734-800 (Reserved)

PART 8 INSPECTION DUTIES & RESPONSIBILITIES

Section 1 General Information

801 All Inspection Types 112
802 Verifying Acreage Report Information at Loss Time 113
803 Verifying Insurable Acreage 115
804 Verifying Insured Crop 116
805 Verifying Unit Structure 116
806 Verifying Insurable Share 117
807 Resolving Share Discrepancies 120
808-820 (Reserved)

LOSS ADJUSTMENT MANUAL STANDARDS HANDBOOK
TABLE OF CONTENTS

PAGE NO

Section 2 Acreage Determination
821 General Information & Methods 121
822 Wheel Measuring Method 131
823 Determining Insured Acres from Skip-row Planting Patterns 135
824-830 (Reserved)

Section 3 Certification Form
831 General Information & Responsibilities 137
832-840 (Reserved)

Section 4 Verifying Cause of Loss
841 General Information 141
842 Hail & Fire Exclusion 141
843 Uninsured Causes of Loss 141
844 Abandon Versus not Following a Good Farming Practice 143
845-900 (Reserved)

PART 9 ESTABLISHING PRODUCTION

Section 1 General Information
901 Insured & AIP Responsibilities 145
902 Verifying Total Appraised or Harvested Production 146
903 Bypassed Acreage 149
904 Gleaned Acreage 152
905-920 (Reserved)

Section 2 Appraisals
921 General Information 156
922 Appraisal Method Modifications & Deviations 163
923 Appraisals Involving Average Row-width Measurements 163
924 Representative Sample Area Appraisals 164
925-930 (Reserved)

Section 3 Verifying Production
931 Verifying Harvested Production 175
932 Verifying Sold or Commercially Stored Production 178
933 Verifying Fed Production 183
934 Verifying & Accounting for Production Not to Count 184
935-1000 (Reserved)

LOSS ADJUSTMENT MANUAL STANDARDS HANDBOOK
TABLE OF CONTENTS

PAGE NO

PART 10 DETERMINING AND RECORDING THE QUALITY OF FARM STORED PRODUCTION

1001 Determining & Recording Farm-Stored Production that Requires Measurements 186
1002 Production Weighed & Farm-Stored 187
1003 Authorization to Accept Insured's Structure Markings, Load Records, & Combine Monitor Records 193
1004 Determining Amount of Grain Stored in Grain Bags 201
1005 Recording Farm-Stored Production on the Production Worksheet 203
1006 Farm-stored Production-to-count Formula 206
1007 Gross Cubic Feet Formulas by Structure 207
1008 Gross Cubic Feet Formulas for Unusual Storage Configurations 210
1009 Net Cubic Feet Formula (Cubic Feet Deductions) 216
1010-1100 (Reserved)

PART 11 ADJUSTMENTS TO PRODUCTION

1101 General Information 217
1102 Quality Adjustment 218
1103 Adjustments for Moisture 245
1104 Adjustments for Foreign Material & Dockage 246
1105 Consolidating Same Moisture, Foreign Material, or Dockage Percentage Entries 250
1106 Averaging Moisture or Foreign Material Percentage Entries 250
1107 Test Weight & Test Weight Factor 251
1108 Flooded Crops 253
1109 Quality Adjustment when Production Contains Mycotoxins, Other Substances, or Conditions at Levels Injurious to Human or Animal Health 254
1110-1200 (Reserved)

PART 12 UNUSUAL/CONTROVERSIAL CASES & SPECIAL CLAIMS PROCEDURES

Section 1 General Information
1201 General Procedures Involving Unusual or Controversial Cases 277
1202 Report Writing 277
1203 Dealing with Problem Cases 278
1204 Controversial Claim Procedure 279
1205 Pesticide or Other Chemical Substance Hazards 281
1206-1220 (Reserved)

Section 2 Unusual/Controversial Cases
1221 Controversial Claim: Uninsured Causes of Loss 282
1222 Claims for Indemnity Involving Suspected Concealment or Misrepresentation 290
1223-1230 (Reserved)

PAGE NO

Section 3 Special Claims Procedures

1231 Third Party Cause of Loss 291
1232 Claims Involving Fire Damage 291
1233 Commingled Production 296
1234 Unreported Units 305
1235 Claims Involving Severe Wildlife Damage, Insect, Disease, or Weed Infestation 308
1236 Airplane or Broadcast-seeded Barley, Oats, Rye, or Wheat 309
1237 Severe Wind Erosion 310
1238 Corrected Claims 311
1239 Documenting Insured's Death after Insurance Attached & There is a Claim 314
1240 Bankruptcy 314
1241 Modification of Requirement to Destroy Crop Before Indemnification 315
1242 Chemical Damage due to Adverse Weather Condition 316
1243 Simplified Claim Process 316
1244 Large Claim Reviews & FCIC Participation 320
1245-1300 (Reserved)

PART 13 FARM SERVICE AGENCY

1301 Farm Service Agency Information 321
1302 Information Requests to Farm Service Agency 321
1303 Obtaining Requested Documents from Farm Service Agency 323
1304 Verification Materials/Information 323

LOSS ADJUSTMENT MANUAL STANDARDS HANDBOOK
TABLE OF CONTENTS

PAGE NO

EXHIBITS

1 Acronyms and Abbreviations 325
2 Terms and Definitions 328
3 Causes of Loss 329
4 Hail/Fire Exclusion Appraisal Factor Chart 333
5 Reserved 336
6 Claim Checklist Form Standards 337
7 Certification Form Standards and Completion Instructions 339
8 Self-certification Replant Worksheet Form Standards & Completion Instructions 342
9 Square Root Table 346
10 Round Bin Conversion Chart 347
11 Notice of Prevented Planting or Notice of Loss Standards 356
12 Production Worksheet Continuation Sheet Form Standards 360
13 FGIS (or Applicable State or Other Entity) Definitions for FM & Dockage 361
14 Calculation Sequence of Liability Adjustment Factor & 1st/2nd Crop Reduction 366
15 Instructions for Determining Tree/Vine/Bush Acres 368
16 Settlement of Claim When Insured has less than 100% Share 373
17 SCP Form Completion Instructions 382
18 GSI Report Standards & Completion Instructions 390
19 Rounding Rules 393
20 Table to Convert Fractions to Percent Figures 394
21 Metric Conversion Table 395
22 Converting Volume to Bushels, Hundredweight, or Pounds 396
23 Unit of Measure of Production and Standard Weight Per Unit, by Crop 397

PART 1 GENERAL INFORMATION

1 Purpose

A. Purpose of the Handbook

This handbook is the official publication of the RMA for all levels of insurance provided under the FCIC program unless a specific crop (or commodity) LASH or insurance standards handbook or guide for a specific plan of insurance (e.g., ARPI plan, Rainfall Index or Vegetation Index plans of insurance, etc.) specifies that none or only specified parts of this handbook apply. Insurance policies available under the FCI program are sold and serviced by private insurance companies (hereafter called AIPs) reinsured by FCIC.

If an AIP is audited by a government agency or is selected for an RMA compliance review, the applicable procedures in this FCIC-issued handbook will be the basis for all determinations.

(1) This handbook identifies standards (requirements):

(a) for general loss adjustment (not crop-specific) for adjusting losses in a uniform and timely manner;

(b) for the general loss adjustment process (e. g., assignment of indemnities, notices of loss, acreage determination, revising ARs, etc.);

(c) for completing policy-related inspections for the crop year (e.g., GSIs, pre-harvest inspection, etc.); and

(d) that are not adjuster specific, but are an overall part of the loss adjustment process for which the AIP (rather than the adjuster) is responsible; e.g., procedural standards for requesting appraisal deviations and modifications, etc.

(2) The standards contained in this handbook are to be used with:

(a) The insurance standards handbooks or guides for a specific plan of insurance, unless these handbooks or guides specify otherwise, as stated above;

(b) PPSH (when applicable); and

(c) Crop specific LASH (e.g., Almond LASH) unless specified otherwise, as stated above.

B. Source of Authority

Federal programs enacted by Congress and the regulations and policies developed by RMA, USDA, and other Federal agencies provide the authority for program and administrative operations; and basis for RMA directives. Administration of the FCI program is authorized by the following:

B. Source of Authority (continued)

(1) The Federal Crop Insurance Act, 7 U.S.C. 1501
(2) The Food Security Act of 1985, 16 U.S.C. 3801 et seq.
(3) Controlled Substance Act of 1970, 21 U.S.C. 801 et seq.
(4) Personal Responsibility and Work Opportunity Reconciliation Act of 1996, 42 U.S.C. 653a
(5) 7 CFR part 400
(6) SRA

C. Title VI of the Civil Rights Act of 1964

Information regarding Title VI of the Civil Rights Act of 1964 and the program discrimination complaint process is available on the RMA public website at www.rma.usda.gov/en/Topics/Civil-Rights.

2 Special Instructions

A. Titles

Specific titles of AIPs' approving officials for which certain events, function, etc., would require the approving official's approval are not indicated in this handbook. However, for specific events, functions, etc., that require FCIC approval, titles of approving offices (or officials) are stated.

B. Forms and Specific Entry Instructions

AIP forms must meet the standards stated in the DSSH (FCIC-24040). The current Non-Discrimination Statement and Privacy Act Statement can be found on the RMA website at www.rma.usda.gov/About-RMA/Laws-and-Regulations/Required-Statements. Any changes to the forms shown in an updated FCIC LAM standards or FCIC crop LASHs require the same changes on AIP forms or trade-association-developed forms used by AIPs.

When item numbers for entry instructions on a loss adjustment form in any FCIC-issued LASH do not correlate with the item numbers on the AIP's form, AIPs may change the item numbers (only) for the entry instructions to agree with the item numbers on their form.

C. Procedures

The SRA states: "Procedures mean the applicable handbooks, manuals, bulletins, memorandums or other written directives issued by FCIC related to the eligible crop insurance contract and the Agreement." Procedures issued by FCIC means issued by the RMA for FCIC. Section IV. (f)(1)(B). of the SRA states: "The company shall use contracts, standards, FCIC procedures, methods, and instructions as authorized by FCIC in the sale and service of eligible crop insurance contracts." Any FCIC-issued procedures take effect on the approval date of the procedure. For LASHs, the approval date is always found at the top of the TP 1 page.

A. Regulations or Procedural Conflict

If there is a conflict between any FCIC-issued regulations, provisions, or procedures, the order of precedence is listed in the GSH. All FCIC regulations, provisions, procedures and interpretations of FCIC regulations, provisions, and procedures issued by RMA listed in the GSH take precedence over policy provisions, procedures or any clarification, interpretation of policy provisions or procedures or other materials distributed by an association or AIP.

B. Procedural Questions

(1) Questions regarding loss adjustment procedures in this handbook are to be directed:

(a) to the AIP; then, if not resolved,
(b) through appropriate channels within the AIP to RMA's PASD by e-mail at rma.LAM@usda.gov or in writing at the following address:

Office of Deputy Administrator for Product Management
Product Administration and Standards Division
USDA—Risk Management Agency
Beacon Facility—Mail Stop 0812
P.O. Box 419205
Kansas City, MO 64141-6205

Note: RMA will not attempt to instruct agents or insureds of the AIP.

(2) If a perceived error is identified, notify RMA by e-mail at rma.LAM@usda.gov or in writing at the above address.

Clearly identify the error and provide the proposed correction. If RMA determines the error identified is significant, RMA will issue a correction either in the existing crop year through a slipsheet to the LAM or a memorandum/bulletin. Conversely, if RMA determines the error identified is not significant, the correction will be included in the subsequent issuance of the LAM.

(3) For disputes involving procedural interpretations, refer to the GSH.

C. These Standards Remain in Effect Until Superseded

The issuance of an entire handbook will replace a previous handbook. Handbook amendments, FADs, or RMA Manager's Bulletins that change any part of this handbook will supersede that part of the handbook. AIPs may find it necessary to provide additional internal guidelines or procedures for their loss adjustment functions, such as where completed loss forms are forwarded, specifying specific form numbers and item numbers, etc. Additional guidelines or procedures must comply with FCIC-issued regulations, standards, and procedures.

4 Document Procedures

A. What Can Be Used

Refer to subparagraph 2B and C above for forms and procedures. Other than the AIP's name and policy number, policies issued by AIPs must be exactly as those published in the Federal Register, and thereafter published in the CFR.

B. Documents and Procedures

Forms (and/or data processed from forms) and manuals necessary for loss adjustment include, but are not limited to:

(1) Data from accepted applications and ARs. This data would include (but is not limited to) the following: insured's name as accepted on the application, authorized representative, price election, level of coverage, SSN or EIN, approved APH yields, acres, types, practices, shares, etc., reported for the crop;

(2) Insurance policy (BP, CP, applicable endorsements or options, WA, if applicable, SP, and FADs) applicable to the inspection;

(3) Actuarial documents;

(4) RMA bulletins, information memorandums, other related memorandums;

*** (5) LAM (FCIC-25010) and any Interpretation of Procedures;

Due to the nature of some insurance products such as livestock, certain revenue products, etc., there may be other issuances of underwriting guidelines (procedures) or general loss adjustment procedures, specific to each of those insurance products that are used in lieu of all or parts of the LAM.

*** (6) Specific crop LASH and any Interpretation of Procedures;

(7) Notice of PP or NOL; and

(8) Forms (or data from forms) meeting FCIC-issued form standards (refer to subparagraph 2B) applicable to the type of inspection and crop(s) being inspected; e.g., appraisal worksheets, Certification Form, PWs, etc.

5 Multiple USDA Benefits & Dual Participation

Any amount received for the same loss from any USDA program, in addition to the crop insurance payment will not exceed the difference between the crop insurance payment and the actual amount of the loss, unless otherwise provided by law. The amount of the actual loss is the difference between the total value of the insured commodity before the loss and the total value of the insured commodity after the loss.

FSA or another USDA agency, as applicable, will determine and pay the additional amount due the insured for any applicable USDA program, after first considering the amount of any crop insurance indemnity.

(1) For crops for which RP is not available:

(a) If the insured has an approved yield the total value of the crop:

(i) before the loss is the insured's approved yield times the highest price election for the crop; and

(ii) after the loss is the insured's PTC times the highest price election for the crop.

(b) If the insured has an amount of insurance the total value of the crop:

(i) before the loss is the highest amount of insurance available for the crop; and

(ii) after the loss is the insured's PTC times the price contained in the CP for valuing PTC.

(2) For crops for which RP is available and the insured elects:

(a) YP the total value of the crop:

(i) before the loss is the insured's approved yield times the applicable projected price (at the one hundred percent (100%) price level) for the crop; and

(ii) after the loss is the insured's PTC times the applicable projected price (at the one hundred percent (100%) price level) for the crop.

(b) RP the total value of the crop:

(i) The total value of the crop before the loss is the insured's approved yield times the higher of the applicable projected price or harvest price for the crop. If the insured has elected the harvest price exclusion, the applicable projected price for the crop will be used; and

(ii) The total value of the crop after the loss is the insured's PTC times the harvest price for the crop.

6-200 (Reserved)

PART 2 RESPONSIBILITIES

201 AIP Responsibilities

The AIP is responsible for all loss adjustment responsibilities outlined in this handbook whether the requirement is performed by a contracted adjuster, employed adjuster, or other AIP employee.

(1) The AIP and other parties involved with FCIC's crop insurance program are to administer the general loss adjustment in accordance with the procedures provided in this handbook and in conjunction with the following issuances:

(a) FCIC-issued crop LASHs (including the PPSH) and FCIC-issued Underwriting Guides (handbooks), any FCIC-issued amendments that supersede any portion of this handbook or crop LASHs, and any Interpretation of Procedures;

(b) Appendix IV of the SRA for AIPs to meet the minimum guidelines, procedures and performance standards that FCIC expects to be used in training agents and adjusters; and quality assurance functions.

(c) FCIC-Appendix III to the SRA Handbook for PASS data elements, data requirements, and edits;

(d) WAH (FCIC-24020) for WA standards;

(e) GFP Determination Standards Handbook (FCIC-14060) for GFP determinations;

(f) CIH (FCIC-18010) and GSH (FCIC-18190) for general underwriting and administrative standards that apply across all plans of insurance;

(g) Any RMA bulletins, informational memorandums, or memorandums pertinent to loss adjustment; and

(h) Applicable policies, BP, CP and any applicable FADs, AD, applicable options or endorsements, and applicable approved WA that are in effect for the crop policy being inspected.

(2) Responsibilities include (but are not limited to) the following:

(a) Comply with and implement the loss adjustment standards and loss-related form standards and form completion instructions established by FCIC, through FCIC LASHs and/or the DSSH issued by RMA's PASD, or as otherwise specified in writing by FCIC;

(b) Comply with all other requirements issued by FCIC in the administration of contracts between the AIP and FCIC; and

(c) Ensure that all documentation, determinations, and calculations are completed as specified in FCIC policy provisions, LAM Standards Handbook, crop LASHs, and all other applicable FCIC issuances.

(d) Provide input to FCIC regarding the loss adjustment standards.

(e) Advise RMA's PASD of impending situations which may necessitate the development of procedures, form standards, or calculations that are different than those identified in the FCIC-issued standards.

(f) Provide the adjuster with the insurance contract forms (or data from the processed forms) and procedures identified in the GSH.

(g) In addition to the responsibilities identified in this handbook, determine or verify whether crop-specific contract provisions or requirements (identified in the crop LASHs) apply to the insured, and if so, whether they have been complied with by the insured.

(h) Ensure that the adjuster has necessary equipment, is trained in its operation, and that such equipment is in proper working order to perform loss adjustment duties.

(i) Ensure that there is no conflict of interest with anyone involved in the loss adjustment of a claim as outlined in the SRA.

(j) Prior to the loss adjustment inspection, the AIP should:

(i) review the Summary of Coverage against the data on the AR;
(ii) reprocess the AR if keying errors are found prior to assigning the loss; and
(iii) notify the insured that a new Summary of Coverage will be issued with the correct data.

(k) Ensure that the required information (i.e., entry instructions) specified in FCIC-issued loss adjustment standards (LAM, LASHs, or any other applicable procedures) is recorded on the specific forms, printouts, or on a Special Report attached to the appropriate form.

(l) Maintaining and retaining records for claims in accordance with the criteria in section (g) of the SRA.

(m) The AIP must ensure before settlement of any claim on which the insured is shown as having a new producer status for the crop, that:

(i) Qualification for the new producer status has been verified to be correct; and
(ii) In addition to item (l) above, AIPs must maintain documentation in the insured's claim file substantiating the AIP's determination (made at the time of underwriting) that an insured qualifies for new producer status.

(3) Before any loss adjustment or contract service can be initiated, verify that the insured and all who have an interest of ten percent (10%) or more are eligible for insurance and the entity is legal.

(4) Unless otherwise specified, the BP (or as applicable, CP) state that simple interest will be paid from the 61st day on the net indemnity after the insured signs, dates, and submits the properly completed claim (if the reason for failure to pay within 60 days is not due to the insured's failure to provide information).

(5) FCIC has identified the following types of claim situations on which interest should be paid from the 61st day of the adjuster or approving officer's signature date rather than the insured's signature date. The claim situations are as follows:

(a) Certification Form has been used on the unit.
(b) Controversial or other unusual type of claim.
(c) The insured is an absentee insured (adjuster will enter the date when the PW was mailed to insured for signature in the Narrative).

202 Loss Adjustment Responsibilities

The following responsibilities and procedures throughout this handbook apply to whoever is performing loss adjustment whether it is an AIP employee whose primary duty and title is not adjuster or a person under contract or employed with an AIP specifically as an adjuster. For example, some AIPs may have employees whose primary function is not loss adjustment activities (e.g., underwriter) but this employee makes some loss adjustment verifications prior to assignment or after assignment of the NOL to the adjuster. Additionally, some AIPs may have non-loss adjuster employees perform certain types of reviews or loss adjustment assignments found in this handbook. Sales Agents, local agency employees, or sales representatives (other than taking notices of loss or as otherwise specified in this handbook) cannot perform loss adjustment duties unless outside of their selling and servicing area as described in the SRA.

Responsibilities include (but are not limited to) the following:

(1) Be thoroughly familiar with the insured's contract folder or print-out supplied by the AIP showing the insured's coverage in effect, and all insurance documents (or data documents) that pertain to the insured's insurance contract in the county; e.g., BP, applicable CP, any applicable endorsement or option provisions in effect for the crop year, WA information (if applicable), SPs, reported AR information, etc. Refer to the GSH for a general overview of the different insurance plans.

(2) Verify and/or determine and document the information as specified in this handbook or other FCIC-issued procedures necessary for loss adjustment. Document information as specified in this handbook or other forms of issuance approved by RMA's PM or PASD, or RMA Manager's Bulletins.

(3) Use loss forms that meet FCIC form standards and procedures as outlined in subparagraphs 2B and 2C. All FCIC-issued procedures take effect on their approval date. For the LAM and crop LASHs, the approval date is always found at the top of the TP 1 page. The LAM
*** and all FCIC LASHs for the applicable crop year are found on RMA's website (or its successor) at www.rma.usda.gov. Do not deviate from FCIC-issued procedures without prior written approval from FCIC. The AIP will provide the appropriate parties with any FCIC-approved deviations.

(4) Use and be proficient with the applicable loss adjustment equipment.

(5) Identify the type of inspection that will be made. Refer to Part 7 for Types of Inspections.

(6) Explain to insureds their contractual responsibilities, filing procedures, and what will be done during the inspection.

(7) Visit farms for the purpose of inspecting damaged or destroyed crops during the growing season or following harvest. Surveying, GPS, PFTS, and remote sensing devices may be used, during the farm visit, in conjunction with aerial photos or satellite imagery to assist in making inspections and determinations.

(8) During farm visit:

(a) Determine and/or verify any insured and uninsured causes of loss. Establish production or dollar amount to count from appraisals for uninsured COL.

(b) Determine and/or verify the time of loss.

(c) Review and verify the AR information as described in part 5, section 1.

(d) Inspect insured crops and establish all harvested, UH, and potential production for all units of each crop being inspected in accordance with Part 9. Determine (measure, if applicable) all farm-stored production from the loss units of the crop being inspected in accordance with Part 9.

(e) Determine (measure if applicable) the insurable acreage of the loss unit or as required in any other type of inspection.

(f) Determine if there is any unreported insurable acreage. If any is found, take appropriate steps, as found in this handbook.

(g) Inspect acreage to determine and verify correct FSA FNs, legal descriptions, classifications, planting dates, planting practices, inputs, and whether proper planting and care of the crop was carried out as it pertains to fertilizer, herbicides, irrigation (when applicable), etc.

(h) Appraise potential production and grant written consent to replant or put insured acreage to another use when the insured is not going to carry the crop to harvest as described in paragraphs 921 and 924.

(i) Perform APH review responsibilities as defined in paragraph 403.

(j) Perform on-the-farm inspections in accordance with procedures in this handbook and applicable crop LASHs.

(k) Cooperate with the insured while working in and around his/her property.

(9) Review information from any previous inspection for the crop being inspected, including information documented on Special Reports.

(10) Verify the insured's entity and share are correct. Verify whether the entity is married and, if so, whether the spouse's SSN/EIN has been provided to the AIP as stated in the GSH.

(11) During a loss inspection, review documents, records, etc., that would show the correct entity, share, legal description and/or FNs, and acres. As stated in paragraph 1304, FSA records do not have to be used for verification purposes, unless information needed to complete loss adjustment can only be obtained from FSA. However, such verification at FSA is recommended as an additional verification source since AIPs must ensure that producer-certified information is accurate and that liability is established and indemnities are paid according to FCIC-issued policies and procedures and any related Agency policy or procedural interpretations.

(12) If the actuarial classification appears to be incorrect, adverse, or unusual risk conditions exist, prepare a Special Report with details and forward to the AIP. The AIP can then request an actuarial review or prepare a Request for Actuarial Change.

(13) During an indemnity inspection, explain what the insured's options are under the terms and conditions of the contract, but in no way provide advice or suggestions that could affect the insured's decision concerning these options; e.g., do not advise or suggest whether to carry the crop to harvest or go to another crop, etc.

(14) Do not provide any advice or suggestions to the insured regarding the insured's farming operation; e.g., type and application of chemicals, herbicides, tillage, etc. If the insured solicits your advice, advise the insured to consult with an agricultural expert.

(15) Advise insureds that a routine quality assurance review may be made to ensure the loss adjustment was done in a fair and impartial manner, and in accordance with contract terms.

(16) Prior to obtaining the insured's (or authorized representative's) signature on the PW:

(a) Review all entries on appraisal worksheets and PWs with the insured;
(b) Explain any circumstances that may affect the indemnity; and
(c) Explain the Certification Statement on the PW and that the insured's (or authorized representative's) signature represents the insured's certification that the information on the PW is complete and accurate. Do not sign a final replant payment or final claim for indemnity (including PP payment) until satisfied with all determinations.

(17) Use a Claim Checklist (similar to the one shown in exhibit 6) when instructed by the AIP.

(18) Do not discriminate against any insured because of race, color, religion, sex, age, disability, marital status, national origin, or sexual orientation.

(19) Do not solicit or accept money, gifts, or favors from any party that are designed to influence (or give the appearance of influencing) any loss adjustment finding or decision.

(20) Do not use your position to gain favor, influence, or financial advantage over any insured or individual.

(21) Adjusters must provide written consent (not verbal consent, unless specified otherwise in these procedures) to the insured when the adjuster is releasing acreage to:

(a) destroy the insured acreage;
(b) put the insured acreage to another use;
(c) replant the insured acreage (only for crops having replant provisions); or
(d) abandon the insured acreage.

(22) Before a replanting, PP, or claim for indemnity is finalized, verify the insurability requirements of the crop and acreage; e.g., one of the insurability requirements of acreage is that the acreage upon which the insured crop is planted has had a crop planted and harvested or insured in one of the three previous crop years, unless it meets the exceptions, as stated in the CIH. Also, refer to the CIH for additional reasons that acreage would not be insurable. Insurability requirements for a crop can be found in the CIH, CP if applicable, or SP.

(23) When there is contained water, verify and document the elevation of the contained water at the time of loss. Refer to subparagraph 843(6)(c) for details.

(24) Loss Adjustment Form corrections.

(a) If during the time of loss adjustment the adjuster makes a correction on a loss adjustment form, the adjuster will follow the instructions for making corrections in the Section entitled PW Entries and Completion procedures in the applicable crop LASH.

(b) If a claims reviewer or auditor makes a correction on the claim for indemnity form prior to processing it for payment, the auditor/reviewer will:

(i) Line through the incorrect information and replace with the correct information,
(ii) Initial and date the correction/change, and
(iii) Document on an attached Special Report the reason why the correction/change was needed.

(c) The AIP should notify the insured of any correction/change if the correction/change results in a reduced Indemnity Payment, Replant Payment, or PP Payment, if applicable.

(25) It is often helpful on a farm inspection to document the conditions of the crop with photographs or videos. Using photographs or videos can reduce the volume of written documentation to explain certain situations, substantiate crop conditions, field or stubble conditions and presence of hidden production, can simplify documentation of complex situations by use of easily understood images, and serve to document the exact date, time, and GPS location of the field depicted in the photo. In some cases, photographs or video filming of neighboring fields of the same crop, type, variety, grown on same soil type, etc., are useful for comparison purposes.

If photographic or video evidence is used to support a claim:

(a) Each photo must include embedded GPS coordinates or, if embedded GPS coordinates cannot be obtained due to the limitations of the camera being used, each photo must contain an identifiable object in the background to show where the picture was taken (e.g., buildings, tree grove, etc.);

(b) The use of color photographs is encouraged;

(c) Take photographs or video in a straightforward, open manner to avoid giving the appearance of being secretive or suspicious. There may be occasions when resentment or disapproval of the use of photographs or videos is expressed. In such cases, contact the next level of supervision for a decision on whether to proceed with the photographs or videos; and

(d) Document photographs and video using a log to show the following pertinent information (also narrate on video): Date/time taken, the location where taken (legal description, GPS location, etc.) and by whom, the subject matter depicted, direction of view, contract, and unit number, etc. The log should be initiated at the time the photograph or video is taken, and the photo, and the photo number should correspond with the print number. Photographs and videos should always depict a reference of the nearest identifiable intersection (document estimated distance to subject field), an integrity picture of the entire field or concerned area, and then close-up photographs (video) identifying the condition. Reference and integrity photographs should always include permanent landmarks when possible. Identify any individual that appear in photographs or videos. Attempt to include the insured or representative in the photograph or video, in the field.

(26) Include in the insured's loss file, all documentation used to verify or support determinations as specified in this paragraph.

(27) When the MCEU endorsement is in effect, applicable loss adjustment determinations and calculations are handled in accordance with current procedure for EUs. References to EUs and EPs in the LAM are applicable to MCEUs. Refer to the CIH for more information regarding MCEUs.

203 Insured's Responsibilities

Besides the requirement to provide notice when damage occurs, the BP requires the insured to:

(1) Protect the crop from further damage by providing sufficient care.

(2) Cooperate with the AIP in the investigation or settlement of a claim, and as often as the AIP reasonably requires:

(a) Show the AIP the damaged crop;
(b) Allow the AIP to remove samples of the insured crop; and
(c) Provide records and documents requested and permit the AIP to make copies.

(3) Establish:

(a) The total production or value received for the insured crop on the unit;
(b) That any loss occurred during the insurance period;
(c) That the loss was caused by one or more of the insured causes specified in the CP; and
(d) That he/she has complied with all provisions of the BP.

(4) Obtain consent from the AIP before, and notify the AIP after:

(a) Destroying any of the insured crop that will not be harvested,
(b) Putting the insured crop to an alternative use,
(c) Putting the acreage to another use, or
(d) Abandoning any portion of the insured crop.

(5) Leave UH RSCs intact in accordance with the BP and/or CP. For additional information for RSCs, refer to subparagraph 902B.

(6) Submit a claim declaring the amount of the insured's loss by the dates specified in the BP. For additional information, refer to paragraph 702.

(7) Provide a complete harvesting, production, and marketing record of each insured crop by unit including separate records showing the same information for production from any acreage not insured.

(8) Separate records of production for 1st and 2nd crop acreage. Refer to paragraphs 601 for additional information.

(9) The insured must retain complete records of the planting, replanting, inputs, production, harvesting and disposition of the insured crop on each unit for three years after the end of the crop year. This requirement also applies to all such records for acreage that is not insured. The insured must also provide those records upon the AIP's request or the request of any employee of USDA authorized to investigate or review any matter relating to crop insurance.

(10) The insured is not required to maintain records beyond the record retention period. However, if the AIP or FCIC has evidence that the insured or anyone assisting the insured knowingly misreported any information related to any yield the insured certified, the AIP or FCIC will replace all yields in the insured's APH database determined to be incorrect with the lesser of an assigned yield determined in accordance with section 3 of the BPs or the yield determined to be correct.

(a) If an overpayment has been made to the insured, the insured will be required to repay the overpaid amount; and

(b) Replacement of yields in accordance with section 21(b)(3) of the BP does not exempt the insured from other sanctions applicable under the terms of the policy or any applicable law.

(c) By the insured signing the application for insurance authorized under the Act or by continuing insurance for which the insured has previously applied, the insured authorizes the AIP or USDA, or any person acting for the AIP or USDA authorized to:

(i) Investigate or review any matter relating to crop insurance; and

(ii) Obtain records relating to the planting, replanting, inputs, production, harvesting, and disposition of the insured crop from any person who may have custody of such records, including but not limited to, FSA offices, banks, warehouses, gins, cooperatives, marketing associations, and accountants.

The insured must assist in obtaining all records the AIP or any employee of USDA authorized to investigate or review any matter relating to crop insurance requests from third parties.

(d) If the insured fails to provide access to the insured crop or the farm, authorize access to records maintained by third parties, or assist in obtaining such records, it will result in a no indemnity due for the crop year in which failure occurred.

(e) If the insured fails to maintain or provide records, the provisions of section 21(f) (and (g), if applicable) of the BP will apply.

204-300 (Reserved)

PART 3 PRACTICES

301 Irrigated Practice

A. Coverage and Documentation

(1) The following are covered under an IRR practice, when due to an insured COL listed in the CP, there is:

(a) failure of the irrigation water supply;
(b) failure or breakdown of the irrigation equipment or facilities, or
(c) an inability for the insured to prepare the land for irrigation using the insured's established irrigation method (e.g., furrow irrigation). The insured must make all reasonable efforts to restore the equipment or facilities to proper working order prior to the FPD or the end of the LPP, if applicable, unless the AIP determines it is not practical to do so. Cost will not be considered when determining whether it is practical to restore the equipment or facilities.

(2) Under the terms of the policy, the burden is on the insured to show that any loss on annually planted (or perennial) acreage was caused by an insured COL. Insured's documentation must:

(a) include any of the items covered in item (1) above;

(b) show that such failure was caused by an insured COL that occurred during the insurance period, and

(c) demonstrate that the insured has the physical resources, other than water, used to regulate the flow of water from a water source to the acreage. This includes pumps, valves, sprinkler heads, and other control devices. It also includes pipes or pipelines which:

(i) are under the control of the insured, or
(ii) routinely deliver water only to acreage which is owned or operated by the insured. A center pivot system is considered irrigation equipment and facilities.

(3) AIPs/adjusters must verify and document:

(a) that the insured qualified for an IRR practice (refer to the DSSH);
(b) if the condition(s) for an irrigated practice outlined in item (1) above apply; and
(c) any other information pertinent to the case.

A. Coverage and Documentation (continued)

(4) If due to an insured COL the surface water (e.g., river) level has decreased to the point that the insured's existing equipment cannot lift the amount of water historically lifted to adequately irrigate the crop (even if the pumps run 24 hours per day) the insured is not expected to take extraordinary measures to modify their irrigation facilities to deliver adequate irrigation water to their crop(s) such as:

(a) placing other equipment not usually used such as extra runs of irrigation pipe; or
(b) purchasing more expensive or larger motors or lift stations.

(5) Insureds are required to keep separate production records for acreage insured under the IRR practice from acreage insured under a practice other than IRR (or with no practice applicable) and uninsured acreage.

B. Uninsurable Causes of Loss

(1) Increased costs for water, electricity, fuel, etc., from sources (reservoir, etc.) historically used by the insured are not considered insurable COL under the policy. Any acreage for which the irrigation water supply has been reduced by the insured before insurance attached because of such increased costs is not insurable under an IRR practice and no PP payment or indemnity payment may be made. The insured's reduction of irrigation water after insurance attaches because of increased costs is also an uninsured COL.

However, an insured would not be denied a claim if the insured did not purchase high-cost water, electricity, fuel, etc., that was available to them from sources from which the insured does not historically purchase these products or services.

(2) Any reduction in the water supply due to participation in an electricity buy-back program or the sale of water under a water rights buy-back program (either before or after insurance attaches) is not considered an insurable COL under the policy. However, if an insured COL reduces the amount of irrigation water available, then subsequent participation in an electricity buy-back program (relative to the amount of water reduced by an insured COL) will not reduce the insured loss.

(a) Insureds that elect to participate in electricity buy-back programs or water rights buy-back programs that result in a reduction of the irrigation supply before insurance attaches cannot insure any acreage affected by this reduction in the irrigation water supply as an IRR practice or receive a PP payment on an IRR basis for such acreage.

(b) Insureds that elect to participate in electricity buy-back programs or water rights buy-back programs that result in a reduction of the irrigation supply after insurance attaches may not receive an indemnity related to the reduction in the irrigation water supply.

B. Uninsurable Causes of Loss (continued)

(c) In those cases where an insured COL reduced the irrigation water supply for a portion of the insured's acreage and the insured elects to participate in the electricity buy-back programs or water rights buy-back programs, the AIP must separately determine the amount of acreage for which:

(i) an insured cause reduced the irrigation water supply, and

(ii) participation in the electricity buy-back programs or water rights buy-back programs caused the reduced irrigation water supply. The insured may still be eligible for a PP payment or indemnity payment, as applicable, on the acreage where an insured COL reduced the irrigation water supply, provided that all other requirements in the policy have been met.

(3) Decreased water allocation resulting from the diversion of water for environmental or other reasons is not an insurable COL unless, the diversion is made necessary due to an insured COL. Refer to subparagraph C(7) below.

(4) Any reduction in water due to the insured transferring his/her water rights; e.g., transferring water right to another entity, even if the insured is involved in that entity, is not covered.

Example: A producer normally receives 100 units of water per year from two sources (50 units each) to irrigate 1,000 acres of land for a crop or crops for which failure of the irrigation water supply due to drought is a covered COL. The producer receives notice that due to reduced carryover water in the reservoir and diversion to other uses, the normal allocation is being cut by 20 units. Ten of the units cut are due to an ongoing drought (insurable COL). An additional ten units are being diverted by the Bureau of Reclamation to support the flow of water downstream to provide improved fish habitat (uninsurable COL). At the same time, the producer learns that the other water sources are doubling the cost of water due to increased demand by urban users. The producer calculates that only 30 units will be purchased from this source based on the increased price.

The producer will only have 60 units of available water for the year and must allocate or reduce the acreage accordingly. PP may only be reported and claimed for that acreage associated with the ten units of water decreased due to drought. Assuming one unit of water irrigates ten acres, the producer would have enough water for 600 acres and be permitted to claim PP on 100 acres. The acreage associated with the 30 units of water lost due to the government diversion and increased cost is not insurable under an IRR practice.

C. Determination and Administration Instructions

The following instructions are to be applied in determining the adequacy of the irrigation water supply and facilities, properly classifying acreage, and administering the standards. AIPs are to determine the adequacy of the irrigation water and facilities.

(1) The adequate quantity of irrigation water will be considered to be adequate only if the insured can demonstrate to the AIP's satisfaction that at the time insurance attached, there was a reasonable expectation of receiving an adequate quantity of water at the times necessary to carry out a good irrigation practice on the acreage insured under the IRR practice. Refer to subparagraphs A and B above.

(a) For the water quantity to be considered adequate, it also must be of sufficient quality to be acceptable for irrigation purposes (e.g., water with high salt content or other yield-limiting properties may not be acceptable for irrigation or may be acceptable only if the amount used will not restrict the ability of the IRR acreage to produce a normal crop). The local CES or NRCS should be utilized in making any necessary water quality determinations.

(b) Water quality is a characteristic of the water supply. Thus, failure of the water quality to be suitable for irrigation would be considered as failure of the water supply. However, to be insurable, such failure must be unavoidable and must occur during the insurance period (e.g., intrusion of saline water during the insurance period caused the irrigation water supply to be unsuitable for the crop). If the insured was or should have been aware of a water quality problem prior to the insurance period, the adequacy of the irrigation water at insurance attachment is suspect and must be determined in order for the IRR practice to apply.

(2) Irrigation facilities are considered adequate if it is determined that, at the time insurance attaches to planted or perennial acreage, they will be available and usable at the times needed and have the capacity to timely deliver water in sufficient quantities to carry out a good irrigation practice for the acreage insured under the IRR practice.

(3) Acreage properly insured under an IRR practice, which suffers a water shortage during the insurance period, must be managed consistent with GFPs to produce the best possible yield under the circumstances. Insureds must take appropriate actions to seek the best possible yields by utilizing farming practices which mitigate, as much as possible, the adverse impacts of insufficient irrigation.

(4) Deny IRR practice coverage on any acreage reported under the IRR practice, which is not eligible for that practice. If no other appropriate practice is available for the acreage, insurance will not be considered to have attached on the acreage.

C. Determination and Administration Instructions (continued)

(5) If the insured has not followed a good irrigation practice by giving irrigation priority to uninsured acreage that results in a loss of production to the insured crop, an appraisal must be made for that uninsured loss of production. (This does not apply to PP. Refer to the PPSH for situations where there is failure of the irrigation water and it involves insured and uninsured acres.)

Exception: Producers may allocate life-sustaining amounts of water to their perennial crop acreage, from which crops are produced from trees, vines, or bushes, to avoid long term losses to their operations, regardless of whether or not the perennial crop acreage is insured. Forage crops (grown for seed, grazing, or production) are not included in this exception.

(a) Insure such acreage at appropriate practice other than IRR if such a practice is available and the acreage qualifies for that practice. Otherwise, the acreage is not insurable.

(b) Insureds are to be instructed to keep production separate for acreage insured under the IRR practice, acreage insured under a practice other than IRR (or with no practice applicable), and uninsured acreage.

(6) If the acreage reported for insurance under the IRR practice exceeds the capacity of the irrigation facilities and/or water supply reasonably expected at the time of planting (or on the calendar date for the beginning of the insurance period for perennial crops), limit (reduce) the number of acres insured under the IRR practice to an amount which could have been adequately irrigated.

Example: An insured reports 100 acres under the IRR practice. It is later determined that, at the time insurance attached, the facilities or water supplies were adequate for only 75 acres but were used on the 100 acres.

Proceed as follows:

(a) Document the number of acres that are insurable as IRR (75 acres, in this case).

(b) Determine, to the extent practical, the highest yielding 75 acres to be the IRR acres, appraise any reduction in production on the 75 acres caused by applying the available water to the 100 acres, and enter the appraisal on the claim as an uninsured-cause appraisal.

(c) If only IRR acreage is insurable in the county for the crop, prepare a revised AR showing 75 acres insured under the IRR practice. Enter the 25 acres as uninsured acres, and explain the 25 acres are uninsurable acreage due to inadequate facilities and/or water supplies.

C. Determination and Administration Instructions (continued)

(d) If both IRR and NIRR acreage are insurable in the county for the crop, prepare any claim and/or revised AR in accordance with these procedures.

(e) If facts support misrepresentation of the reported practice by the insured, document the facts and handle the case under misrepresentation procedures.

(7) Although it is preferred that the insured notify the AIP in advance of any diversion of water from insured crops, failure to do so will not, in itself, result in appraisals for failure to carry out a good irrigation practice. However, advance notification allows the AIP the opportunity to verify the appropriateness of such diversion at the same time that the insured makes the decision to divert the water.

This subparagraph is intended primarily to address the insured's actions intended or taken to divert water. There may be situations in which the AIP determines that the insured should have, but did not, divert water or divert the recommended amount of water to acreage insured under the IRR practice. In such cases it may be appropriate to assess an appraisal for uninsured causes, unless it can be documented that justifiable circumstances prevented such diversion (e.g., multiple water sources or great distances between acreage, made diversion of water impractical or impossible).

(a) Water diversion within a crop, when all involved acreage is for the IRR practice:

(i) Verify that a water shortage exists or whether wind and extreme heat conditions have caused evaporation of the irrigation water before the water can reach all areas of the crop, thus, creating a need to irrigate only a portion of the crop that initially was being irrigated (e.g., instead of irrigating the entire pivot which is not receiving enough water to survive, irrigate only half of the crop so that at least this part will survive). Also, verify whether recommendations from local CES or NRCS (or other source recognized by CES, or NRCS to be an expert in this area) agree with the insured's intentions or actions taken.

Verification of water shortage is done by verifying the insured's water source and/or supplier (water district, etc.). Verify wind and extreme heat conditions by obtaining and documenting the data from the National Weather Bureau for the closest location to the insured acreage and/or other local sources that keep records of wind and temperatures. Based on this data obtain the recommendations of local CES or NRCS as stated above.

(ii) Determine that such diversion is appropriate. Recommendations from local CES or NRCS (or other source recognized by CES, or NRCS to be an expert in this area) should be used to document this determination.

C. Determination and Administration Instructions (continued)

(iii) Document (on an appropriate form) the insured's intention or action taken to divert water on the affected acreage. Include the circumstances affecting your determinations required by items (i) and (ii) above.

(iv) If the requirement in (ii) above is not met, consider this as failure to carry out a good irrigation practice for the insured crop, and assess any appropriate appraisal(s) representing the additional indemnification anticipated as a result of the diversion. Use appraised and/or harvested production figures, APH yields, etc., of the acreage or units involved as a guide to establish any appropriate uninsured-cause appraisals that may be necessary to assess against the acreage or unit from which the water was diverted.

(v) Inspect any acreage involved in the diversion and appraise any insured acreage that is not to be harvested.

(vi) Defer final settlement of claims of this type until total production on all involved acreage can be verified or determined.

(b) Water Diversion from One Crop Properly Insured Under the IRR Practice to Another Crop(s) Properly Insured Under the IRR Practice:

Reminder: Document the circumstances as in (a)(iii) above.

(8) Termination or reduction of production on perennial crops (tree/vine crops only) due to failure of the irrigation water supply after insurance attached. There is controversy over whether it is a recommended practice to terminate or reduce a developing perennial crop to enhance tree/vine survival. However, if an insured chooses to do so:

(a) Verify that a water shortage exists and that the local CES (or other source recognized by CES to be an expert in this area) has recommended that the insured terminate (remove) or reduce the crop on the affected acreage.

(b) Establish a zero per-acre appraisal on acreage for which the crop was completely removed as a recommended practice. If the crop is reduced, but not completely removed, the remaining production is counted in accordance with current procedures for the crop. That portion of the crop removed in accordance with recommendations from the local CES (or from other source recognized by CES to be an expert in this area) will not be PTC in determining any indemnity or for APH purposes.

(c) Verify crop termination or reduction at final inspection.

C. Determination and Administration Instructions (continued)

(9) If the insured fails to carry out a good irrigation practice on acreage properly insured at the IRR practice, assess an appraisal for uninsured causes representing:

(a) the loss of production due to failure to carry out a good irrigation practice, or
(b) not less than the guarantee for the acreage if the loss is due solely to uninsured causes.

(10) If a loss is evident, acreage reported as an IRR practice and that qualified as an IRR practice at the time insurance attached cannot be revised to a NIRR practice because the insured never applied any water. Refer to the GSH.

D. When Insureds Are Aware of Water Restrictions, Reductions, Etc.

Insureds who obtain evidence of decreased water allocation due to an insurable cause after insurance begins may report losses due to failure of the irrigation water supply in accordance with the policy provisions. Refer to subparagraph B above for information regarding insurability of certain causes resulting in water reduction; e.g., environmental, increased costs, buy-back programs, etc.

Instructions regarding insureds that are advised of (or should otherwise have been aware of) water restrictions, reductions, or diversions by water districts, municipalities, or other water regulatory agencies:

(1) For annual crops, if announcement or knowledge of such restriction, reduction or diversion occurs prior to insurance attachment, the insured will be expected to reduce planting accordingly, to plant other less-water-demanding crops, or to take other prudent actions necessary. However, if announcement or knowledge first occurs after insurance attachment, the acreage will be considered as insurable under the IRR practice, unless information on the situation was such that the majority of producers took prudent actions necessary. In such cases, all insureds under similar circumstances will be expected to do likewise.

(2) For perennial crops, producers seldom have the option to respond to such announcements or knowledge by reducing plantings, other than refraining from planting additional acreage and removing less productive or less desirable plantings. Producers may allocate life-sustaining amounts of water to their perennial crops (except forage crops) to avoid long-term losses to their operations, regardless of whether or not a perennial crop is insured. However, all other standards herein are to be followed to safeguard against adverse selection and other unacceptable risk exposure.

E. Properly Identifying Cause of Loss

(1) Drought cannot be a COL under an IRR Practice. AIPs are responsible for ensuring that damage and losses due to failure of the irrigation water supply are properly identified as such, and are not misidentified as drought, excessive heat, hot winds, etc. The AIP must not pay drought losses on acreage insured under the IRR practice, except where drought has caused the failure of the irrigation water supply, and in that instance, the COL code must be shown as failure of the irrigation water supply, not drought.

(2) COLs under a IRR practice that normally do not occur, heat, hot winds, etc., may be appropriate COL on acreage insured under the IRR practice, but the likelihood of such causes are less compared to NIRR acreage. However, under the right climatic conditions, hot dry winds may cause the amount of evaporation of IRR water to be so great that the IRR equipment cannot deliver the water at a fast enough rate to benefit the crop. Also, there have been instances where hot dry winds have affected the ability of a drip irrigation system to deliver water to the seed zone area or enough water to enable the water to remain long enough for the seed to germinate and/or develop an adequate root system to survive. It may be possible that similar effects are experienced with other IRR methods.

When such claims are made, the AIP must verify and document whether:

(a) other producers using the same type of irrigation system had the same problem; and

(b) the problem can be attributed to hot dry winds in the area for the dates in question by verifying:

(i) what the local weather conditions and sub-soil moisture levels were for the dates in question (also refer to subparagraph C(7) above), and

(ii) with agricultural experts in the area, who are knowledgeable of the IRR practice method and irrigation equipment used, what the expected results would be utilizing the IRR practice method and irrigation equipment under the particular conditions and soil types for the dates in question.

(3) When due to an unavoidable insured COL, insureds are unable to prepare the land for their established IRR method.

(a) In some areas, it is a normal and recognized practice to prepare furrows for irrigation after the crop is planted and established. In some instances severe, prolonged drought may not allow a crop to mature to a height sufficient enough to allow furrows to be made without severe damage or destruction of the crop trying to establish the furrows.

E. Properly Identifying Cause of Loss (continued)

Also, in some instances severe, prolonged drought may cause some soil types to collapse when trying to make the furrows. In either instance, without the furrows, IRR water cannot be properly distributed to all areas of the field, which may lead to loss of production. If it is determined that the severe drought was the sole reason for the furrows not being made, the resulting loss of production is covered. Confer with the local NRCS and other similar sources knowledgeable in furrow type irrigation operations to help make these determinations.

(b) Besides drought preventing establishment of furrows for furrow irrigation as stated above, there may be other unavoidable insured causes of loss that prevent the insured from preparing the land for his/her established irrigation practice.

(c) The COL code on the PW would be as stated in exhibit 3.

(d) Document in the Narrative on the PW or on a Special Report, at least the following:

(i) The insured's established IRR method;

(ii) The insured COL that prevented the insured from being able to prepare the land for the insured's established IRR method; and

(iii) Additional supporting documentation explaining why it has been determined that drought or another insured COL was the sole reason the land could not be prepared for the established IRR method.

302 Organic Certified & Organic Transitional Practices

A. Coverage and Documentation

(1) The insured must provide the AIP with copies of the records required in the GSH for OC and OT acreage. If the AIP has not obtained the records from the insured prior to loss adjustment, request these records from the insured. In addition, obtain any recent field inspection reports submitted by an inspector to the certifying agent. Verify pertinent information from these records to aid in the determination of:

(a) insurability, practice, if applicable,

(b) whether acreages reported agrees with the acreage shown on the certifier's records for certified acres and the organic plan or written documentation issued by a certifier if the insured has only transitional acreage; and

A. Coverage and Documentation (continued)

(c) whether the insured has been following good organic farming practices. Organic Inspection Reports from the certifying agency can be used as an aid to indicate areas of possible concern. However, because these organic field inspections completed by the certifying agency's inspector could have taken place far in advance of the time of the adjuster's inspection, this report alone cannot be used to indicate the insured did not follow GFPs for an organic practice. If the adjuster believes the noted area on the Organic Inspection Report is still of concern, follow the instructions in (6) below.

(2) Items to identify from the organic records are (but not limited to) the following:

(a) Exact field locations of certified organic, transitional, and buffer zone acreage,

(b) Exact field location of acreage not maintained under organic management (i.e., crops grown under conventional or sustainable farming practices),

(c) Rotation requirements, fertilization methods, insect, disease, and weed control methods, etc.

(3) There is no additional QA for OC or OT practices.

(4) When a COL is questionable for the organic farming practice, such as weed, disease, or insect control for organically grown production, verify the validity of the methods used by the insured with organic agricultural experts for the area. Request any applicable control records (e.g., receipts with names of inputs for disease or insect controls and dates applied and control measures for weeds and dates control measures were taken, etc.).

(5) Use separate line entries on the PW for certified organic, transitional acreage (buffer zone acreage planted to insured crop is included with the certified organic or transitional acreage of which it is a part), and acreage grown under conventional or sustainable farming practice when insured in the same unit.

(6) Adjuster must verify the farming practice. If the practice is misreported, the AIP will correct the error as per the following:

(a) If the acreage was reported as OC but there is no organic practice included in the AD for the crop and county (or a written agreement in effect insuring the type/practice), the acreage reported as OC is uninsurable. The AR must be revised to show this acreage as uninsurable acreage.

(b) If the acreage was reported with a conventional practice but the acreage is OC or OT, meets the organic requirements in the GSH, and the AD offers an OC or OT for the crop and county, then the AR must be revised to show the acreage insured under OC or OT practice.

A. Coverage and Documentation (continued)

(c) If acreage was reported as an OC or OT, but the acreage is not certified organic and there are organic practice(s) included in the AD, the AR must be revised to show the acreage insured under the conventional practice and uninsured causes may apply.

B. Uninsurable Causes of Loss

(1) Any loss due to failure to comply with the organic standards will be considered an uninsured COL.

(2) Contamination by application or drift of prohibited substances onto land on which crops are grown using organic farming practices will not be an insured peril on any certified organic, transitional of buffer zone acreage.

303-400 (Reserved)

PART 4 INSUREDS CONTRACT INFORMATION

401 Notification of Prevented Planting or Notice of Loss

In accordance with section 14 of the BP, it is the insured's responsibility (not the agent or AIP) to provide any PP or NOL for insurable acreage. The insured must provide the agent/AIP any notice of PP or NOL for insurable acreage within the prescribed time stated in the policy/endorsement/CP. The BP state that all notices required to be received by the AIP within 72 hours may be made by the insured by telephone or in person, but the insured must confirm the notice in writing within 15 days. A form or card meeting FCIC-form standards for the required information for a NOL (Refer to exhibit 11) may be used by the insured to file written notice to the AIP or, if applicable, to confirm the notice in writing within 15 days. When the agent/AIP receives the notice from the insured by phone, e-mail, fax, or postal service, and documents such notice on a phone log, PW, claims log, claim registry, automated notice system to open claims, etc., and identifies the required information for a NOL, the policy requirement for confirming the NOL in writing will be considered fulfilled.

AIP responsibilities include:

(1) Preparing and distributing the NOL to the appropriate parties. It is suggested that agents or representatives taking NOLs are provided with instructions to obtain information pertaining to companion contracts (insured's shareholder in the loss-affected unit has a MPCI policy); i.e., name of the shareholder's AIP; and in the absence of this or if it is not known whether the shareholder has a MPCI policy; the name, address, and telephone number of the shareholder.

(2) Reminding insureds of their responsibilities, including but not limited to (the following is not applicable to PP notices):

(a) continuing to care for the crop;

(b) leaving representative samples/strips as provided in the BP, CP, or Endorsement when NOL is given less than 15 days prior to or during harvest;

(c) keeping production separate for each unit and for each practice having separate APHs, etc.; and

(d) keeping production from 1st and 2nd crop acreage separate; e.g., 100 acres of soybeans is first crop acreage and 200 acres of soybeans is second crop acreage. The soybean production from the 200 acres of second crop acreage is required to be kept separate from the production from the 100 acres of soybeans that is first crop acreage.

(3) Assign notices of loss to adjusters as quickly as possible to ensure timely service to the insured.

(4) Ensure, if at all possible, companion contracts are adjusted at the same time, as follows:

(a) If the companion contract is serviced by the same AIP, the AIP will make arrangements to have both contracts adjusted by the same adjuster.

(b) If the companion contract involves a different AIP, the AIP will notify the other AIP, if known, immediately of the situation. It should be encouraged that adjusters from different AIPs adjust the claim together; however, if either AIP is unable to adjust the claim, the other AIP will make the loss inspection and provide the necessary documentation to the AIP unable to be present on the loss inspection. It is expected that the number of times this situation occurs will be minimal.

(c) When only one AIP completes a loss inspection, the other AIP will be provided legible copies of the appraisal worksheet (when applicable) and PWs. At their discretion, both AIPs may review the loss inspection at a later date for quality assurance purposes.

(d) In the event that a loss inspection is completed by one AIP and the other AIP disagrees with the original findings, representatives from both AIPs are to discuss and resolve any discrepancies. If the discrepancies cannot be resolved, each representative is to follow their respective AIP's instructions.

(e) If upon receipt of a companion contract, it is discovered that an inspection has already been made by the other AIP, the claim may be completed based on the other AIP's findings, provided the AIP agrees with the original findings of the other AIP. Refer to subparagraph 902C regarding production determination when crop shares are involved. If there is reason to disagree with the findings of the other AIP, follow the same procedure outlined in subparagraph 401(4)(d).

(f) When a loss inspection indicates the need for a GFP decision, AIPs will work together to document the production methods carried out by the insured, obtain verifiable receipts, conduct research on the production methods, and make a decision. If AIPs are unable to agree on a decision, refer the request for a determination to the RMA RO. Each AIP will notify its insured in writing of the GFP decision. The decision applies to all insured shareholders on the acreage. Refer to the GSH for additional information.

(5) Use the instructions for delayed notice inspections in paragraph 702 if the insured failed to provide notice within the time prescribed in the policy provisions.

(6) When the insured has less than one hundred percent (100%) share of a loss-affected unit and the PW does not indicate or the AIP has not provided the information indicating whether the shareholder has a MPCI policy, question the insured to determine whether the other person sharing in the unit also has a MPCI policy. Contact the AIP for further instructions if the other person sharing in the crop unit has a MPCI policy.

(7) Review all information from prior inspections for the crop(s) being inspected to determine if any information from these inspections (appraisal worksheets, maps, PW, Special Reports, etc.) is pertinent to the inspection being performed.

(8) For all claims involving accepted delayed notices, the adjuster will:

(a) Follow the loss adjustment procedures for conducting appraisals, acreage determinations, AR information verifications, uninsured causes, etc.

(b) Complete only PW entries for which a satisfactory determination can be made and will not sign the claim. Document all such instances as directed in subparagraph 702D.

402 Delayed Notice of Loss

A. Delayed Notice of Loss

(1) The specified time to submit a NOL:

(a) For a planted crop (for production losses and dollar losses under dollar plans of insurance) is within 72 hours of initial time of discovery of damage or loss of production but not later than 15 days after the EOIP, even if the crop has not been harvested (by unit, for each insured crop in a county).

(b) For crops which RP is elected, not later than 45 days after the latest date the harvest price is released for any crop in the unit when there is a revenue loss and there is no damage or loss of production.

(c) For PP notices, the notice must be filed within 72 hours:

(i) After the FPD if the insured does not intend to plant during the LPP, or if an LPP is not applicable; or

(ii) When the insured determines the crop cannot be planted within the applicable LPP.

(d) For perennial crops and other plans of insurance, the specified timeframe for filing notices may differ from the preceding information; refer to the specific policy provisions for these crops.

(2) The AIP may accept the insured's delayed NOL only if the NOL was provided within the timeframe stated in the policy provisions for submitting (signing) final claims (replant, PP, or indemnity) unless excepted as stated in (3) below.

Example: Acceptable delayed NOL for corn. The insured finished harvest of the loss unit on October 1. In accordance with the policy provisions, the insurance period ends upon harvest. The insured mailed the notice on October 30, and the AIP received it on November 3. In order to meet the policy requirements, the notice must be received by the AIP before October 16. The notice is delayed 18 days, but not later than 60 days after the EOIP as required by the BP to submit (sign) a claim and the AIP is able to satisfactorily make all loss determinations.

(3) The following are exceptions for when the AIP may accept the insured's delayed NOL:

(a) There is a companion policy that has a timely NOL or accepted delayed NOL for the same unit/crop, the information from the companion claim may be used to complete the insured's claim. Refer to item (4) for further information regarding the use of the companion contract information.

(b) The insured has other units of the same crop in the county having a timely NOL or an accepted delayed NOL that is not past the time specified for submitting claims.

Note: Accepting a delayed NOL does not constitute acceptance of the insured's claim. Acceptance of the insured's claim is still dependent upon whether all loss determinations are satisfactorily made.

(4) For delayed NOL when there is a finalized companion contract:

(a) Unless the adjuster disagrees with the findings, the adjuster will use the information from the completed companion contract to make his/her determinations. The information from a withdrawn companion contract claim may be used if all the determinations needed to complete a final claim have been made. The adjuster shall not make his/her determinations until the adjuster has reviewed the companion contract and all respective documentation. The adjuster will enter the date and code number on the PW but will not sign the claim.

(b) The adjuster will submit a Special Report with any information relevant to the case, including any findings they disagree with and why. The items in subparagraph 702D are not to be included, except as stated in (c) below.

(c) If the companion contract was a delayed notice, the adjuster will determine all items listed in subparagraph 702D were addressed in the report for the companion contract. The adjuster will document his/her findings on any pertinent items omitted. A copy of the report initially prepared for the finalized companion contract is to be included as part of the documentation.

(d) If a companion contract has not been finalized, the adjuster will follow the procedures pertaining to companion contracts found in the LASHs; and, if applicable, items in subparagraphs 402A-B and 702D. If the companion contract is with another AIP, the adjuster will follow the instructions relating to companion contracts provided in subparagraph 401(4).

(5) When the insured submits a delayed NOL, remind the insured of:

(a) The requirement for filing a timely NOL, by unit for each insured crop in a county; and

(b) The AIP's right to reject any claim when the insured's failure to give timely notice affects the AIP's ability to satisfactorily procure data needed to properly adjust the claim, including notice for which (3) applies.

(6) For an inspection involving a delayed NOL, the adjuster does not have the authority to bind the AIP to any particular course of action. If the inspection is not authorized under (5)(a) and (b) above, do not make statements to the insured which could be construed as admitting or denying liability. The adjuster will inform the insured of the following:

(a) The adjuster's responsibility is limited to establishing the facts and assisting in the preparation of the delayed NOL or for consideration by the AIP.

(b) The AIP will inform the insured in writing of the approval or rejection of the claim (refer to subparagraph 702C).

B. AIP Approval/Rejection of a Delayed Notice of Loss

Generally, the amount of loss cannot be accurately determined if the insured failed to give the AIP the opportunity to examine the UH crop potential or the harvested crop residue. Therefore, a claim will usually be rejected if the crop and crop residue have been removed from the fields prior to loss adjustment inspection. However, if such a claim is approved, it will require extensive documentation to support satisfactory determinations of planting practices, production, etc.

(1) The AIP's approving official will:

(a) Approve only claims for which the adjuster was able to satisfactorily procure data needed to properly adjust the claim; and

(b) Reject claims for which the adjuster was not able to satisfactorily procure data needed to properly adjust the claim.

(2) Provide written notification to the insured of approval or rejection of the claim.

403 Review of APH Database (Production and Yield Report)

An APH database with the current approved APH yield for the crop/practice/type must be in place in order to complete a claim. Unless Appendix IV of the SRA requires a mandatory APH field review, the AIP will verify the approved APH during the loss adjustment inspection, as follows:

(1) Review the actual yields certified by the insured for reasonableness.

(2) Perform a cursory review to determine if the APH yield was calculated accurately.

(3) Compare the approved APH yields to the AR. Verify that the correct APH yields have been entered on the AR (by unit, Practice/Type/Variety, map area, etc.).

(4) Conduct additional reviews and/or make corrections, as appropriate, if:

(a) A current approved APH yield is not on file;

(b) Yields certified do not appear to be reasonable; or

(c) The approved APH yield appears to have been calculated incorrectly. If a correct/current APH yield cannot be verified before an inspection must be made, and the insured has a *bona fide* contract and claim, the inspection may be made but the claim cannot be finalized (do not obtain the insured's signature).

404 Review of Options & Endorsements

(1) If a high-risk land exclusion option is in effect, verify that:

(a) None of the acreage designated as high risk is included with insured acreage on the AR. If such acreage is included as insured acreage on the AR, revise the AR to correctly reflect the insured and uninsured acreage. (It is possible that the insured may have this high-risk land insured under a separate CAT policy (refer to the CIH for more information), and

(b) Harvested production from the acreage designated as high risk has been kept separate. If it has not, refer to the commingled production procedure in paragraph 1233.

(2) Review any other option form or endorsement that pertains to the crop and crop year being inspected. Make any appropriate verification as it pertains to the provisions of the option or endorsement. If there is insured and uninsured acreage, verify that harvested production has been kept separate or is allowed to be separated by meeting the criteria in paragraph 1233.

If damage results from hail or fire and a hail and fire exclusion is in effect, the adjuster will make an appraisal for uninsured (excluded) causes of loss if the damage exceeds the deductible established in the policy. Use the following instructions for computing and entering the appraisal in the "Uninsured Cause" column.

(1) Original hail or fire liability has not been reduced.

(a) Make an entry in the "Uninsured Cause" column, as described below, only if all the following conditions have been met:

(i) Hail or fire damage has occurred on the unit;
(ii) Hail and fire exclusion is in effect; and
(iii) The original amount of hail or fire liability has not been reduced.

(b) Enter the appraisal determined as follows:

(i) Determine the weighted average (based upon gross acres) percent of hail or fire damage (from the hail or fire claim) for the unit.

Example: Suppose a unit of wheat (270 acres) is covered by a MPCI policy (65% coverage level) with hail/fire excluded. Hail damages the unit as follows (percent of damage as shown on the private hail/fire carrier's loss form):

80 acres @ 0%	80 acres	X	.00	=	0.0
55 acres @ 48%	55 acres	X	.48	=	26.4
75 acres @ 66%	75 acres	X	.66	=	49.5
60 acres @ 100%	60 acres	X	1.00	=	60.0
	270 acres				135.9

135.9 ÷ 270.0 = .503 = 50.3% weighted avg. damage percent for unit.

(ii) Determine the hail/fire exclusion appraisal factor either by:

(A) calculating as instructed in steps (C) and (D) below, or

(B) skip steps (C) and (D) and obtain the factor representing the insured's coverage level percent and weighted average percent of hail/fire damage from exhibit 4.

Example: Factor from exhibit 4 and based on example in (b)(i) above (65% coverage level).

50.0% hail/fire damage =	.2308
00.3% hail/fire damage =	.0046
50.3%	.2354

(C) Do not use this step if the hail/fire exclusion appraisal factor was obtained from exhibit 4; go to step in (E) below. For each coverage level, the "deductible" is 100% minus the coverage level percent (e.g., 100% - 65% = 35%). Subtract the percent "deductible" from the weighted average percent of hail or fire damage (e.g., 50.3% weighted avg. hail damage - 35% "deductible" = 15.3%).

(D) Do not use this step if the "hail/fire exclusion appraisal factor" was obtained from the Hail/fire Exclusion Appraisal Factor chart; go to step in (E) below. Multiply the result in step (C) times the applicable 2-decimal level factor to determine a 4-place factor (hail/fire exclusion appraisal factor). Determine the 2-place factor as follows: 100 divided by the coverage level percent in step (C) (e.g., 100 ÷ 65 = 1.54 for the 65% coverage level). Determine hail/fire exclusion appraisal factor as follows: .153 X 1.54 = .2356.

(E) Multiply the factor determined in step (D) above (or as derived from the Hail/fire Exclusion Appraisal Factor Chart," exhibit 4) times the per-acre guarantee for the acreage. (If the crop is a dollar plan crop, the per-acre guarantee will be the per-acre DO, unless the instructions on the PW for the uninsured cause column shows the entry in bu., lbs., etc.).

Enter the result in the "Uninsured Cause" column of the PW (e.g., .2356 X 4.6 bu. guarantee (rounded to the nearest tenth) will equal a 1.1 bu. appraisal). Make no entry for "0" appraisals.

(2) Original Hail or Fire Liability has been reduced.

Note: The Hail/Fire Exclusion Appraisal Factor Chart (exhibit 4) is not applicable for this calculation.

(a) Make an entry in the "Uninsured Cause" column, as described below, only if all of the following conditions have been met:

(i) Hail or fire damage has occurred,
(ii) A hail/fire exclusion is in effect, and
(iii) The original amount of hail and fire liability has been reduced.

(b) Enter the appraised amount of uninsured hail or fire damage per acre calculated as follows: Divide the hail or fire insurance indemnity per acre by the original hail and fire insurance liability per acre. Multiply the result by the GPA divided by the coverage level percentage, and this result will be the appraisal for uninsured causes.

Example: Assume insured has the following:

MPCI GPA	= 90.0 bu./acre
MPCI coverage level	= 75% or .75
MPCI liability	= $180/acre
Original private hail/fire liability	= $200/acre
Reduced private hail/fire liability (reduced due to an MPCI insured COL)	= $150/acre

Since the private hail/fire liability has been reduced below the MPCI liability ($150 an acre versus $180 an acre), the "EXCEPT THAT" clause in the Hail and Fire Exclusion provisions applies.

Private hail/fire indemnity = 30% loss X $150/acre = $45/acre indemnity

$45/acre private hail/fire indemnity ÷ $200/acre original private hail/fire liability = $\frac{.2250 \text{ X } 90.0 \text{ bu./acre MPCI guarantee}}{.75 \text{ coverage level}}$ = 27.0 bu./acre appraisal

406 Review of Assignment of Indemnity

(1) Record whether an Assignment of Indemnity is in effect by completing the appropriate entry block (line) on the PW, or in the absence of an entry block (line), record the information on an attachment or in the Narrative of the PW.

(2) If it is discovered during the loss inspection that there is a release that has not been submitted or processed, document this on a Special Report, and attach it and the release statement to the PW.

(3) Record whether a Transfer of Coverage and Right to an Indemnity is in effect by completing the appropriate entry block (line) on the PW; or in the absence of an entry block (line), by recording the information on an attachment or in the Narrative of the PW.

(4) Prepare only one PW for the loss on the unit. Account for all the acreage, production, and share. The transferor's name must appear on the PW as listed on the latest policy confirmation.

(5) For a partial transfer, the insured and transferee(s) must sign the claim (transferee should sign below the transferor's signature).

(6) For a complete transfer, the transferee must sign the claim.

407 Review of Signature Authority

The AIP will provide the adjuster with the name of the party who can act on behalf of the insured to submit and sign crop insurance documents and ensure that anyone other than the insured who has signed loss related forms or claims is authorized to do so. Refer to the GSH for Signature Authority procedures and refer to the policy change form in DSSH for Signature Authority statement.

If an individual other than the insured states they are acting in behalf of the insured, and the AIP has not provided information that this party has authority to act on behalf of the insured, do not allow signatures until it is verified with the AIP that an acceptable signature authorization is on file granting such authority to this individual.

408-500 (Reserved)

501 Liability Adjustment Factor

A. General Information

If the liability determined to have existed at loss adjustment time is higher (based on the liability determined from the information on the PW and APH record) than the liability reported (based on the information the insured initially reported on their AR and/or Production Report (APH Record), if applicable), the LAF must be applied to the replant payment, PP payment, or indemnity payment calculation to hold the liability to the liability initially reported. Refer to exhibit 14 for example of where the LAF is applied in the replanting payment, PP payment, or indemnity payment calculation.

If the AR must be revised to process the practice, type, or variety determined to exist due to a different APH yield for the actual practice, type, or variety determined to have existed, or the APH has to be revised to correct the approved APH yield due to the AIP determining that the information the insured reported on his/her Production Report is different than what actually exists, the LAF based on the liability from the initial AR (including the incorrect APH due to the insured's MI on the Production Report (APH records) must still be applied to the indemnity payment calculation even though the liabilities determined to actually exist would match after the APH records and AR records are revised. For the purpose of determining a LAF, share is excluded from liability.

B. Misreported Information

The insured must submit annually all required AR information for all insured crops on an annual AR(s) to the AIP. The insured is responsible for the accuracy of all information contained in the AR. The insured is responsible for verifying the information on all such reports prior to submitting them to the AIP. The following subparagraphs identify when the MI provisions in section 6(g)(2) of the BP apply and do not apply:

(1) MI provisions apply to the acreage information reported as insured acreage. However, the provisions do not apply to any acreage reported as insured acreage that is not insurable acreage in accordance with the policy provisions for insurable acreage, as outlined in the CIH.

(2) MI provisions apply to reported insurable PP acreage anytime the insured misreports any actual information (for example, when there are only 80 acres but the insured reported 100 acres). However, if any of the acreage reported as PP is not eligible for a PP payment, the MI provisions do not apply.

Example: When the insured reported PP on 500 actual acres, but due to eligibility requirements, 400 of the 500 acres were determined to be ineligible for PP coverage.

B. Misreported Information (continued)

(3) MI determinations are based on the information for the unit acres reported on the AR for each type of claim; i.e., only the information from the reported replanted acres are used for MI determinations for replant payment claims, only the information from the reported PP acres are used for PP payment claims, and only the information for the planted acres (including replanted acres) are used for claims for indemnities.

(4) The AIP may correct errors in reporting units while adjusting a loss in order to reduce the AIP's liability and to conform to applicable unit division guidelines.

(5) The AIP must determine whether there are errors on an insured's AR. If differences exist between the AIP determined information and what was reported, the AIP must apply procedures outlined in this subsection to reconcile any errors on a line-by-line basis.

(6) Misreporting is correctable via a revised AR. The revised AR must be processed prior to the claim. The acreage on the revised AR will be used as the reported acres. Errors that may be corrected via a revised AR include:

(a) inadvertent switching of acreage between lines. The AIP should follow guidance in the CIH to reconcile these errors.

(b) simultaneous over and under-reporting between lines. The AIP must determine that this was in error and not an attempt to under report liability for the purpose of reducing premium. Revision of simultaneous over and under-reporting of APH is not allowable or subject to the stipulations of this subsection.

(i) The AIP can only make revisions to the extent that those changes hold liability to that which was initially reported and thus cannot increase liability.

(ii) The AIP cannot shift over-reported acres from one line to multiple lines to correct multiple misreporting errors.

Example: The line for unit 0001 is over-reported and the lines for units 0002 and 0003 are under-reported. The AIP must determine which line 0001 is simultaneously misreported with. The AIP cannot shift acres to more than one line from 0001. The AIP must justify and document on a Special Report why the acres were shifted.

(iii) When correcting acres, the AIP cannot lower the acres of an over-reported line lower than those determined. After over-reported acres on a line have been corrected, they are eligible to be shifted to another line.

B. Misreported Information (continued)

(c) The AIP must correct over-reported lines. Shifting of any over-reported liability can only occur if consistent with (b) above.

(d) Misreporting of APH should be reconciled in accordance with paragraph 502, as applicable.

(7) The AIP must determine if misreporting has occurred on any line on the AR prior to processing a claim. An insured has not accurately reported their unit if any information contained on the AR for that unit is incorrect. The AIP will use the determined information to ensure both the AR and claim are accurate on a line-by-line basis. Refer to the CIH for information regarding correctable transposition AR errors.

(8) If the insured over-reports liability for the unit (reported information results in liability higher than the liability determined by the AIP to exist), the information contained in the AR will be revised to be consistent with the correct information. AIPs must correct over-reporting prior to processing the claim. The AIP must determine the source of misreporting on the AR and correct those errors based on the information determined by the AIP. Any overstated premium resulting from the over-reported liability will be reduced accordingly and refunded to the insured if already paid.

(9) If the insured under-reports liability for the unit (reported information results in liability lower than the liability determined by the AIP to exist), the loss liability for the unit will be held to the liability reported by reducing the production guarantee or amount of insurance on the unit by the LAF. In order to appropriately hold the liability of the unit to that which was reported, the AIP must identify the under-reported information on the AR and apply the procedures outlined in this subsection to reconcile those errors. Refer to the GSH for the definition of LAF. In the event the insurable acreage is under-reported for any unit and a claim for indemnity is submitted, all production or value to count from all of the insurable acreage (reported and not reported) will count against the guarantee.

(a) The AIP should determine if misreporting has occurred in accordance with subparagraph 501B(6) above.

(b) The AIP will then apply a LAF to each under-reported line on the unit. Each under-reported line will have a LAF calculated from the data on that line.

(c) The LAF is always less than 1.000000.

B. Misreported Information (continued)

Example 1: EU under-reported. The AIP will apply a LAF to under-reported lines.

Unit	Reported Acres	Reported Liability	Determined Acres	Determined Liability	LAF	Loss Guarantee
0001-0001	100	$500.00	100	$500.00		$500.00
0001-0001	45	$225.00	50	$250.00	0.900000	$225.00
0001-0001	50	$250.00	50	$250.00		$250.00
Total	**195**	**$975.00**	**200**	**$1,000.00**		**$975.00**
0001-0002	65	$325.00	100	$500.00	0.650000	$325.00
0001-0002	45	$225.00	50	$250.00	0.900000	$225.00
0001-0002	35	$175.00	50	$250.00	0.700000	$175.00
Total	**145**	**$725.00**	**200**	**$1,000.00**		**$725.00**
EU Total	**340**	**$1,700.00**	**400**	**$2,000.00**		**$1,700.00**

Example 2: EU under-reported. Lines 2 & 3 simultaneously over and under-reported. Lines 5 & 6 under-reported.

Unit	Reported Acres	Reported Liability	Determined Acres	Determined Liability
0001-0001	100	$500.00	100	$500.00
0001-0001	55	$275.00	50	$250.00
0001-0001	45	$225.00	50	$250.00
Total	**200**	**$1,000.00**	**200**	**$1,000.00**
0001-0002	100	$500.00	100	$500.00
0001-0002	45	$225.00	50	$250.00
0001-0002	35	$175.00	50	$250.00
Total	**180**	**$900.00**	**200**	**$1,000.00**
EU Total	**380**	**$1,900.00**	**400**	**$2,000.00**

Reconciled Misreporting: The AIP will shift the acreage in lines 2 & 3 and apply a LAF to under-reported lines 5 & 6.

Unit	Reported Acres	Reported Liability	Determined Acres	Determined Liability	LAF	Loss Guarantee
0001-0001	100	$500.00	100	$500.00		$500.00
0001-0001	50	$250.00	50	$250.00		$250.00
0001-0001	50	$250.00	50	$250.00		$250.00
Total	**200**	**$1,000.00**	**200**	**$1,000.00**		**$1,000.00**
0001-0002	100	$500.00	100	$500.00		$500.00
0001-0002	45	$225.00	50	$250.00	0.900000	$225.00
0001-0002	35	$175.00	50	$250.00	0.700000	$175.00
Total	**180**	**$900.00**	**200**	**$1,000.00**		**$900.00**
EU Total	**380**	**$1,900.00**	**400**	**$2,000.00**		**$1,900.00**

B. Misreported Information (continued)

Example 3: EU with multiple reported acreage and APH errors. Lines 2 & 4 have simultaneous under and over-reported acres. Line 2 has an under-reported APH. Line 3 is under-reported. Line 4 has over-reported APH. The entire unit is under-reported.

Unit	Reported APH Yield	Reported Acres	Reported Liability	Determined APH Yield	Determined Acres	Determined Liability
0001-0001	125	100	$100,000.00	125	100	$100,000.00
0001-0002	125	90	$90,000.00	156	100	$124,800.00
0001-0003	156	95	$118,560.00	156	100	$124,800.00
0001-0004	156	110	$137,280.00	125	100	$100,000.00
0001-0005	150	100	$120,000.00	150	100	$120,000.00
EU Total		**495**	**$565,840.00**		**500**	**$569,600.00**

Reconciled Misreporting: Shift simultaneous over and under-reported acres on lines 2 & 4. Revise over-reported APH on line 4. Apply LAF to all remaining under-reported lines.

Unit	Reported APH Yield	Reported Acres	Reported Liability	Determined APH Yield	Determined Acres	Determined Liability	LAF	Loss Guarantee
0001-0001	125	100	$100,000.00	125	100	$100,000.00		$100,000.00
0001-0002	125	100	$100,000.00	156	100	$124,800.00	0.801282	$100,000.00
0001-0003	156	95	$118,560.00	156	100	$125,000.00	0.948480	$118,560.00
0001-0004	125	100	$100,000.00	125	100	$100,000.00		$100,000.00
0001-0005	150	100	$120,000.00	150	100	$120,000.00		$120,000.00
EU Total		**495**	**$538,560.00**		**500**	**$569,800.00**		**$538,560.00**

(10) If the AIP discovers the insured has incorrectly reported any information on the AR for any crop year, the insured may be required to provide documentation in subsequent crop years substantiating his/her report of acreage for those crop years, including, but not limited to, an acreage measurement service at his/her own expense. If the correction of any misreported information would affect an indemnity, PP payment or replant payment that was paid in a prior crop year, such claim will be adjusted and the insured will be required to repay any overpaid amounts. If the AIP has evidence the insured intentionally misreported (misrepresentation) acreage information, the voidance provisions in section 27 of the BP apply. If the AIP does not have evidence that the acreage information was intentionally misreported (misrepresentation), the MI provisions apply.

502 Misreported APH or Practices/Types/Variety Within the Same Unit

The following applies only when the APH or P/T/variety within the same unit is not correctable as allowed in the CIH.

(1) If it is determined a practice/variety/type actually existed for a unit and was not reported on the AR for the unit (or it is determined that information reported by the insured to determine the insured's approved APH is incorrect) the approved APH yield for each practice, variety, or type is different (for example, a summer fallow practice is reported but a CC practice actually exists with each practice having a different APH yield); or based on what the AIP determines actually exists is different than the initial approved APH yield (based on the information the insured reported on his/her Production Records (APH records)); and a claim for replant payment, PP payment, or indemnity payment will be processed (unless (3) below applies). Prior to processing the claim, the following steps and sequence must be taken:

(a) An APH record for the correct practice/type/variety (or corrected APH record, if applicable) must first be processed through the PASS, and

(b) A revised AR to change the unreported practice/type/variety information along with the applicable APH yield, guarantee, determined to actually exist, unless (3) below applies.

(2) A LAF based on the initial AR liability must be applied to the replant payment, PP payment, or indemnity calculation, if applicable. For the purpose of determining a LAF, share is excluded from liability.

(3) If the AIP has supporting evidence of the insured misrepresenting the P/T for the purpose of obtaining lower premium or a higher guarantee, the policy should be voided in accordance with the policy provisions. Refer to Appendix IV of the SRA.

503 Different Production Method Carried Out That Results In Lower Yield

If it is discovered that a different production method has been carried out than what was reported on the AR, and will likely result in a lower actual yield than was established for the production method reported:

(1) The approved yield will be reduced to an amount consistent with the production methods actually carried out for the crop year. The yield will be adjusted based on the insured's other units where such production methods were carried out or to the applicable county transitional yield for the production methods if other such units do not exist.

(2) The AR will be revised with the revised APH yield that matches the practice determined to actually exist;

(3) If applicable, a LAF will be applied to the replant payment, PP payment, or indemnity payment calculation. Refer to paragraph 501 for more information about the LAF;

(4) If the AIP discovers during loss adjustment that part of the perennial crop acreage reported for the crop year had been reduced due to disease, a natural occurring weather-related event, or a man-made event that occurred prior to insurance attaching, the AR may have to be revised. Refer to subparagraph 821G(8)(b) for further instructions; and

(5) For perennial crops, if the AIP discovers during loss adjustment that a different production method was carried out in the prior year and this may result in a lower actual yield; an amount equal to the reduction in the yield will be added to the PTC due to uninsured causes. Refer to paragraph 1221 for further instructions.

504 Revision to Correct Uninsurable Acreage As Insured Acres

When it is determined that uninsurable acreage has been incorrectly reported as insured acres, the AIP must revise and process the revised AR to delete such acreage from the insured acres (Insured Acres block area of the AR form) and add the uninsurable acreage to the uninsured acres (Uninsured Acres block area of the AR form). No premium is due for the uninsurable acreage. However, if both insurable insured acreage and uninsurable acreage are in the same unit, and the production from the insured and uninsurable acreage has not been kept separate, it will all be counted as PTC against the unit guarantee.

505 Unreported Acreage Which May Be Late Planted

Acreage which the insured did not report or designate (even as uninsured acreage), and which the insured asserts was planted after the FPD (or LPD, if applicable) will be handled as follows:

(1) Acreage will be considered insurable (but not insured) if the:

(a) acreage is insurable under the AD or by WA; i.e., rates and coverage are available for the acreage itself, or crop type, class, variety, or practice carried out; and

(b) adjuster cannot verify to his/her satisfaction that such acreage was planted after the:

(i) FPD for the crop shown on the SP for the applicable county, or
(ii) latest allowable date under the LP provisions found in the applicable CP, if applicable to the crop, and the acreage was not prevented from planting.

(2) When it is determined that there is unreported insurable acreage as part of a reported unit structure (i.e., under-reported acreage for a unit):

(a) All production from the unreported insurable acreage will be counted against the production guarantee for that reported unit; or

(b) If the production is commingled with another unit, the procedures for commingled production must be applied; refer to paragraph 1233.

(3) When it is determined that the entire unreported insurable acreage could qualify as a separate unit in the same county:

(a) The production from the unreported unit acreage will be prorated to all other reported units as outlined in the procedure for unreported units (paragraph 1233); or

(b) If the production from an unreported unit in one county is commingled with the production from a reported unit in another county, follow the procedures in paragraph 1233. Because this involves two different counties, paragraph 1234 does not apply.

(4) Acreage is not insurable under the CP, SP, AD, or by WA if:

(a) the acreage was initially planted after the LPP (FPD if LPP is not applicable), unless LP coverage is allowed by the policy; or

(b) rates and coverage are not available for the acreage itself or the crop practice, type, class, or variety or practice carried out.

(c) the adjuster can verify to his/her satisfaction that the unreported acreage has been planted after the:

(i) FPD for the crop shown on the SP for the applicable county, or
(ii) Latest allowable date under the LP Provisions found in the applicable CP and the acreage was not prevented from planting by an insurable COL within the insurance period for PP.

(5) When it is determined there is unreported uninsurable acreage:

(a) The production from the unreported uninsurable acreage will not be counted against the production guarantee for the unit or any other unit if the production is kept separate from the insurable acreage production; or

(b) If the production from the uninsurable acreage is commingled with production from insurable acreage, the procedures for commingled production in paragraph 1233 must be applied.

506-520 (Reserved)

Section 2 Late Planting Coverage

521 General Information

These provisions provide automatic LPP coverage, unless the specific CP or SP specifies otherwise.

(1) For applicable crops planted during the LPP (regardless of the reason for the delayed planting), the per-acre production guarantee for those acres will be reduced as stated in paragraph 523 below, unless otherwise specified in the CP. The LPP, as specified in the BP, is 1-25 days after the FPD unless specified otherwise in the CP or SP. (CP for millet and tobacco specify less than 25 days).

(2) If the insured crop was prevented from being planted, due to an insurable cause, by the FPD or during the LPP by an insurable cause occurring within the insurance period for PP coverage and PP provisions are applicable to the insured crop (not applicable to tobacco), coverage may be provided for acreage planted to the insured crop after the LPP (or after the FPD for crops that do not have an LPP). Refer to subparagraph 523(2) for more information.

522 Crops Having Late Planting Period Coverage

(1) The following crops qualify for LPP coverage: buckwheat, canola/rapeseed, corn, cotton, ELS cotton, dry beans, dry peas, flax, grain sorghum, hybrid seed corn, hybrid sorghum seed, millet, oats, onions, peanuts, mustard, central and southern potatoes, northern potatoes, rice, silage sorghum, safflowers, soybeans, sunflower seed, and tobacco.

(2) For Green Peas, Popcorn, Processing Sweet Corn, Processing Beans, and Rye, LPP is allowed only if provided in the SP and the insured provides written approval from the processor by the ARD that it will accept the production from the late planted acres when it is expected to be ready for harvest.

(3) For Sugar Beets, LPP is not available in California counties with an April 30 CCD and a July 15 cancellation date.

(4) For Barley and Wheat, LPP is applicable to small grains, except to any barley or wheat acreage covered under the terms of the Wheat or Barley Winter Coverage Endorsement.

(5) Barley or wheat covered under the terms of the Winter Coverage Endorsement must be planted on or prior to the applicable FPD specified in the SP. In counties having one fall FPD for acreage covered under the Wheat or Barley Winter Coverage Endorsement and another fall FPD for acreage not covered under the endorsement, the fall LPP will begin after the FPD for acreage not covered under the endorsement.

(1) For all the crops listed in paragraph 522 that are planted within the LPP, the per-acre production guarantee or per-acre amount of insurance will be reduced by one percent (1%) per day for each day planted after the FPD, unless otherwise specified in the CP or SP. The per-acre production guarantee is reduced a maximum of twenty-five percent (25%) for planting 25 days after the FPD, unless otherwise specified in the CP or SP.

(2) For all crops planted to the insured crop after the LPP (after the FPD for crops not having an LPP). Provided the crop was prevented from being planted due to an insurable cause as stated in subparagraph 521(2) above and PP coverage is available for the crop (this is not allowed for tobacco even though PP coverage is available for tobacco), the insured may choose to insure such acreage. Insureds must report the date acreage is late planted if they decide to report it as insured acreage. The per-acre production guarantee or per-acre amount of insurance for such acreage will be the same as for the insured's PP guarantee for the insured crop.

Example: The insured has sixty percent (60%) PP coverage level with a 100 bu. per-acre guarantee for timely planted acres. The guarantee for the LP acres will be 60 bu. (.60 X 100.0).

(3) For acreage on which an insurable COL prevents completion of planting as specified in the policy definition of "planted acreage" (e.g., seed is broadcast on the soil surface but cannot be incorporated and it would have been insurable had the seed been incorporated), is covered at a reduced guarantee provided that PP coverage is available for the crop. Such acreage will be considered as acreage planted after the FPD (or after the LPP, if one applies), and the per-acre production guarantee will be the same as the PP guarantee for the crop.

Example: The insured has sixty percent (60%) PP coverage level with a 100 bu. per-acre guarantee for timely planted acres. The guarantee for these acres will be 60 bu. (.60 X 100.0).

(4) If the insured crop is replanted during the LPP due to the crop being destroyed by an uninsured cause (e.g., chemical damage), no reduction in the guarantee will apply. However, refer to subparagraph 721F for additional details.

524-600 (Reserved)

PART 6 FIRST, SECOND, & SUBSEQUENT CROPS PLANTED ON SAME ACREAGE IN SAME CROP YEAR

601 First (1st) Insured Crop Planted & Second (2nd) Crop

If there is an insurable loss on the 1st insured crop acreage in the unit and an indemnity is due on the 1st crop unit, except in the case of double-cropping as stated in paragraph 603, the following applies:

A. General Information

(1) A 2nd crop does not include replanting of 1st crop acreage to the same 1st crop, except as stated in subparagraphs 721A or B.

(2) Forage production and other insured perennial crops are considered a 1st insured crop. Although forage and other perennial crops may not be planted each year, they are the 1st insured crop.

(3) If an insured plants and insures skip-row cotton, it fails, and grain sorghum is planted in the rows that were not planted to cotton, the grain sorghum is still considered the 2nd crop for this acreage.

(4) The 1st insured/2nd crop rules apply to certified seed potatoes and malting barley the same as they do to other crops such as regular potatoes and feed barley.

(5) AIPs should make insureds aware that an insured's election not to insure acreage of a second crop may affect any linkage requirement for FSA program participation. Payments administered by FSA will determine the impact of not insuring a second crop. ARPI and WFRP are acceptable for meeting any linkage requirements.

(6) When a policyholder elects to not insure second crop acreage, the acreage and production from such acreage is not included for APH purposes for subsequent years except when it is commingled with production from insured acreage. Refer to the CIH for procedures regarding commingled production for APH purposes.

(7) AIPs do not have the option of denying the additional first insured crop indemnity when no indemnity is paid for second crop acreage if all policy provisions are met. AIPs should handle late notices of loss in accordance with current policy and procedures.

(8) Refer to the PPSH for additional 1st insured/2nd crop information relating specifically to PP claims.

(9) Some AIPs have developed forms that allow the insured to:

(a) elect to not plant an insured 2nd crop;
(b) plant an insured 2nd crop but not insure 2nd crop acreage, or

A. General Information (continued)

(c) plant an insured 2nd crop and waive the indemnity on the 2nd crop if the 1st crop indemnity is greater than the 2nd crop indemnity. If the 1st crop indemnity is not greater than the 2nd crop indemnity then the indemnity for the 2nd crop will not be waived.

B. Insured's Options

(1) Not plant a 2nd crop on the same acreage for harvest in the same crop year and receive one hundred percent (100%) of indemnity due for the 1st insured crop acreage.

(2) Plant but not insure a 2nd crop planted on the same acreage as the 1st insured crop was planted for harvest in the same crop year**.** For this situation, the following applies:

(a) This decision is on a 1st insured crop unit basis. If the insured has multiple units of the 1st insured crop, the election to insure 2nd crop acreage is made separately for each of the 1st insured crop units and applies to all 2nd crop acreage in the unit, unless double-cropping provisions apply in which case, the 2nd crop acreage meeting the double-cropping-history requirements must be insured.

Example: Insured's Unit 0001-0201OU corn = 150 acres of 1st insured crop corn, 50 of which suffers an early loss and is released. Insured plans to plant 2nd crop on acreage. Unit 0001-0301OU soybeans = 250 acres of planted soybeans consisting of 200 1st insured crop acres and 50 2nd crop acres (same 50 acres that corn was planted in corn unit 0001-0201OU). The insured timely elects to not insure the 50 acres of 2nd crop acreage in unit 0001-0301OU soybeans. Insured's Corn Unit 0001-0202OU = 175 acres of 1st-insured crop corn, 20 of which suffers an early loss. Unit 0001-0302OU soybeans = 250 acres of planted soybeans consisting of 230 1st crop acres and 20 of 2nd crop acres (same 20 acres that corn was planted on in corn unit 0001-0202OU). However, the insured timely elects to insure the 20 acres of 2nd crop acreage in unit 0001-0302OU soybeans.

(b) Insured's must make their election to not insure 2nd crop acreage by the following deadline if:

(i) the 1st insured crop is insured under the BP, at the time the 1st insured crop acreage is released (if no acreage is released, on the earlier of the ARD for the 2nd crop or when claim is signed for the 1st insured crop);

(ii) the 1st insured crop and the 2nd crop are both insured under the ARPI BP, by the ARD for the 2nd crop; or

(iii) If the 1st insured crop is insured under the ARPI BP and the 2nd crop is insured under the BP, before the 2nd crop is planted.

B. Insured's Options (continued)

(c) The insured will collect one hundred percent (100%) of indemnity due for the 1st insured crop acreage, if:

(i) written notice is provided, signed, and dated by the insured to the AIP stating that the insured elects not to insure acreage of a 2nd crop by the deadline for the specific situation stated in item (b) above; or

Important: In the event a 2nd crop is planted and insured with a different AIP, or planted and insured by a different person, the first insured must provide written notice to each AIP that a 2nd crop was planted on acreage on which they had a 1st insured crop.

(ii) written notice is provided as described in (i) above; however, the insured subsequently plants and reports 2nd crop acreage as insured crop acreage. In this situation the AR must be revised to designate the 2nd crop as uninsured acreage.

A written notice can be considered a statement on: (1) the PW, (2) an attachment to the PW (e.g., Special Report), or (3) a form developed by the AIP for this purpose that states the insured elects to not insure the 2nd crop.

(d) The indemnity for a 1st insured crop with an insurable loss will be limited to thirty-five percent (35%) if:

(i) the 1st insured provides written notice that a 2nd crop will not be insured on the same acreage as the 1st insured crop, but does not own or have control of the land;

(ii) a 2nd insured plants and insures a 2nd crop on that same acreage;

(iii) there is an insurable loss to the 2nd crop; and

(iv) the 2nd insured receives an indemnity on the unit in which the 1st insured-crop acreage was planted.

(e) If the insured fails to provide written notice of his/her election to not insure 2nd crop acreage by the deadline for the specific situation stated in item (b) above, the 2nd crop acreage will be insured in accordance with policy provisions (the same as (3) below), and the insured must repay any overpaid indemnity for the 1st insured crop.

Important: If the AIP has evidence the insured intentionally insures the 2nd crop with a different AIP after providing a written notice to the AIP of the 1st insured crop stating that they elected not to insure acreage of a 2nd crop, the voidance provisions in the BP apply.

B. Insured's Options (continued)

(f) The insured must designate on the AR the 2nd crop acreage planted on 1st insured crop acreage (within the same crop year) that will not be insured. Explain in the designated area on the AR why the acreage is uninsured.

(3) Plant and insure the 2nd crop on the same acreage (as the 1st insured crop was planted) for harvest in the same crop year. For this situation, the following applies:

(a) If the 2nd crop acreage is planted and insured with a different AIP, the insured must provide written notice to each AIP that a 2nd crop was planted on acreage on which the insured had a 1st insured crop.

(b) If there is an insurable loss on the 2nd crop acreage and the insured has not waived the indemnity for the 2nd crop acreage, the insured will:

(i) Receive one hundred percent (100%) of the indemnity due for the 2nd crop acreage. The insured will pay the full premium (producer-paid premium) for the 2nd crop acreage. Subsequent crops planted on the same acreage within the same crop year will not affect the indemnity of the 2nd crop acreage;

(ii) Collect an indemnity payment that is 35 percent of the insurable loss for the 1st insured-crop acreage;

(iii) Owe 35 percent of the premium (producer-paid premium) for the 1st insured-crop acreage having a 2nd crop planted on it.

(c) If the insured's option was to plant 2nd insured crop acreage but no crop is planted, the acreage is planted to a crop not insured, or the insured 2nd crop acreage does not suffer an insurable loss, then the following applies:

(i) The insured should request to receive the remainder (65 percent) of the 1st insured-crop indemnity that was not previously paid. However, if the insured does not request such payment, the AIP should contact the insured for follow-up to determine the status of any 2nd crop. For most situations, this should be done on or before the billing date for the 1st insured crop.

(ii) If the insured certifies there is no 2nd crop loss on the same acreage on the 1st insured-crop unit, or the AIP otherwise verifies there is no 2nd crop loss, then:

(A) the remainder (65 percent) of the 1st insured-crop indemnity must be paid to the insured, and

(B) if the entire premium is not offset by the indemnity, a bill for the remaining premium is sent.

B. Insured's Options (continued)

(iii) The insured does not have the option to avoid payment of the additional premium for the 1st insured crop by refusing the remaining 65 percent of the indemnity owed for the 1st insured crop.

(iv) AIPs may make payment of the additional indemnity for the 1st insured crop before announcement of the harvest price for revenue plans of insurance, or they may choose to wait until after the announcement to avoid making two additional payments.

(d) If the 2nd crop acreage planted is insured and has an insurable loss:

(i) The AIP must perform loss adjustment on the 2nd crop (after receiving notice) unit, and give the insured the option to accept or reject the 2nd crop indemnity. It is possible for the insured to decline any 2nd crop loss indemnity without the AIP conducting loss adjustment. If the 2nd crop is insured with a different AIP, the AIP for the 1st insured crop may use claim documents from the other AIP to show there was a loss for the 2nd crop acreage. It is the insured's responsibility to obtain copies of such documentation and provide it to the AIP for the 1st insured crop.

(ii) The insured may elect not to accept the 2nd crop indemnity payment up until the time they would cash the 2nd crop indemnity payment check, if one was issued.

(iii) AIPs may elect whether or not the adjuster will calculate indemnity payments for policyholders to assist them in determining whether to accept the additional sixty-five percent (65%) first crop indemnity (less sixty-five percent (65%) premium), or accept the 2nd crop indemnity.

(iv) And the insured waives the indemnity or does not cash the indemnity check for the 2nd crop acreage, the insured will:

(A) Collect an indemnity payment for the other sixty-five percent (65%) of insurable loss that was not previously paid for the 1st insured crop; and

(B) Be responsible for paying the remainder of the premium for the first insured crop.

B. Insured's Options (continued)

(v) If an insured waives the 2nd crop indemnity, AIPs shall use normal procedures to show claim closure with an indemnity due but waived by the insured. The indemnity waiver is based on the unit structure for each individual 1st crop unit. 2nd crop indemnities must be waived on a first insured crop unit basis (for all 2nd crop acreage on the same acreage where the 1st insured crop unit was located) except where double-cropping history is applicable to a portion of the acreage in the unit, in which case the insured can accept the loss payment for acreage eligible for the double-cropping exemption and reject the loss on acreage not eligible for the exemption.

Example 1: If there is one second crop unit located where there was one first insured crop unit:

Unit 0001-0001BU Corn	1st ins. crop acreage – 250.0 acres
Unit 0001-0003BU Soybeans	2nd ins. crop acreage – 250.0 acres

In this case the insured waives the indemnity for the 2nd crop acreage (unit 0001-0003BU soybeans). Because the 2nd crop acreage (unit 0001-0003BU soybeans) is located where the 1st insured crop acreage was planted, the insured is preserving all of the 1st insured crop acreage indemnity for unit 0001-0001BU.

Example 2: If there are two second crop units located where there was one first insured crop unit:

Unit 0001-0001OU Corn	1st ins. crop acreage – 250.0 acres
Unit 0001-0003OU Soybeans	2nd ins. crop acreage – 100.0 acres
Unit 0001-0002OU Soybeans	2nd ins. crop acreage – 150.0 acres

In this case, if the insured wants to waive insurance on the 2nd crop acreage, the insured must waive the indemnity for both units (0001-0003OU soybeans and 0001-0002OU soybeans) in order to preserve the indemnity for the 1st insured crop acreage. This is because there are two units (0001-0003OU and 0001-0002OU) of the 2nd crop located where there was one first insured crop unit.

Example 3: If there is one second crop unit located where there are two first insured crop units.

Unit 0001-0001OU Corn	1st ins. crop acreage 100.0 acres
Unit 0001-0002OU Corn	1st ins. crop acreage 100.0 acres
Unit 0001-0002OU Soybeans	2nd ins. crop acreage 200.0 acres

B. Insured's Options (continued)

In this case, the insured may waive indemnity on the 100.0 acres of the 2nd insured crop acreage where unit 0001-0001OU 1st insured crop acreage was located to preserve the 1st insured crop indemnity on unit 0001-0001OU corn, but not waive the 100.0 acres of the second crop acreage located where the 1st insured crop unit 0001-0002OU corn was located or vice versa rather than waiving all of the 2nd crop acreage where the first insured crop acreage for corn units 0001-0001OU and unit 0001-0002OU were located. This is because the insured is electing to waive the 2nd crop acreage indemnity based on the individual 1st insured crop unit.

(e) If the 1st insured crop suffers a loss, the insured must provide separate records of production for all insured crops planted on the same acreage as the 1st insured crop. Those records acceptable for loss adjustment purposes are acceptable as documentation for separate production from acreage that is and is not planted to a 2nd crop. If the insured fails to provide separate records, the production of each crop will be allocated to the acreage in proportion to the liability of the acreage.

Example: The insured has an insurable loss on 100 acres of wheat and subsequently plants cotton on 10 acres of that wheat acreage. The insured must provide records of the wheat and cotton production on those 10 acres separate from any other wheat and cotton production that may be planted in the same unit.

C. Possible Impacts on Companion Contracts

It is possible when different policyholders share an insurable interest on the same acreage that one policyholder might have a greater loss amount on the 1st insured-crop acreage, while the other policyholder has a greater loss amount on the 2nd-insured crop acreage. Different levels of coverage, different APHs, or different insurance plans, etc., between landlords, tenants or other sharing parties may cause this situation to occur. The following scenarios illustrate this:

Scenario 1: Both the landlord and the tenant have insurance policies in effect for both the 1st and 2nd insured crops and neither qualify for double-crop exemption. One insured has CAT level of coverage, while the other has additional coverage.

Landlord 1st Insured Crop		**Tenant 1st Insured Crop**		
CAT Policy	No Loss	Buy-up Policy	$10,000 Loss	35% = $3,500
Landlord 2nd Insured Crop		**Tenant 2nd Insured Crop**		
Buy-up Policy	$10,000 Loss	CAT Policy	No Loss	

C. Possible Impacts on Companion Contracts (continued)

The landlord did not have a 1st insured crop loss. Therefore, the landlord would not have the option to decline insurance on the 2nd crop. Even though the tenant did not have an insured 2nd crop loss, the landlord did. The tenant would be restricted to $3,500 (thirty-five percent (35%) of the 1st insured crop loss) if the landlord accepted the $10,000 2nd crop indemnity.

Scenario 2:

Landlord 1st Insured Crop			**Tenant 1st Insured Crop**		
CAT Policy	$500 Loss	35% = $175	Buy-up Policy	$10,000 Loss	35% = $3,500
Landlord 2nd Insured Crop			**Tenant 2nd Insured Crop**		
Buy-up Policy	$10,000 Loss		CAT Policy	$500 Loss	

The landlord and tenant will each receive at least thirty-five percent (35%) of their insured share of any 1st insured crop loss. Each would have the option to waive insurance on the 2nd crop acreage.

Prior to knowing the outcome of the 2nd crop, each may have been given the opportunity to request the AIP to calculate and then pay the greatest possible indemnity for both crops as allowed by the policy provisions (refer to subparagraph A(9) above). In certain situations, this may mean waiving a 2nd crop indemnity in order to be eligible for the remaining sixty-five percent (65%) 1st insured crop indemnity.

However, once any entity is indemnified for an insured 2nd crop loss on the same acreage, all entities with an insurable interest in the1st insured crop will be limited to thirty-five percent (35%) of their insured share of any payable loss. Precedence is based on whether any insured accepts a 2nd crop indemnity. If the landlord is indemnified ($10,000) for their 2nd crop loss, the greatest possible indemnity allowed by the policy provisions for the tenant from both crops would be $4,000 ($3,500 which is thirty-five percent (35%) of their insured share of the 1st insured crop loss plus $500 from the 2nd crop).

Thirty-five percent (35%) of any 1st insured crop indemnity plus any insured 2nd crop indemnity is the greatest possible indemnity outcome allowed by the policy provisions for all insured entities sharing in the 1st insured crop if any entity accepts an indemnity on the 2nd crop acreage.

602 Reduction of Payments & Premium due to 2nd Crop

Except in the case of double-cropping as described in paragraph 603, the following applies:

(1) Even if another person plants a 2nd crop on acreage where the 1st insured crop was planted and suffered a loss and the 2nd crop is insured and suffers an insurable loss, the indemnity payment for the 1st insured crop acreage will be thirty-five percent (35%) of the indemnity due for the 1st insured crop acreage.

Example: Insured AA plants corn and receives an indemnity. Insured AA then cash rents this acreage to Insured ZZ who plants insured soybeans on this same acreage. Insured AA must notify his/her AIP and must notify Insured ZZ's AIP that a 2nd crop was planted on acreage on which he/she (Insured AA) had a 1st insured crop.

(2) If the 1st insured crop is planted, is shared with another person or other people, and the crop suffers a loss, each of the shareholders can decide whether they want to insure a 2nd crop that is planted on the same acreage independently of each other. However, if the 2nd crop suffers a loss and the person or any one of the people who chose to insure the 2nd crop accepts their indemnity check, the 1st insured crop indemnity will be limited to thirty-five percent (35%) for all shareholders.

(3) If the 1st insured crop acreage was planted acreage and the 2nd crop acreage does not suffer a loss or is not insured, one hundred percent (100%) of indemnity of the 1st insured crop acreage will be applicable.

(4) Cash rent, as used below means cash renting for agricultural use (growing a crop, haying, grazing, etc.) This does not apply when the acreage is cash rented for a non-agricultural use; e.g., hunting.

(a) The crop that is planted by the person cash renting the acreage is considered the 2nd crop for both the person having the 1st insured crop, and is also considered the 2nd crop for the person that cash rented the acreage and planted a crop on this acreage.

(b) Another person planting the 2nd crop cannot choose not to insure the acreage if the 2nd crop is an insurable crop and that person has an active policy for this crop in the county. This is because only the insured that had the 1st crop indemnity may elect to not insure any 2nd crop acreage to preserve one hundred percent (100%) of his/her 1st crop indemnity.

603 Indemnity Payment as it Relates to Double-Cropping History

A. Double Cropping Criteria for Planted Acreage

If all of the following conditions are met, the insured qualifies for double-cropping history (Refer to the PPSH for criteria regarding double-cropping and PP):

(1) It is a practice generally recognized by agricultural experts or the organic agricultural experts in the area to plant the second crop for harvest following harvest of the 1st insured crop;

(2) Additional coverage insurance offered under the authority of the ACT is available in the county for two or more crops that are double-cropped;

A. Double Cropping Criteria for Planted Acreage (continued)

Note: Available means that a FCI program is offered for the insured crop in the county by either having: (1) AD on file for the crop in the county (crop not required to be insured), or (2) if no AD are on file for the crop in the county, the crop is insured via a WA.

(a) The insured is not required to have additional coverage to qualify for double-cropping.

(b) The two crops claimed as qualifying double-cropped acreage for the current crop year, must both be "insurable" in the current crop year in order to qualify as double-cropped acreage (i.e., insurance offered under the authorization of the ACT is available in the county for both crops.);

Example: Wheat planted for harvest as grain would have insurance available under the ACT, but wheat planted for haying purposes would not. For the purpose of determining double-crop history, both crops do not have to have been insurable or insured in prior years; e.g., for the current crop year, the 1st insured crop is wheat, and the 2nd crop is soybeans. Prior year records show wheat is followed by carrots in at least two of the last four crop years. If soybeans are planted following 1st insured wheat acres, the wheat qualifies for double-cropping (entitled to one hundred percent (100%) indemnity payment) due to the fact that there was double-cropping history for carrots, which is not a crop for which insurance is available.

(3) The insured provides records as stated below:

(a) His/her own records acceptable to the AIP of acreage and production that show the insured has double-cropped acreage in at least two of the last four crop years in which the 1st insured crop was planted in the county for which the claim is being made, or

(i) If the 1st insured crop is the subsequent crop planted on the same acreage in the same crop year as the uninsured crop, the double crop records are based on the subsequent crop (1st insured crop). Refer to examples in subparagraph D below.

(ii) Refer to subparagraph C below for what constitutes acceptable records and the examples in subparagraph D below regarding the insured's own records of double-cropping. When the double-cropping history requirements have been based on the insured's own records, the double-cropping exemption may be used anywhere in the county.

A. Double Cropping Criteria for Planted Acreage (continued)

(iii) If the insured acquired additional acreage for the current crop year and if the total cropland acres are greater than the previous year's total cropland acres, the insured may apply the percentage of the acres previously double-cropped to the total cropland acres the insured is farming in the current crop year, using the following calculation:

(A) Determine the number of acres of the first insured crop that were double cropped in each of the years for which records are provided;

(B) Divide each result of (A) by the number of acres of the first insured crop that were planted in each respective year, rounded to tenths;

(C) Add the results of (B) and divide by the number of years the first insured crop was double cropped, rounded to tenths; and

(D) Multiply the result of (C) by the number of insured acres of the first insured crop.

Example: An insured has 400 acres in the farming operation, acquired an additional 100 acres for the 2017 CY and all 500 acres are planted to a 1st insured crop. The insured provides records showing:

Step A:			Step B:	
Year	Wheat Acres (1st crop)	FAC Soybean Acres (2nd crop)	2nd crop acres/ 1st crop acres	% DC
2009	300.0	100.0	100/300	33.3%
2011	200.0	150.0	150/200	75.0%
2013	175.0	175.0	175/175	100.0%
2016	400.0	200.0	200/400	50.0%

Step C: (33.3 + 75.0 + 100.0 + 50.0)/4 = 64.6%

Step D: (400 + 100) x .646 = 323.0 acres eligible for DC.

(b) Someone else's records acceptable to the AIP of acreage and production that show the exact same acreage in the county on which the claim is being made for the 1st insured crop was actually double-cropped in at least two of the last four crop years in which the 1st insured crop was grown by someone else, and the insured has acquired this exact same acreage.

(i) If the 1st insured crop is the subsequent crop planted on the same acreage in the same crop year as the uninsured crop, the double crop records are based on the subsequent crop (1st insured crop). Refer to examples in subparagraph D below.

A. Double Cropping Criteria for Planted Acreage (continued)

(ii) Refer to subparagraph C below for what constitutes acceptable records and refer to example 4 in subparagraph D below for an example of using someone else's double-cropping records. When the double-cropping history requirements have been met based on someone else's records, the double-cropping exemption may only be used for the exact same acreage for which the double-cropping records were provided.

(4) The amount of acreage the insured is double-cropping in the current crop year does not exceed the number of acres for which the insured provides records, as required in subparagraph A(3) above.

B. Receiving a Full Indemnity Payment on Planted 1st Insured Crop Acreage

The insured may receive a full indemnity payment on the 1st insured crop in the following scenarios if all the double-cropping qualifications stated in subparagraph A above are met:

(1) The 1st insured crop is planted, suffers a loss, and an indemnity is due. Then in the same crop year, a 2nd insured crop is planted (on the same acreage as the 1st insured crop) suffers a loss, and an indemnity is paid to the insured;

(2) The 1st insured crop is planted and the subsequent insured crop is PP on the same acreage in the same crop year (the subsequent PP crop is not considered a 2nd crop since it is not a planted crop; refer to definition of "Second Crop"); or

(3) The 1st planted crop for the crop year is uninsured but insurance is available for the uninsured crop and a subsequent insured crop is PP on the same acreage in the same crop year (the subsequent PP crop is the 1st insured crop).

C. Acceptable Double-Cropping Records

Acceptable double-cropping records include, but are not limited to, APH acreage and production history records, settlement sheets, bin measurements, FSA maps, or FSA 578s that identify the acreage, production, and location from which the production came.

For production from double-cropped acreage that was not kept separate from non-double-cropped acreage, the AIP may allocate commingled first/second crop production to that acreage in proportion to the liability for the acreage that was not double-cropped, provided the yields are representative as described below:

(1) This allocation procedure applies to commingled production from the first crop that is double-cropped (i.e., wheat production from acreage planted to a second crop and not planted to a second crop) as well as the second crop that is double-cropped (i.e., soybean production from acreage planted after a first crop and not planted after a first crop). Refer to paragraph 607. AIPs may divide total production by total acres to allocate commingled production when the:

C. Acceptable Double-Cropping Records (continued)

(a) liability per acre is the same for the crop on the acreage that was and was not double-cropped;

(b) crop was not insured or was not an insurable crop; or

(c) liability is not known or is not readily available to be obtained (e.g., year in question is 10 or 11 years ago and was insured with different AIP).

(2) The amount of allocated production must be representative of the yields per acre, for the particular year and area from both double-cropped and non-double-cropped acreage (e.g., the amount of allocated production is reasonable compared to the average yields per acre for the area and that all such production would not have reasonably came from only the first crop acreage or the second crop acreage).

Note: Potential production from appraised acreage (including acreage by-passed by a processor) of an insured crop would meet the requirement for records of acreage and production that show double-cropping history, provided it also meets the criteria in B above. Short-rated wheat acreage cannot be considered for double-cropping history since such acreage is not appraised and does not meet the criteria above.

D. Examples of Double-Cropping Eligibility for Planted Acreage

Example 1: A producer on Farm A had double-cropped 300 acres of wheat and soybeans three years ago. This same producer on Farm B (same county) had double-cropped 300 acres of wheat and soybeans the previous year. These are the only double-cropping records this producer has for the last four crop years. This insured would be eligible for 300 acres of double-cropping wheat and soybeans for the current crop year in this county.

Example 2: A producer on Farm A double-cropped 200 acres of wheat and soybeans for one year out of the last four crop years and for another year out of the last four crop years, the same producer double-cropped 200 acres of wheat and sunflowers on Farm B (same county). The insured would be eligible for 200 acres of double-cropping wheat in this county.

Example 3: If an insured double-cropped 50 acres somewhere in the county and the insured's unit structure is an EU with different fields and different APHs, which 50 acres will be considered the double-cropped acreage that the AIP pays one hundred percent (100%) on the first insured crop acres on which a second crop is planted? The insured has the choice of whichever 50 acres in the county he/she desires. If the insured is using someone else's double-cropping records, refer to example 4 below.

D. Examples of Double-Cropping Eligibility for Planted Acreage (continued)

Example 4: The insured had no double-cropping history of his/her own in the county in which the claim is being made. However, part of the land the insured is farming this crop year is land he/she acquired from another person.

Out of 10 fields of the 1st insured crop (wheat) planted in the county, 3 of those fields (fields A, B, C in tract 1044) of section 20 have a 2nd crop (soybeans) planted. Of those 10 fields, two of those fields were farmed by another person in previous crop years. The other person has double-cropping records for 5 fields of wheat followed by soybeans in the county for two of the last four crop years. These records show that two of these fields (fields A and C) are the exact same acreage on which the insured planted the wheat followed by soybeans. Field B is not the same exact acreage.

Will the insured be able to receive a one hundred percent (100%) wheat indemnity payment on fields, A, B, and C if the 1st and 2nd crop acreage in all three of these fields suffered a loss and an indemnity is due on both crops? The insured will be able to receive a one hundred percent (100%) indemnity payment on the wheat planted in fields A and C. However, the insured will only be able to receive a thirty-five percent (35%) indemnity payment on field B, since field B was not one of the fields for which the other person had double-cropping history.

Example 5:

1st insured Crop for 2020 crop year: Wheat Planted History: 2014 CY 100 acres of wheat harvested 2015 CY 200 acres of wheat harvested 2016 CY 0 acres of wheat planted 2017 CY 0 acres of wheat planted 2018 CY 300 acres of wheat; not harvested/not appraised. 2019 CY 0 acres of wheat planted.	2nd insured crop for 2020 crop year is Soybeans Planted History: 2014 CY 100 acres of soybeans planted on wheat acreage. 2015 CY 200 acres of soybeans planted on wheat acreage. 2016 CY 300 acres of soybeans planted 2017 CY 250 acres of soybeans planted 2018 CY 300 acres of soybeans planted on wheat acreage 2019 CY 0 acres of soybeans planted
Based on the 1st insured crop wheat, the insured has 200 acres of double-cropping history in two out of the past four crop years of the 1st insured crop. You cannot count 2018 as a double-cropping year because the UH wheat acreage was not appraised. In the three years wheat was planted, there were two years in which wheat was followed by soybeans – 2014 and 2015, and out of those two years, the greatest number of acres double-cropped was 200.	

D. Examples of Double-Cropping Eligibility for Planted Acreage (continued)

Example 6: Total cropland 2,545.9. In 2020, the insured planted, reported, and harvested 399.9 acres of insured winter (fall-planted) wheat. Based on the following history, what amount of soybean acreage would be eligible for a one hundred percent (100%) payment due to the double-cropping history?

Crop History from Insured's Records or APH Record						
Crop Year	**Oats**	**Corn**	**Soybeans**			**Wheat**
			NFAC Practice	**FAC Practice**	**Total Acres**	
2019	0.0	793.4	816.7	341.3	1158.0	349.6
2018	0.0	805.3	954.8	106.9	1061.7	106.9
2017	0.0	909.4	950.9	50.9	1001.8	200.8
2016	20.0	979.3	979.1	0.0	979.1	0.0
2015	30.0	0.0	1079.1	0.0	1079.1	0.0
2014	0.0	0.0	885.7	191.6	1077.3	268.7

341.3 acres would be the maximum acreage that could be claimed for double-cropping in the 2020 crop year. Assume no soybeans in the NFAC column followed failed wheat. The BP requires two years of double-cropping in at least two of the last four crop years in which the first insured crop was planted. Per the DC history above, 341.3 FAC acres is the greatest number of soybean acres that have been DC in two of the last four CYs in which the first insured crop was planted.

Crop Year	Wheat (1st Insured crop in 2020 Crop Year)	1st Crop Planted (Yes/No)	FAC Soybeans in the last 4 crop years the 1st insured crop was planted
2019	349.6	Yes	341.3
2018	106.9	Yes	106.9
2017	200.8	Yes	50.9
2016	0.0	No	n/a
2015	0.0	No	n/a
2014	268.7	Yes	191.6
Maximum FAC acres based on at least two of the last four crop years that the first insured crop was planted			341.3

E. Limitations of Number of Double-Cropped Acres

The receipt of a full indemnity payment on a crop or crops in a double-crop situation is limited to the greatest number of acres for which the insured has double-cropped in a CY for the time period described in subparagraph 603A(3)(a) or (b). If there are two or more years of qualifying double-crop history in this four-year period, the receipt of a full indemnity payment on a crop or crops in a double-crop situation is limited to the highest number of acres double-cropped within the applicable four-year period unless DC history is determined in accordance with subparagraph 603A(3)(a)(iii). If there are not at least two years of qualifying double-crop history, no double-cropping eligibility exists. For PP eligibility on double-crop acres, refer to the PPSH.

Example 1: The producer has the two years of required double-crop history and of these years, double-cropped 40 acres in the 2018 CY and 50 acres in the 2016 CY. 50 acres qualify for double-cropping eligibility.

Example 2: The producer has qualifying double-crop history in each of the last four crop years that the 1st insured crop was grown. Of these years, the insured double-cropped 40 acres in the 2019 CY, 40 acres in the 2018 CY, 60 acres in the 2017 CY, and 45 acres in the 2015 CY. 60 acres qualify for double-cropping eligibility.

604 Subsequent Planted Crops

A subsequent crop is a crop following a 2nd crop (i.e., 3rd, 4th, etc.) or following an insured crop that is prevented from being planted after a 1st insured crop.

(1) Insurance is not provided for subsequent crops unless:

(a) it is a practice that is generally recognized by agricultural experts or the organic agricultural experts for the area to plant three or more crops for harvest on the same acreage in the same crop year, and

(b) additional coverage insurance provided under the authority of the Act is offered for the 3rd or subsequent crop in the same crop year.

(2) Insurance will only be provided for a subsequent crop if the criteria in both items (a) and (b) below are met.

(a) The insured must provide records acceptable to the AIP that show:

(i) The insured has produced and harvested the insured crop following two other crops that were harvested on the same acreage in the same crop year in at least two of the last four years in which the insured produced the insured crop; or

(ii) The applicable acreage has had three or more crops produced and harvested on it in at least two of the last four years in which the insured crop was grown on it; and

(b) The amount of insurable acreage must not exceed one hundred percent (100%) of the greatest number of acres for which the insured has provided the records required in item (2)(a) above.

605 Loss Adjustment

A. Inspection and Appraisal of 1st Insured Crop

(1) On an inspection for the 1st insured crop, the adjuster must obtain a certification from the insured certifying his/her intent to:

(a) plant a 2nd crop on any of the acreage released, or
(b) cash rent to a person who plans to plant an insured crop on 1st crop acreage.

Refer to paragraph 602 for more information regarding cash renting 1st insured crop acreage and also subparagraph 601B(2)(c) regarding the insured's written notice requirements. The election to not insure the 2nd crop must be made as specified in subparagraph 601B(2).

(2) The insured can elect not to insure a 2nd crop on a 1st insured crop unit, when only a portion of the 1st insured planted crop unit is being released for another use and it is unknown whether there will be a loss on the 1st insured crop unit. The election applies to all 2nd crop acreage on the unit of the 1st insured crop.

(3) If the insured 1st crop is insured under the BP, and the insured does not plan to insure the 2nd crop acreage, the AIP must obtain a signed written notice (signed certification) from the insured at this time so stating, unless it is for a ARPI crop policy. Refer to subparagraph 601B(2)(b)(ii) if a 1st crop, 2nd crop, or both crops are insured under ARPI policies. Follow the individual AIP's instructions regarding the document to use in the completion of the written notice (certification). Refer to subparagraph 601A(9) and subparagraph 601B(2)(c) above for information pertaining to written notices.

(4) If the insured plans to plant and insure a 2nd crop, explain the insured's requirements about keeping separate production records and the consequences if the insured cannot provide the required records, as explained in subparagraph 601B(3)(e) above. Refer to paragraph 606 instructions below for recording the separate production on the PW.

(5) When it is known that some acreage of the 1st insured crop will be planted to a 2nd crop, and this acreage is going to be appraised, it needs to be appraised separately from the acreage that will not be planted to a 2nd crop. Refer to subparagraph 921A for information pertaining to when it is known that a specific part of the 1st insured crop acreage in a field will be or probably will be planted to a 2nd crop.

B. Inspection of 2nd Insured Crop

(1) If the insured has any other insured crops, there is the potential of having 2nd crop acreage that is insured. Verify whether the crop being inspected is insured 2nd crop acreage.

(2) When there is 1st and 2nd crop acreage within the same unit, obtain the insured's separate records of production of the 2nd crop acreage. Refer to subparagraph B(3)(e) for the record requirements. If the required records have not been kept, the PTC for the 1st and 2nd crop must include the allocation of production as stated in subparagraph C below.

C. How to Prorate Production

When separate records of crop production have not been kept for 1st insured crop acreage and 2nd crop acreage, the production must be prorated. Use the same formula as is used for commingled production in paragraph 1233. Also, refer to the example in the first Q&A in paragraph 607.

606 Production Worksheet Entries for 1st & 2nd Insured Crops

A. Codes for 1st and 2nd Crops

The following codes apply to all policies, except clams and nursery, and apply to all insurance plans, except WFRP and Livestock. More than one code may apply to a claim unit, but only one code per loss line.

The multiple cropping code(s) shown below must be entered on the PW (except replant claims) by the adjuster or any other person authorized to handle the claim. The adjuster must verify the multiple cropping code(s) match(es) the insured's elected option on the certification form. If the AIP's system automatically generates the multiple cropping code(s), the adjuster must verify the code correlates with the insured's elected option on the certification form for 1st or 2nd crop acreage. The insured's elected option on the certification form, and when applicable, the adjuster's verification of the insured's actual actions, must be maintained in the insured's loss file.

When insureds do not certify their intent for the 1st crop acreage, the AIP shall limit the indemnity or PP payment to thirty-five percent (35%). However, if an insured's certification limits him/her to a 35 percent payment, the appropriate codes would be used.

Example: The respective code to reinstate the remaining sixty-five percent (65%) (indemnity or PP payment), if thirty-five percent (35%) had already been paid; or one hundred percent (100%) if thirty-five percent (35%) had not already been paid. The reverse also applies when the certification form indicates the insured is entitled to one hundred percent (100%) payment but actions limit insured to thirty-five (35%).

A. Codes for 1st and 2nd Crops (continued)

Codes for Insured Crop Loss Lines	Definition	Use Only When...
WI (on planted acres)	Waive insurance on 2nd insured crop acreage 100% Indemnity on 1st insured crop acreage	The insured waives insurance on 2nd crop acreage contained in unit of a 1st insured planted crop. (1) This waiver is based on the unit structure for each individual 1st insured planted crop unit that contains 2nd crop acreage; e.g., 100.0 acres of failed wheat, 1st insured crop (unit 0001-0001OU). Soybeans (2nd crop) are insured and planted on 10 acres (unit 0001-0003OU soybeans) of the failed wheat acres (unit 0001-0001OU). The insured waives insurance on the 10.0 acres of soybeans (2nd crop acres). Soybeans, 2nd crop acres (also unit 0001-0003OU) are planted on 150 acres of the failed wheat (unit 0001-0002OU), but the insured elects not to waive insurance on the 150.0 acres of soybeans (2nd crop acres) in unit 0001-0003OU soybeans.
WI (on planted acres) (continued)	Waive insurance on 2nd insured crop acreage 100% Indemnity on 1st insured crop acreage	(2) The waiver must be done by the time specified in paragraph 601 and cannot be accepted at a later date. Once the waiver is signed, it cannot be retracted at a later date. (3) Insurance cannot be waived on 2nd crop acreage when the 1st insured crop acreage was prevented from planting.
NS (on planted acres)	No 2nd <u>insured</u> crop planted on 1st insured crop acres 100% Indemnity on 1st insured planted crop acreage If insurance is waived for 2nd crop, use WI code above.	(1) The 2nd crop planted is not insurable; (2) At the time of the final inspection for the 1st insured crop acres, the AIP accepts the insured's certification that no 2nd crop will be planted; or (3) The insured did not waive insurance on the 2nd crop, the indemnity for the 1st insured crop has not been processed yet, and the adjuster has verified after it is too late to plant a 2nd crop that a 2nd crop was not planted. If an indemnity payment of 35 percent has already been made on the 1st insured crop acreage and it is determined that a 2nd insured crop was not insured, or if insured, was not planted, the RI code would be used rather than the NS code. Refer to the RI code.

A. Codes for 1st and 2nd Crops (continued)

Codes for Insured Crop Loss Lines	Definition	Use Only When...
NS (on planted acres) (continued)	No 2nd insured crop planted on 1st insured crop acres 100% Indemnity on 1st insured planted crop acreage If insurance is waived for 2nd crop, use WI code above.	If someone other than the insured plants a 2nd crop on any of the 1st insured crop acreage, policy provisions require the insured to notify their AIP of this.
NS (on PP acres)	No 2nd crop on pp 1st insured crop acres 100% PP payment on first insured crop acreage	The AIP, in accordance with paragraph 45 of the PPSH, allows and accepts the insured's certification that no 2nd crop will be planted for harvest, or an approved planted cover crop or volunteer crop will not be hayed (including swathed or windrowed), grazed, or cut for silage, haylage, or baleage from the PP acreage prior to November 1, or otherwise harvested (e.g., harvested for grain, or seed) at any time. (1) If the AIP cannot or does not allow the insured's certification, an initial PP payment of 35 percent will be made as stated in the PPSH. (2) AIPs should require insureds to sign a statement certifying they will notify them if another person plants a second crop for harvest on the PP acreage (1st insured crop) or if another person hays (including swaths or windrows), grazes, or cuts for silage, haylage, or baleage an approved cover crop or volunteer crop prior to November 1st, or otherwise harvests (e.g., harvests for grain, or seed) a cover crop or volunteer crop at any time. (3) If 35 percent of the PP payment has been made and it is determined the insured is entitled to the remaining 65 percent of the PP payment, the RI code rather than the NS code will be used. Refer to the RI code for PP.

A. Codes for 1st and 2nd Crops (continued)

Codes for Insured Crop Loss Lines	Definition	Use Only When...
DC	Meets Double-Cropping requirement 100% Indemnity or PP payment on 1st insured crop	It has been verified the insured meets all double-cropping requirements as stated in paragraph 603.
IR	65% Indemnity Reduction of the 1st insured crop (planted acreage)	Double-cropping eligibility does not apply, and insurance was not waived on the 2nd crop acreage. (1) The insured is unsure if a 2nd crop will be planted; (2) The insured states a 2nd crop will be planted and insured; (3) A 2nd crop is insured and has been planted; (4) The AIP does not allow or does not accept the insured's certification that a 2nd crop will not be planted; or (5) The AIP accepts the insured's certification that a 2nd crop would not be planted and 100% of the indemnity was paid. However, it subsequently is planted, suffers an insurable loss, and the insured accepts the 2nd crop indemnity.
RP	65% Reduction of PP payment of the 1st insured crop (PP acreage)	It is determined that a PP payment is payable on the 1st insured crop and double-cropping eligibility does not apply but: (1) At the time of final inspection for the PP payment, the insured is unsure if any of the following will occur, or the insured states or certifies that one of the following will occur: (a) 2nd crop will be planted for harvest after the FPD (or after the LPP, if applicable) for the 1st insured crop; (b) Cover crop will be planted and hayed (including swathed or windrowed), grazed, or cut for silage, haylage, or baleage after the LPP (FPD if LPP does not apply) but prior to November 1;

A. Codes for 1st and 2nd Crops (continued)

Codes for Insured Crop Loss Lines	Definition	Use Only When...
RP (continued)	65% Reduction of PP payment of the 1st insured crop (PP acreage)	(c) Volunteer crop will be hayed (including swathed or windrowed), grazed, or cut for silage, haylage, or baleage after the LPP (FPD if LPP does not apply) but prior to November 1; or (d) A cover crop or volunteer crop will be otherwise harvested (e.g., harvested for grain, or seed) at any time. (2) The insured or someone else actually carries out one of the items in (1) above. (3) The AIP accepted the insured's certification that any of the items in (1) above would not occur and 100% of the PP payment was made. However, subsequent to the certification and payment of 100% of the PP payment, the insured or another person carries out one of the items in (1) above.
RI (for planted acres indemnity)	Restore Indemnity of 1st insured crop to 100% (planted acres)	The 1st insured crop's indemnity was reduced to 35%, and the: (1) Insured 2nd crop did not suffer a loss; or (2) Adjuster verified a 2nd crop was not insured, or if insured, was not planted; or (3) Indemnity of 1st insured crop was erroneously reduced; or (4) Insured waives indemnity on the 2nd crop acreage. Adjusters will only use this code on corrected claims they prepare that also need the indemnity restored. If no corrected claim is required, the AIP will use this code internally in the computer program. Refer to paragraph 1238 for the reasons that corrected claims are prepared. Documentation must be placed in the insured's loss file that explains why the indemnity is being restored.

A. Codes for 1st and 2nd Crops (continued)

Codes for Insured Crop Loss Lines	Definition	Use Only When...
RI (for PP Payment)	Restore PP Payment of 1st insured crop to 100%	The first insured crop PP Payment was reduced to 35% and the: (1) Adjuster verified a 2nd crop was not planted, a volunteer or cover crop was not hayed (including swathed or windrowed), grazed, or cut for silage, haylage, or baleage prior to Nov. 1, or a volunteer or cover crop was not otherwise harvested (e.g., harvested for grain, or seed) at any time. The first insured crop PP Payment was reduced to 35% and the: (2) Insured stated or certified a 2nd crop would be planted, or a volunteer or cover crop would be hayed (including swathed or windrowed), grazed, cut for silage, haylage, or baleage, or otherwise harvested. However, subsequent to the statement or certification, the adjuster verifies that a 2nd crop was not planted, or a volunteer or cover crop was not hayed (including swathed or windrowed), grazed, or cut for silage, haylage, or baleage prior to November 1, or otherwise harvested (e.g., harvested for grain, or seed) at any time. If a cover crop or volunteer crop that still exists November 1 or later appears to be harvestable, the PP payment cannot be restored until the final disposition of the cover crop or volunteer crop is determined. (3) PP payment of 1st insured crop was erroneously reduced. Adjusters will only use this code on corrected claims they prepare that also need the PP payment restored. If no corrected claim is required, the AIP will use this code internally in the computer program. Refer to paragraph 1238 for the reasons that corrected claims are prepared. Documentation must be placed in the insured's loss file that explains why the indemnity was restored.

A. Codes for 1st and 2nd Crops (continued)

Codes for Insured Crop Loss Lines	Definition	Use Only When...
FC	1st insured Crop acreage for which no other multiple cropping code applies and 100% indemnity is applicable	Example: First insured crop unit 0001-0001BU is 80.0 acres of wheat (Field A, 30.0 acres and Field B, 50.0 acres.) The unit suffers a loss. However, only Field B contributed to the unit loss. The acres in Field A did not. The AIP accepts the insured's certification that no 2nd crop will be planted on Field B and that soybeans (2nd crop) will be planted on Field A. Even if the soybeans (2nd crop) planted in Field A suffers an insurable loss, the 1st crop acreage on these 30.0 acres would receive 100% indemnity. Therefore, at the time unit 0001-0001BU wheat indemnity is paid, 50.0 acres would be coded as NS, and the 30.0 acres would be coded as FC, indicating the insured is paid 100% on the entire unit. The FC code cannot be used when all of the first crop acres were planted to a second crop, unless some of the 1st crop acres were not subject to an indemnity reduction.
SC	2nd Crop (or Subsequent, if PP) Acreage that is Insured	This insured crop was planted on the same acreage of the 1st insured crop (planted or prevented from planting) within the same crop year, and if the 1st insured crop acreage was planted acreage, the indemnity for the 2nd crop acreage was not waived. Note: This also applies to subsequent crop acreage that is double crop PP acreage. The indemnity for 2nd crop acreage cannot be waived if the insurable loss on the 1st insured crop was PP.
SW	Second Crop Acreage Insured - Indemnity Waived Indemnity cannot be waived when the first insured crop has payable PP Payment.	(1) The acreage for the entire unit is 2nd crop acreage for which the indemnity is waived. (2) The acreage on this claim unit has both 1st insured crop planted acreage and the 2nd crop acreage indemnity is waived, or (3) The acreage on this claim unit has 2nd crop acreage on which part of the 2nd crop acreage indemnity is waived and some of it is not. The indemnity waiver is based on the unit structure for each individual 1st insured crop unit that contains 2nd crop acreage.

A. Codes for 1st and 2nd Crops (continued)

Codes for Insured Crop Loss Lines	Definition	Use Only When...
SW (continued)	Second Crop Acreage Insured - Indemnity Waived Indemnity cannot be waived when the first insured crop has payable PP Payment.	Waiver of the 2nd crop acreage indemnity can be allowed when acreage of a 2nd crop unit lies in two different units of the 1st insured crop acreage. For example: 100.0 acres of failed wheat, 1st insured crop (unit 0001-0001OU). Soybeans, 2nd crop (unit 0001-0003OU), is insured and planted on 10.0 acres of Field A, the failed wheat acres (unit 0001-0001OU). The insured waives the payable indemnity on the 10.0 acres of soybeans (second crop acres). Soybeans (second crop) is insured and planted on 150.0 acres of the failed wheat (unit 0001-0002OU), but the insured elects not to waive the payable indemnity on the 150.0 acres of soybeans (2nd insured crop acres) that are also part of unit 0001-0003OU soybeans. Waiver of the 2nd crop acreage indemnity cannot be allowed when acreage of a 2nd crop unit lies in only one unit of the 1st insured crop acreage. For example: Unit 0001-0001OU consisted of 100.0 acres of failed wheat acres – 50 acres, Field A and 50 acres, Field B. Unit 0001-0002OU soybeans is the same legal description as unit 0001-0001OU wheat. Field A and B are planted to soybeans; i.e., total of 100.0 acres soybeans (2nd crop). In this situation, the insured cannot waive only a portion of the 100.0 acres since the acreage lies in the unit structure of the 1st insured crop. The insured can either waive indemnity on all 100.0 acres, or none. Exception to this would be if part of the 100.0 acres qualifies for double-cropping; e.g., Field A (50.0 acres) qualifies for double-cropping acreage. Then the indemnity on the remaining 50.0 acres in Field B that did not qualify for double-cropping acres could be waived.

B. Multiple-Cropping Exception Flag (Field 41 of P21 Record in the PASS)

(1) Multiple-Cropping codes (M-C codes) are required to be transmitted for each line of the PW that is transmitted on the record entitled "Production Loss Detail-P21 Record" (hereafter called the P21 Record) through the RMA's PASS. The M-C code identifies whether the indemnity amount due for the line is one hundred percent (100%) or as applicable, reduced by sixty-five percent (65%) due to a 1st and 2nd insured crop on the same acreage in the same crop year.

B. Multiple-Cropping Exception Flag (Field 41 of P21 Record in the PASS) (continued)

(2) However, current PASS processing methods may not calculate indemnities properly when there is a net negative indemnity (production exceeds guarantee) on some acreage (loss lines) not subject to the sixty-five percent (65%) reduction. The PASS uses a negative (-) and positive (+) type calculation to determine the indemnity amount for all loss lines in the unit. This can result in no indemnity due when the sixty-five percent (65%) reduction is applicable on some acreage in a unit even though the overall unit is in a loss situation and an indemnity, although reduced, should be paid. It can also result in the indemnity not being as much as it should be. In these cases, the usual calculation must be modified and an exception flag will be used.

(3) It is expected that AIPs will automate the calculation needed to determine whether the exception flag will be used and the modification of the indemnity calculation. However, for the purpose of understanding the steps used in making this determination and the modified indemnity calculation, the following is provided:

Step 1: Determine if any of the lines on the PW and P21 Record within a unit has an M-C Code of "IR" and there are other lines on the PW and P21 Record with any of the following codes (DC, FC, WI, SC, NS, RI).

Step 2: For any of the loss lines having one of the codes in the parenthesis in Step 1, determine the UDQ or "Loss" for each of these loss lines. (Loss guarantee minus the PTC) e.g., loss guarantee of 1200 bu. minus 1300 PTC = -100 bu. (negative farm unit deficiency).

Step 3: Determine the positive and negative dollar "Payable Indemnity" for each of the loss lines from Step 2. (Unit Deficiency Quantity) X price election).

Step 4: Sum the results of step 3 (sum of "Payable Indemnity" lines).

Step 5: If the results of step 4 is less than or equal to "0," then .35 is multiplied by the indemnity for all the lines in the unit, except any line with a M-C Code of "SW" or any line with a Guarantee Reduction flag of *"P" or *"E."

*"P" = PP and "E" = PP when there are no remaining eligible acres for the crop claimed as PP and remaining eligible acres from another unit or crop are used to pay PP payment for the crop claimed.

Step 6: If the M-C Exception Flag is applicable, a "Y" is transmitted in Field 41 (M-C Exception Flag) of the P-21 record for the lines with a M-C Code of DC, FC, WI, SC, NS, and RI.

(4) The lines with DC, FC, WI, SC, NS, and RI will be calculated at one hundred percent (100%) indemnity unless this exception exists.

B. Multiple-Cropping Exception Flag (Field 41 of P21 Record in the PASS) (continued)

Example 1: Indemnity has been calculated without the exception to illustrate how there is a loss payable but due to summing negative and positive lines and then applying the multi-cropping percentage, it results in a no indemnity due claim.

Example 1 without exception: Assume the insured has 1.000 share.

Loss Line	Stage Guar.	Acres	Line Guar.	PTC	Loss (UDQ)	PE	Indem. Before M-C Code	MC Code	% of Indem.	Payable Indem.
1	40	25.0	1000.0	1200.0	-200.0	$3.35	-$670.00	NS	100%	-$670.00
2	40	25.0	1000.0	900.0	+100.0	$3.35	+$335.00	IR	35%	+$117.25
3	20	25.0	500.0	350.0	+150.0	$3.35	+$502.50	DC	100%	+$502.50
			2500.0	2450.0	+50.0					-$50.25

Note: No indemnity due even though the unit loss UDQ is 50 bu.

Example 1 with the M-C exception: Assume the insured has 1.000 share.

Loss Line	Stage Guar.	Acres	Line Guar.	PTC	Loss (UDQ)	PE	Indem. Before M-C Code	MC Code	MC Exc. Flag	% of Indem. With Except	Payable Indem.
1	40	25.0	1000.0	1200.0	-200.0	$3.35	-$670.00	NS	X	=35%	-$234.50
2	40	25.0	1000.0	900.0	+100.0	$3.35	+$335.00	IR		=35%	+$117.25
3	20	25.0	500.0	350.0	+150.0	$3.35	+$502.50	DC	X	=35%	+$175.88
			2500.0	2450.0	+50.0						$58.63

Example 2: Indemnity has been calculated without the exception to illustrate how there is a positive loss payable, and the indemnity amount calculated out in this instance is a positive indemnity. However, when the indemnities for all lines (only 1 line in this example) with M-C Codes of DC, FC, WI, SC, NS, and RI are summed, there is a negative figure, which means the exception applies. In this instance although the calculated indemnity is a positive indemnity, the indemnity is not as much as it should be. When the indemnity is calculated with the Exception flag, the indemnity is increased.

Example 2 without exception: Assume the insured has 1.000 share.

Loss Line	Stage Guar.	Acres	Line Guar.	PTC	Loss (UDQ)	PE	Indem. Before M-C Code	MC Code	MC Exc. Flag	% of Indem. With Except	Payable Indem.
1	26.7	40.0	1068.0	1449.0	-381.0	$4.83	-$1840	NS	X	100%	-$1840.00
2	26.7	91.8	2451.0	936.4	+1514.6	$4.83	+$7316	IR		35%	+$2561.00
			3519.0	2385.4	+1136						+$721.00

Note: In this instance, the only line to total is the NS loss, line. Since $-1,840.00 is less than $0.0, this indemnity calculation qualifies for the M-C Exception.

B. Multiple-Cropping Exception Flag (Field 41 of P21 Record in the PASS) (continued)

Example 2 with the M-C exception: Assume the insured has 1.000 share.

Loss Line	Stage Guar.	Acres	Line Guar.	PTC	Loss (UDQ)	PE	Indem. Before M-C Code	MC Code	MC Exc. Flag	% of Indem. With Except	Payable Indem.
1	26.7	40.0	1068.0	1449.0	-381.0	$4.83	-$1840	NS	X	=35%	-$644.00
2	26.7	91.8	2451.0	936.4	+1514.6	$4.83	+$7316	IR		=35%	+$2561.00
			3519.0	2385.4	+1136						+$1917.00

Note: In this instance, the indemnity is increased due to the MC-Exception being applied.

C. Entry Instructions in Section I of the Production Worksheet

Note: For All Crops Except Raisins and Florida Fruit Trees.

Element/Item Number	Description
16. Field ID	For each line entry for which there is a multi-crop code, enter the Field identification symbol from a sketch map or an aerial photo.
17. Multi-Crop Code	Enter the applicable two-digit multi-crop code (refer to subparagraph 606A above for the applicable multi-crop codes and additional instructions regarding situations where a second crop will be planted on first (original) crop acreage within the same crop year). For any 3rd (subsequent or additional) crop, enter only the field identification symbol in item 16.

Narrative: Document if 2nd crop acreage is involved with this crop unit, the name of the 1st insured crop planted within the crop year on the 2nd crop acreage. Enter the field identification symbol, the unit number, and policy number (if known) if different than this claim. If more space is needed, document on a Special Report, and enter "See Special Report." Attach the Special Report to the PW.

D. Entry Instructions for Section II of the Production Worksheet

Separate lines are required:

(1) for production from 1st and 2nd crop acreage, or
(2) when a 2nd crop will be or is planted on the 1st crop acreage within the same crop year.

If production has not been kept separate, there must be separate lines of pro-rated production as stated in subparagraph 601B(3)(e).

Note: For All Crops Except Raisins and Florida Fruit Trees.

D. Entry Instructions for Section II of the Production Worksheet (continued)

Element/Item Number	Description
47b. Field ID	If the claim is for a 1st or 2nd crop and the 2nd crop is or will be planted on 1st crop acreage within the same crop year, enter the field identification symbol. For any 3rd (subsequent or additional) crop, enter only the field identification symbol. Refer to the Narrative instructions.
48. Multi-Crop Code	Enter the applicable two-digit multi-crop code (refer to subparagraph 606A for the applicable multi-crop codes and additional instructions regarding situations where a second crop will be planted on first (original) crop acreage within the same crop year). For any 3rd (subsequent or additional) crop, enter only the field identification symbol in item 16.
49.-52.	When production from 1st and 2nd crop acreage was not kept separate, prorate the production as stated in subparagraph 601B(3)(e), and enter the following: "Prorated Production –1st and 2nd crop."
56. Bu., Ton, Lbs., Cwt.	Enter the calculated number of prorated bushels, tons, lbs., or Cwt. (units of measure as appropriate for the crop) due to commingling production from 1st and 2nd crop acreage.

607 1st & 2nd Crop Questions & Answers

The 1st insured crop is 130 acres of winter wheat on unit 0001-0001OU. The share is one hundred percent (100%), the price election is $3.35, and the level of coverage is sixty-five percent (65%). Field A has 100 acres of IRR winter wheat with a 50 bu. per-acre guarantee. Field B has 30 acres of NIRR winter wheat with a 25 bu. per-acre guarantee. The total guarantee for unit 0001-0001OU wheat is 5,750 bu.

All wheat acreage is harvested and an indemnity is due. Total harvested PTC from the 130 acres is 3,000.0 bu. However, separate production records for fields A and B were not kept.

After completion of wheat harvest, fields B and C are timely planted to insured soybeans. The insured does not qualify for the double-cropping exception. Therefore, the reduction specified in section 15 of the BP will apply to the wheat acreage in field B.

Field A	Field B	Field C
100 acres IRR wheat 1st insured crop	30 acres NIRR Wheat 1st insured crop	30 acres Fallow
Unit 0001-0001OU Wheat	Unit 0001-0001OU Wheat	Unit 0001-0001OU
No insured 2nd crop	2nd Crop = 30 acres of Soybeans – Unit 0001-0001OU	1st insured Crop = 30 acres of Soybeans – Unit 0001-0001OU

Q1: After appropriately applying the reduction, what would the initial wheat loss indemnity be?

A1: The following answer is given under the assumption that it is known, at the time the initial payment is made, that no insured 2nd crop will be planted in field A: Since separate records were not kept on the wheat acres subject to reduction, prorate wheat production based on the total bushel liability, as follows:

The Total Wheat Guarantee is 5,750 bu.
(Field A = 100 ac. X 50 bu. = 5,000 bu. guar + Field B = 30 ac. X 25 bu. = 750 bu.)

Liability for Field B (30 acres of NI wheat) 30 x 25 = 750 bu.
750 bu. (NI wheat guarantee in field B) ÷ 5,750 bu. Total Wheat Guarantee = .1304 Proration Factor.

In this case, PTC for the NIRR acreage (field B) is 391.2 bu. (3,000 bu. total PTC x .1304 Proration Factor) which is 358.8 bu. less than the guarantee for the acreage (750.0 - 391.2 = 358.8).

The initial payment for fields A and B is $8,432 and is calculated as follows:

358.8 bu. X $3.35 per bu. X 1.000 share = $1,201.98

$9,213 total indemnity for fields A & B (5,750 bu. – 3,000 bu. = 2,750 bu. X $3.35 price election X 1.000 share) – $781. = $8,432 = indemnity for fields A and B.

Q2: Same scenario as question 1 except this time separate wheat production records were kept for fields A and B. 2,200 bu. were harvested from the 100 acres in field A and 800 bu. were harvested from the 30 acres in field B. What would the initial wheat indemnity be?

A2: Since there is no loss attributable to the 30 acres (field B) of NIRR wheat (800 bu. of PTC exceeds the 750 bu. guarantee for the acreage, the wheat loss would not be limited. The wheat indemnity would be $9,212.50 and rounded to $9,213.

The 2nd crop is soybeans. Unit 0002-0001BU contains 60.0 insured acres of which (field B) 30 acres are NIRR-FAC 2nd insured crop and (field C) 30 acres are NIRR-NFAC 1st insured crop. The NIRR-FAC guarantee (field B) is 25 bu./ac. and the NIRR-NFAC guarantee (field C) is 35 bu./ac. Total guarantee for unit 0002-0001BU soybeans is 1,800 bu. The share is one hundred percent (100%).

Field A	Field B	Field C
100 Wheat acres (1st insured crop) Unit 0001-0001BU Wheat	1st insured crop is 30 acres of Winter Wheat, Unit 0001-0001BU	1st Insured Crop is 30 acres of NIRR-NFAC Soybeans
No insured 2nd crop	2nd insured Crop NIRR-FAC Soybeans Unit 0002-0001BU Soybeans	Unit 0002-0001BU Soybeans

The entire soybean acreage is harvested and the insured accepts an indemnity based on a claim indicating the harvested PTC from the 60 acres is 1,500 bu. However, separate production records for fields B and C were not kept. For questions 3-5, assume the 1st crop wheat (unit 0001-0001BU – fields A and B) has an indemnity due.

Q3: Is an indemnity payment for the other sixty-five (65%) of the wheat loss due the insured?

Total soybean guarantee is 1,800 bu. (30 ac. X 25 bu. + 30 ac. X 35 bu.)
Guarantee for Field B = 750 bu.

750 bu. guarantee for field B ÷ 1,800 bu. = .41666 rounded to .4167 proration factor

A3: PTC allocated to 2nd crop soybeans in field B would be 625.1 bu. (.4167 proration factor X 1,500 bu. total production from fields B and C). Since a soybean unit indemnity is accepted by the insured and since 625.1 bu. is less than the production guarantee for the 2nd crop soybeans acreage (750 bu.), the remaining sixty-five percent (65%) loss on Field B wheat would not be paid.

Q4: Same scenario as question 3 except this time assume separate soybean production records were kept for field B and C. 800 bu. were harvested from the 30 acres in Field B and 700 bu. were harvested from the 30 acres in field C. Is an indemnity payment for the other sixty-five percent (65%) of the wheat loss due the insured?

A4: Since 800 bu. of soybeans were harvested from field B and this amount exceeds the 750 bu. guarantee for the acreage, the remaining sixty-five percent (65%) loss on Field B wheat would be paid.

Q5: Assume separate soybean production records were kept for fields B and C except this time, the total harvested production from the 60 acres is 2,000 bu. However, only 500 bu. were harvested from the 30 acres in field B and 1,500 bu. were harvested from the 30 acres in Field C. Is an indemnity payment for the other sixty-five percent (65%) of the wheat loss due the insured?

A5: Since there is no loss for the soybean unit, the wheat loss would not be limited and the remaining sixty-five percent (65%) loss on field B wheat would be paid.

608-700 (Reserved)

PART 7 TYPES OF INSPECTIONS
Section 1 Indemnity Inspections

701 Preliminary Inspections

(1) Preliminary inspections are required when insureds give NOL before the time of harvest to: (1) replant, (2) obtain consent to put acreage to another use, (3) abandon the crop, or (4) destroy any of the insured crop that is not harvested. Unless specified otherwise in these procedures, policy provisions, or SP, the AIP must provide written consent (not verbal) to the insured when releasing acreage for any of the aforementioned actions. If the insured takes any of these actions prior to the date the AIP released the acreage, the acreage is considered destroyed without consent except as allowed for replanted acreage as outlined in subparagraph 721C(4).

(2) The insured and the adjuster's signature shown on a completed appraisal worksheet and PW as a result of a Preliminary Inspection or Final Inspection is considered to be the AIP's written consent to the insured. The date of verbal consent, if allowed by these procedures, must be documented and filed in the insured's loss file.

(3) Written consent must not be given until the AIP is satisfied:

(a) It is no longer practical to replant to the same initially planted crop when consent is being given to go to another crop and to finalize the claim. AIPs must be cautious about prematurely releasing acreage to go to a second crop, especially in situations where there is a thinner stand, there are dry soil conditions, there is the possibility that precipitation may occur, or there is sufficient time to produce a crop before the calendar date for the EOIP. Winter and spring types are considered the same crop. Refer to the exception for spring wheat replanted in counties having only fall planting dates in subparagraph 721B.

(b) It is possible to make an accurate appraisal of potential production. Certain types of damage or conditions require delays in appraisals; e.g., frost, freeze, hail, crop is still in dormancy, etc. Refer to paragraphs 921 and 924 for details. Appraisals must represent the maximum potential production that could be expected with normal weather conditions and proper crop care from the time of the appraisal through the completion of harvest.

(4) When the AIP has given written consent to destroy the UH acreage, put the acreage to another use or crop, or abandon the acreage, and the insured has not done so, the following applies:

(a) If the insured continues to care for such acreage and such acreage is harvested, the AIP will use the harvested production.

(b) The acreage can be re-appraised if harvest becomes general in the county (area) or additional damage occurs.

(c) For some crops, such as table grapes, the CP indicate that the insured must not destroy the damaged crop (or take it to another use) until the earlier of 15 days from the date the insured gave notice or the AIP gives written consent to do so. For this reason AIPs should make every effort to inspect and appraise the potential production within 15 days of the insured's NOL. Refer to the applicable CP.

Note: For acreage released for replanting that the insured has not replanted, refer to subparagraph 722C(6).

(5) During the preliminary inspection, inform the insured that:

(a) If acreage is put to another use without written consent, an appraisal will be assigned for such acreage of not less than the amount of the production guarantee. This may result in no indemnities being paid, but premium will be charged.

(b) When prior written consent is given and the acreage is not put to another use before harvest, or the acreage is harvested, the indemnity will be determined without regard to the written consent or appraisal made. Replanting to the same crop under any practice is not putting the acreage to another use or a second crop except as stated in subparagraphs 721A or B.

(6) For specific instructions regarding preliminary inspections involving late planted acreage refer to part 5, section 2 of this handbook. For specific instructions regarding PP acreage, refer to the PPSH.

702 Final Inspections

A. General Information

A final inspection (including No Indemnity Due Claims or Denied Claims) must be made in order to document production, acreage, insured and uninsured COL, and all other pertinent entries to determine the amount of indemnity, unless the notice has been withdrawn or cleared.

(1) To make adequate determination, actual visits to the field(s) where the crop is/was grown must be made.

(2) Consider information from preliminary inspections, and review the determinations of any previous inspection(s), if any.

(3) Make additional determinations as required to establish the amount of production and loss, if any.

(4) Refer to specific procedures in this handbook and the individual crop LASH for more information regarding determinations of total production, acreage, appraisals, insured/uninsured causes, shares, etc. Refer to part 5, section 2 for claims involving late planted acreage or the PPSH for PP acreage.

A. General Information (continued)

(5) Use representative strips the insured has left at harvest time, as required by the policy provisions, to determine whether harvested production is comparable to production in the strips. These representative strips are not the same as RSAs used for appraisal purposes, as described in paragraph 924.

(a) If there is a large discrepancy between harvested production and production within the strips, obtain all pertinent information needed; however, do not sign the claim(s) at this time. Contact the AIP for assistance in completing these cases. If necessary, controversial claims will be prepared (some AIPs use Non-Waiver Agreements rather than controversial claims). Refer to paragraph 1204.

(b) In the event representative strips are comparable to harvested production and the representative strips do not represent a significant portion of the insured acreage, the acreage strips will be considered as harvested; however, no production from the strips will be counted. If the portion of the insured acreage involved for representative strips represent a "significant" amount of the acreage, the production from the amount of acreage that is excessive must be included in the PTC. The AIP has the authority to develop guidelines for determining the portion of the insured acreage which would be considered "significant."

(c) If the representative strips have not been left or have been destroyed prior to the inspection, determine if production is reflective of crop residue and conditions in the area. If you are satisfied the PTC is reasonable, prepare the claim accordingly. If PTC is not reflective of crop residue and area conditions, refer the case to the AIP for assistance in handling. In some cases, this may be grounds for rejection of the claim by the AIP in accordance with the applicable BP and CP.

(6) Review the determinations of any inspection giving written consent for other use of a part of the total acreage in a unit. If the earlier inspection was incomplete or the information is incorrect, explain in Narrative of the PW or submit documentation on a Special Report.

(7) If the claim is filed by any FCIC employee or AIP employee; or LAC, agent, or anyone directly affiliated with FCIC, or an AIP; the claim must be reviewed by the AIP (or other disinterested party assigned by the AIP) prior to payment of the claim. Generally, the AIP will accompany the adjuster on the initial loss adjustment inspection and will conduct the review at the same time. If it is not known prior to the loss adjustment inspection that the claim is for an employee or any other person described herein, the adjuster is to notify the AIP immediately so that an AIP representative has the opportunity to accompany the adjuster during the inspection.

A. General Information (continued)

(8) Do not finalize claims until you are satisfied with all determinations, including but not limited to:

(a) Total disposition of the crop;

(b) Value (or RIV), if applicable of the crop needed for quality adjustment purposes. Special care must be given when there are ZMV (1.000 RIV offers or non-marketability) in a local area or extremely low market price (or extremely high RIV, if applicable) for the crop in the local marketing area. Refer to subparagraph 1102E(1) and (7) regarding reasonable RIVs and subparagraph 1102H regarding ZMV production – ZMV plants for nursery; and

(c) The insured's Certification Form, if applicable, has been received and verified. Refer to paragraph 831.

(9) If an indemnity is due, refer to the individual crop LASHs for procedure in completing the claim.

(10) No Indemnity Due claims may be due to production exceeding the guarantee.

(a) This type of "No Indemnity Due" claim must be verified by an appraisal or notification from the insured that the production exceeded the production guarantee (or value of crop exceeded the dollar guarantee, if applicable); i.e., damage/amount of loss (or revenue) was not great enough to generate a loss.

(b) If it is determined that no indemnity is due during an inspection:

(i) Complete the inspection;

(ii) Record all pertinent information on either of the following:

(A) the claim as instructed in the LASH, or
(B) if directed by the AIP, complete and have the insured sign a "Withdrawal of Claim" form (meeting the FCIC form standards) rather than prepare a "No Indemnity Due;" and

(iii) If inspection determinations indicate a reduction in premium is applicable, follow the AIP's instructions.

(11) Anytime a loss adjustment inspection takes place and the claim is denied by the AIP, a PW must be completed with at least the following information: Claim Number; Policy Number; Crop Year; Crop Code; Unit Number; Type, Class, or Variety; Practice; Stage Code "DC" (means denied claim); Acres or number of trees for tree crops; First NOL Date; Adjuster's signature; Adjuster's code number; and Adjuster's signature date.

A. General Information (continued)

Note: For the purpose of this procedure a denied claim is any claim for which the insured believes they should be paid an indemnity, replant payment, or PP payment but results in the AIP denying such a claim. The number of acres or of trees do not have to be determined for a denied claim; they can be the number of acres or of trees reported on the insured's AR.

(12) If a claim is settled on the basis of appraised production, the insured must notify the AIP if the appraised acreage is later harvested. Claims settled on appraised acreage that is subsequently harvested will be handled as follows:

(a) If the adjusted amount of harvested production exceeds the appraised production, a corrected claim will be prepared and processed using the harvested production. The insured will be required to repay any overpaid indemnity.

(b) If the adjusted amount of harvested production is less than the appraised production, and the insured harvests:

(i) After the EOIP, the appraised production will be used to adjust the loss unless the insured can prove that no additional causes of loss or deterioration of the crop occurred after the EOIP;

(ii) Before the EOIP, a corrected claim will be prepared and processed using the harvested production, and any additional indemnity amount due will be paid to the insured.

Note: Adjusted amount of harvested production is harvested production after applying any applicable adjustments; i.e., test weight, moisture, FM, QA.

(13) The standard corrected claim tolerances apply to these procedures. Refer to paragraph 1238.

B. End of Insurance Period

(1) When the calendar date for the EOIP has been reached and the crop has not been harvested, appraised production will be used to adjust the loss if the crop will not be harvested. A final inspection is required as soon as practical unless the AIP determines that insured perils (listed in the policy) delayed and prevented harvest of the crop.

(2) AIPs may settle claims based on harvested production by authorizing additional time to harvest on a case-by-case basis if the:

B. End of Insurance Period (continued)

(a) AIP determines and documents the delay in harvest is due to an insured COL;
(b) insured proves that harvest was not possible; and
(c) delay in harvest was not due to uninsured causes of loss or because the insured did not have sufficient equipment or manpower to harvest the crop by the calendar date for the EOIP.

(3) AIPs should not perform final inspections when conditions (i.e., significant snow cover, the crop is under water, or extreme wet conditions) make it impossible to obtain accurate appraisals.

(4) AIPs are expected to perform appraisals and close out any open claims after the calendar date for the EOIP once conditions improve sufficiently to do so.

(5) When an appraisal is deferred for immature crop acreage that has been released to go to another crop or use, the EOIP does not occur for such acreage until the representative areas left for the deferred appraisal have been appraised or harvested (within time frame specified in procedures or CP where there is a disagreement of appraisal amount), unless the insured failed to care for the representative areas (i.e., abandons the acreage in the representative areas). Refer to subparagraph 921B and paragraph 924 for more information about deferred appraisals.

(6) When the AIP authorizes additional time to complete loss adjustment due to an insured peril preventing harvest by the calendar date for the EOIP (as stated above), follow the instructions below:

(a) Notify RMA's RMSD via e-mail at RMA.RMSD@usda.gov when authorization is being provided to an insured or insureds, list the number of units by crop, county, and state for which the authorization was given, the reason authorization is being given. If it is anticipated that there may be additional authorizations needed for crop units, provide approximates of the preceding information (i.e., number of units by crop, etc.) and note that the information is based on approximations. RMSD will notify the other AIPs, PASD, Risk Compliance, RMA ROs, and CFOs that service the counties/states where the authorizations have been provided.

(b) If harvest completion was delayed due to an insurable cause occurring within the insurance period, any subsequent damage to the crop, due to the insurable causes specified in the contract, is covered provided that it is determined on a case-by-case basis that the insured has:

(i) Complied with the NOL or loss requirements identified in the policies and administered in accordance with the loss adjustment procedures, and

(ii) Made every reasonable attempt to harvest the crop timely and properly.

B. End of Insurance Period (continued)

(c) This does not include a mature crop that could have been harvested by the calendar date for the EOIP but was not because the insured was waiting for the moisture to decrease to avoid drying costs. In such cases, appraise the crop and finalize the claim as soon as possible after the calendar date for the EOIP.

(d) The calendar date for the EOIP is not extended. Rather, the insured is given additional time to attempt to harvest the crop in order to settle any loss on the basis of harvested production.

(e) In the above circumstances, any subsequent and unavoidable loss of production caused by insurable causes is to be considered as an unavoidable loss resulting from the original insurable cause, which prevented the timely harvest of the crop. Any avoidable loss of production is to be charged as an appraisal against the guarantee.

(f) The insured is expected to harvest the crop if a window of harvest opportunity arises. If the insured had the opportunity to harvest and failed to do so, AIPs are to appraise the acreage and finalize the claim based on the appraisal. Damage occurring after the producer had an opportunity to harvest is uninsurable.

(g) Verify and document that damage resulted from insured causes occurring during the insurance period (as clarified in B(6)(b) and (c)). Items to verify include (but are not limited to) the following:

(i) Specific variety planted.

(ii) Planting date.

(iii) Length of normal growing season needed for the insured crop variety.

(iv) Insurable causes preventing timely harvest and dates of occurrence.

(v) Area conditions, surrounding producers' situations, percent of harvest completion in the area, the adequacy of the insured's harvest equipment and efforts to harvest, and windows of harvest opportunity.

(vi) The rationale for establishing the portion of the loss resulting from causes which occurred during the insurance period and any appraisals for uninsured causes.

B. End of Insurance Period (continued)

(vii) If AIPs wish to further document that the insured was informed of the above, they should retain in the insured's file folder, a copy of the document sent or given to the insured that outlines the insured's responsibility to mitigate the damage by harvesting at first opportunity, and informing the insured that if a window of harvest opportunity occurs and harvest does not occur, appraisals will be assessed for failure to follow recognized GFPs. The date the document was mailed or given to the insured should be noted on the copy.

(viii) Photographs, video, etc., if they will conclusively verify the reasons that the crop could not be harvested by the calendar date for the EOIP. Refer to paragraph 202 for documentation requirements.

(h) If a loss is anticipated and acreage remains UH, perform an inspection on the UH acreage in the unit as soon as possible after the calendar date for the EOIP. Although it is preferred to provide the insured reasonable opportunity to harvest the crop and to settle losses on the basis of harvested production, very few claims should remain to be finalized beyond 60 days after the calendar date for the EOIP. Such cases will require extensive documentation to support proper payment of the affected claims.

(i) All applicable instructions in paragraph 702 also apply.

C. Delayed Claim

(1) A delayed claim is when the insured submits a claim (signs a final claim) later than the following, unless (2) below applies (refer to subparagraph C(3)(a) for exception to delayed claim procedure when extension of time to measure farm-stored production has been granted by the AIP):

(a) For policies other than RP, 60 days after the date of the EOIP for all acreage in the unit (when there is acreage in the unit where the insurance period ended on different date, it is the last date the insurance period ends on the unit).

Example: If a unit has corn acreage that was put to another use on July 1, and corn acreage where harvest was completed on Sept. 30, the claim must be submitted not later than 60 days after September 30; or

(b) For RP, the later of:

(i) 60 days after the last date the harvest price is released for any crop in the unit; or

(ii) The date determined in accordance with (a) above; i.e., 60 days after the date of the EOIP for all acreage in the unit.

C. Delayed Claim (continued)

(2) The insured must submit a claim within the timeframe stated in (1) above, unless the insured requests an extension in writing and the AIP agrees to such request. Extensions will only be granted if the amount of loss cannot be determined within such time period because the information needed to determine the amount of the loss is not available; or

(3) For insured crops with provisions allowing delayed measurement of farm-stored production;

(a) the insured has harvested farm-stored production and elects, in writing, to delay measurement of the farm-stored production and settlement of any potential associated claim for indemnity (Extensions will be granted for this purpose up to 180 days after the EOIP). This will not be considered a delayed claim for which the procedures in 3(b) are applicable.

(b) When an insured requests delayed measurement of his or her farm-stored production for up to 180 days after the EOIP, the following procedures will apply:

(i) If all or part of the landlord's and tenants' share of the crop is in the same farm-storage structure and if one of the entities requests 180-day delayed measurement of their farm-stored production, then the associated claims for the unit(s) of the tenant or landlord can be settled based on:

(A) Measurements of stored production on the date of final inspection if the insured does not elect the 180 delay in measurement;

(B) Measurements of stored production at the end of the 180-day period if the insured elects the 180 delay in measurement, or

(C) Sold production if sold prior to the end of the 180-day period.

Refer to item (iii) below.

(ii) The insured may submit a written request to delay measurement of his or her farm-stored production by unit, crop, or county basis. However, if an insured requests the 180-day delayed measurement for all units of a crop having farm-stored production or for all units of all crops insured in the county that has farm-stored production, then all of the associated claim units must be held open up to 180 days after the EOIP. When multiple units are stored in a single structure with different EOIPs, the latest EOIP date that applies to the stored crop will be used to determine the 180-day time period.

C. Delayed Claim (continued)

(iii) If an election to delay measurement of the farm-stored production is in effect and the insured:

(A) Sells all of the production prior to the end of the 180-day period, the adjuster will use the settlement sheets from the buyer to settle the claim. However, any applicable quality determinations will be as described in item (iv) below.

(B) Delivers the production to commercial storage prior to the end of the 180 day period, the adjuster will use the Commercial Storage Records provided to the insured to determine the amount of production in storage. However, any applicable quality determinations will be as described in item (iv) below.

(C) Sells only a portion of the production prior to the end of the 180-day period and the balance of the crop is still in the structure at the end of the 180-day period, the adjuster will determine the gross production from the settlement sheet for the sold production plus the adjuster's measurements of the crop left in the storage structure at the end of the 180-day period. Any applicable quality determinations will be as described in item (iv) below.

(D) Feeds some of the production that was in the farm storage structure prior to the end of the 180-day period and has acceptable feed records in accordance with paragraph 933, the adjuster will use those records, plus the calculated production based on the adjuster's measurements of any remaining stored production at the end of the 180-day period. If the total production for the unit cannot be established and verified as stated herein, the adjuster will handle in accordance with the procedures in Part 9 herein. Any applicable quality determinations will be as described in item (iv) below.

(E) Has acceptable weight tickets for the production in the on-farm-storage structure, in accordance with paragraph 1002, the adjuster will follow the procedures in paragraph 1002 to determine at the end of the 180-day period whether the weight tickets or the production determined from the adjuster-measured production will be used. Any applicable quality determinations will be as described in item (iv) below.

(iv) All samples of farm stored production used to determine insurable quality deficiencies must be obtained in accordance with the QA SP statement, but not later than 60 days after the EOIP. Damage that occurs after the EOIP is not covered; e.g., quality or additional quality damage occurring while in storage.

C. Delayed Claim (continued)

(A) Samples to determine all substances or conditions injurious to human or animal health must be obtained prior to production going into storage except for Vomitoxin; otherwise, no quality adjustment will be allowed for such deficiencies (refer to paragraph 1109 for more information).

(B) The AIP will use the quality deficiencies and levels of quality deficiencies determined on the initial inspection (for example, test weight, kernel damage, or Vomitoxin) to settle the claim, unless prior to 60 days after the calendar date for the EOIP, the production is: (1) delivered to a buyer or (2) put in commercial storage. If the production is delivered to a buyer or put into commercial storage prior to 60 days after the calendar date for the EOIP, the quality deficiencies determined by a licensed grain grader from the samples taken at time of the delivery can be used, EXCEPT for Aflatoxin or other mycotoxin that must be determined prior to storage, as stated in paragraph 1109.

Caution: Only Aflatoxin levels determined from samples taken prior to on-farm storage can be used to settle a claim. Copies of grade sheets must be retained in the insured's loss file.

(v) If the insured has a 180-day delayed measurement request in effect, the insured may request that the AIP settle the claim at any time prior to the end of the 180-day period. When the insured makes the request to settle the claim prior to 180 days after the EOIP, the AIP will settle the claim as soon as possible after the date the insured made this request. The insured's signature on the PW will indicate the insured's intent to settle prior to the end of the 180-day period.

(vi) For APH based policies: If the 180-day measurement delay continues beyond the date the insured is required to submit his/her production report, the insured will be assigned the previous year's approved yield as a temporary yield in accordance with applicable CIH procedures.

(vii) The 180-day measurement delay does not extend any dates specified in the policy by which premiums, administrative fees, or other debts owed must be paid.

(viii) At the end of 180 days, the adjuster will measure the production as soon as possible so the claim can be completed and submitted (signed by the insured) no later than 30 days after the 180th day.

C. Delayed Claim (continued)

(4) The AIP will perform any necessary inspections, including completion of a Delayed Notice Report outlined in subparagraph D below (Delayed Notice Report is not required when a companion contract is involved. Refer to subparagraph C(10) below)

(5) Delayed claims can only be accepted when:

(a) The insured has received an extension from the AIP as explained in (9) below;

(b) Through no fault of the insured, the AIP was unable to complete the final claim within the required timeframe; or

(c) The AIP has granted an extension for a delayed notice. Refer to paragraph 402.

(6) The insured's failure to submit (sign) the final claim within the time specified in the policy provisions for the applicable plan of insurance, or to provide the required information will result in a mandatory denial of the claim, unless:

(a) The insured requested and the AIP granted an extension to submit (sign) a claim. AIPs can only grant extensions if the amount of the loss cannot be determined within such time period because the information needed to determine the amount of the loss was not available.

(b) The insured acquired all information necessary to complete and sign their claim within the required timeframe, but through no fault of the insured, the AIP was unable to complete and obtain the insured's (or authorized representative's) signature on the PW within that time frame. This would be when circumstances beyond the AIP's control prevent the AIP from completing and obtaining the insured's signature on the PW by the required time frame; e.g., unusually large numbers of loss adjustment inspections due all at the same time. When such circumstances arise, RMA expects AIPs to handle all losses as expeditiously as possible while still staying within the confines of FCIC-issued policy provisions and procedures. The AIP must document on the PW or on a Special Report the reason they were unable to complete and obtain the insured's (or authorized representative's) signature on the PW within the required time frame.

(7) For an inspection involving a delayed claim, the adjuster does not have the authority to bind the AIP to any particular course of action. If this inspection is not authorized under (5)(a) and (b) above, do not make statements to the insured which could be construed as admitting or denying liability. The adjuster will inform the insured of the following:

(a) The adjuster's responsibility is limited to establishing the facts and assisting in the preparation of the delayed NOL or delayed claim for consideration by the AIP.

C. Delayed Claim (continued)

(b) The AIP will inform the insured in writing of the approval or rejection of the claim.

(8) For all claims involving accepted delayed notices, the adjuster will:

(a) Follow the loss adjustment procedures for making appraisals, acreage determinations, AR information verifications, uninsured causes, etc.

(b) Complete all PW entries for which the determination can satisfactorily be made, but will not sign the claim. If there is any determination that cannot be satisfactorily determined, do not make an entry on the PW for that information. Document it as indicated in subparagraph D below.

(9) For all claims involving the AIP granting an extension to submit the claim later than the time specified in the policy provisions for submitting claims (Delayed Claims - No Delayed NOL Involved), the adjuster will:

(a) Make a preliminary inspection and make all determinations possible and complete the PW without the production records or settlement price information.

(b) Enter "Certification Form – Delayed Claim Extension" in the heading of the PW or note in the Narrative that a Certification Form-Delayed Claim Extension was used.

(c) Obtain the insured's signature and date.

(d) Not sign or date the PW during the initial inspection.

(e) Complete a Certification Form and notate in the remarks "AIP approved Delayed Claim Extension." Refer to exhibit 7.

(f) Instruct the insured to do the following when the production records or settlement price(s) are available:

(i) Enter "Production Records Available" or "Settlement Price Available" in the remarks section of the Certification Form;

(ii) Sign and date the Certification Form; and

(iii) Return it to the person/location indicated on the Certification Form or as instructed by the AIP.

(g) Upon receipt of the completed Certification Form; sign, date, and mark the Certification Form indicating a farm visit is required to obtain the production records (or settlement price, if applicable) and for completion of the claim.

C. Delayed Claim (continued)

(h) For this type of delayed claim, the AIP will file the insured's request and AIP's approval for an extension of a final claim in the insured's file. The Certification Form is the only documentation required; the instructions in the following subparagraphs will not apply unless the claim involves a delayed NOL.

(10) If a claim involves an acceptable delayed notice (refer to paragraph 402) and the AIP has also extended the time for submitting claims, with the exception of claims involving companion contracts as stated in paragraph 402, the Delayed Notice Report in D below must be completed by the adjuster, and the claim cannot be paid unless it meets the approval criteria in paragraph 402(B).

D. Delayed Notice Report

The adjuster must document on a Special Report whether or not information necessary to accurately determine the amount of loss is available by addressing the items listed below, and any other pertinent information. Attach the completed Special Report to the PW and forward to your AIP. For delayed notices involving PP claims, adapt this report to address whether all the information necessary to verify whether the crop was prevented due to an insured cause still exists. The report for planted acres will document the following:

(1) The number of acres of the insured crop, by unit, practice, and type that had been plowed, pastured, or otherwise used after the time the insured was required to give NOL under policy provisions.

(2) Whether all acreage could be accurately identified and whether such acreage was measured or estimated.

(3) How the actual production was determined, including information as to whether the records of anyone buying production from the insured were examined.

(4) The COL and how it was possible to establish that all of the loss occurred within the insurance period.

(5) How appraisals of UH, mature production were determined.

(6) Whether any uninsured causes contributed to the loss, and if so, the methods used in making per-acre appraisals for such causes. (Refer to paragraph 1221.)

(7) How production on the unit compared with that of other farms in the community; include a statement as to whether other insureds or producers on nearby farms incurred similar losses.

(8) If the insured's reason for delay was inability to harvest timely because of unfavorable weather during the normal harvest period, include the following information:

D. Delayed Notice Report (continued)

(a) The date when the insured started harvesting this crop, and the date harvest was started on this unit.

(b) To what extent neighboring farmers (both insured and uninsured) were able to complete harvest by the calendar date for the EOIP specified in the crop policy or endorsement.

(c) Whether the insured owns harvesting equipment and if it was adequate to complete harvest timely under normal conditions. Whether the insured performed custom work in lieu of timely harvesting his/her insured crop.

(d) If the insured does not own adequate equipment, document whether:

(i) There were firm, advance custom arrangements, assuring prompt harvest of the crop upon maturity,

(ii) The insured deferred making arrangements until harvest time, or

(iii) The insured depended upon equipment that would not be available until the custom operator completed his/her own harvest or that of other farmers.

(e) With readily available equipment and other necessary facilities, the earliest date harvest could have been completed under the weather and soil conditions that existed.

E. AIP Approval/Rejection of a Delayed NOL

Generally, the amount of loss cannot be accurately determined if the insured failed to give the AIP the opportunity to examine the UH crop potential or the harvested crop residue. Therefore, usually a claim will be rejected if the crop and crop residue have been removed from the fields prior to loss adjustment inspection. However, if such a claim is approved, it will require extensive documentation to support satisfactory determinations of planting practices, production, etc.

(1) The AIP's approving official will:

(a) Approve only claims for which the adjuster was able to satisfactorily establish all of the data needed to properly adjust the claim; and

(b) Reject claims for which the adjuster was not able to satisfactorily establish all of the data needed to properly adjust the claim.

(2) Provide written notification to the insured of approval or rejection of the claim.

When there is a probable loss situation for a crop, only adjusters are allowed to measure existing production in a single storage structure when an insured is going to add production from another unit, crop year, or production harvested from acreage which has been identified as uninsurable and such production will not be weighed before placing in the storage structure. Refer to paragraph 1002.

Note: The AIP may authorize the insured to mark the storage structure when the AIP cannot make a timely inspection. Refer to paragraph 1003.

A. Measurements from FSA

Insureds are not to request or be told to request FSA measurements of production in a storage structure for the purpose of a crop insurance claim(s). However, if FSA has already made recent measurements for the purpose of a FSA program and such measurements meet the qualifications as stated above for keeping production separate, the FSA measurements for each unit, crop year, and/or production from uninsurable acreage stored in the same structure may be used, unless:

(1) The AIP has supportable reasons to believe the measurements are incorrect (or moisture determinations made at the time of measurement were incorrect);

(2) The paperwork upon which the measurements are recorded does not contain all of the following:

(a) Insured's name,
(b) For each structure measured:

(i) Date of each measurement that shows that the measurements were done just prior to production being added to the existing production from another unit, crop year, or uninsured acreage or vice versa;

(ii) Dimensions of the structure and depth of production in each structure for: (1) preceding crop year's production (if applicable) with crop year(s) identified, (2) each unit for current crop year with crop year identified (if unit number is not shown, the field(s) the production was from, production from uninsured acreage (if applicable), and (3) measurements of space displaced by chutes, vents, etc.; and

(iii) Location of the structure with some type of alpha/numeric or other type identifier for each structure.

B. Pre-Measurement Service by the AIP

Prior to placing additional production in a storage structure, the insured will notify his/her AIP that measurements are needed. The AIP will immediately forward this information on to the appropriate personnel who sets up the adjuster assignments so that the insured can be contacted for an appointment or as otherwise described in paragraph 1003.

B. Pre-Measurement Service by the AIP (continued)

The Pre-Measurement Service will be recorded on a PW or other form used for this purpose. At least the following information must be recorded when performing a Pre-Measurement Service Inspection:

(1) Insured's Name (as shown on the most recent Policy Confirmation).

(2) Policy Number from the Policy Confirmation.

(3) County and State if it cannot be identified within the policy number.

(4) Unit Number.

(5) Crop year in which the production pre-measurement service is conducted.

(6) Specific location identifier of the storage structures being measured.

(7) Date the insured requested the production pre-measurement service. This date can be considered as a NOL for follow-up purposes.

(8) Measurement of each structure being measured and depth of production in each structure, and if applicable, measurements of space displaced by chutes, vents, etc. Use separate line entries to identify each structure and varying share(s).

(9) If measurement is for corn, indicate whether the corn is shelled, ear, silage, etc.

(10) Indicate, by structure, from what crop year the production was harvested.

(11) Sketch map showing structure design of the storage facility(s). Identify each structure with a numeric or alpha designation. Correlate the numeric/alpha identification of each structure with the line entry for the measurement or calculation of each structure.

(12) Distribution of AIP's Pre-Measurement Documents is, as follows:

(a) Copy to insured, and
(b) Original to the office that the AIP has designated to maintain insured's files of original documents.

704-720 (Reserved)

721 Replanted Crop

A. Practical to Replant

This section applies to CP that have replanting provisions regardless of whether they include replanting payment provisions.

Section 9 in the BP provides that when the crop is damaged and it is practical to replant, (annual crops only) the crop must be replanted in order to maintain insurability. Therefore, damaged acreage must not be released for other use until it is no longer practical to replant.

(1) As stated in the definition of Practical to Replant in the BP, refer to CP or SP for additional conditions that may exist for it to be considered practical to replant. Refer to the examples below.

Note: If irrigation water is only available from non-traditional sources and cost is excessive, replanting may not be practical.

Example 1: Some CP, for which processor or seed contracts apply, contain language stating that it is not practical to replant if the production from the replanted acreage cannot be delivered under the terms of the contract or the processor/seed contractor does not agree in writing to accept the production from the replanted acreage. Some CP for which processor contracts apply, state it is not practical to replant if the replanted acreage cannot produce at least the specified percentage of the approved yield and the processor agrees in writing to accept the production from the replanted acreage (e.g., processing sweet corn, processing beans, processing tomatoes, and green peas).

Example 2: The Sugar Beet CP state it will not be considered practical to replant 30 days after the initial planting date for all counties where an LPP is not applicable unless replanting is generally occurring in the area.

(2) If the AIP determines it is practical to replant any acreage, the acreage cannot be released to go to another crop. If the insured does not replant or plants another crop; the AIP:

(a) Will not pay an indemnity on such acreage; and
(b) Will revise the AR to designate such acreage as uninsurable.

(3) AIPs must be cautious to not prematurely determine that it is not practical to replant, especially in situations where there is a lighter stand, dry soil conditions, and the possibility that precipitation may occur or there is sufficient time to produce a crop before the calendar date for the EOIP.

(4) Insured notifies AIP of intent to replant, but the AIP determines it is not practical to replant:

A. Practical to Replant (continued)

(a) During the farm visit, appraise the acreage. Inform the insured that it is not practical to replant the original crop, but the AIP will release the acreage for another use if the insured desires. If the insured elects to plant the same insured crop (under any practice) within or prior to the late planting period or after the final planting date if no late planting period is applicable, unless otherwise specified in the SP, the crop will be considered an insured replanted crop and no replanting payment, if applicable, will be paid. Any indemnity will be based on the greater of the:

(i) AIP's appraised production on the initially planted crop;
(ii) AIP's subsequent appraisal of the replanted crop, if not harvested; or
(iii) harvested production from the replanted crop.

(b) If the entire unit acreage is damaged, the claim can be finalized after the insured certifies that the entire unit acreage was put to another use or a second crop. If the entire unit is released to go to another use or a second crop, a Certification Form should be left with the insured, refer to paragraph 831. Insurability of the second crop is determined in accordance with the applicable policy provisions and as outlined in paragraph 601.

(c) AIPs must document all sources of information used to make the determination that it was not practical to replant. This documentation must be retained in the insured's file folder.

(5) When an herbicide has been properly applied as a recommended farming practice, and the label restrictions prohibit replanting the crop by the FPD, it will generally be considered not practical to replant the acreage. The individual circumstances should be documented using label restrictions and local CES information to make individual determinations.

(a) Advise the insureds that to protect their interest in determining it is not practical to replant they must notify the AIP of the circumstances in order to provide timely documentation of the facts.

(b) No standard response can be given as to the practicality to replant in this situation. Every case may have varied conditions that will affect the decision. Included in these conditions are the following:

(i) Label restrictions for herbicide used;
(ii) Crop variety;
(iii) Planting date;
(iv) Soil, moisture, and temperature conditions; and
(v) Stage of plant growth.

B. Spring Wheat Replanted in Counties Having Only Fall Planting Dates

If the insured's planted winter wheat is damaged to the point there is a loss situation and the insured wishes to plant the winter wheat acreage to a spring variety, the claim will be finalized based on the AIP's appraisal of the winter wheat crop. The spring-planted variety would not be considered replanted to the first crop (wheat). It would be considered an uninsurable second crop since spring wheat is not insurable in these counties. However, if the insured inter-seeds the spring variety into the existing winter variety, do not finalize the claim. The winter wheat will continue to be insured. Refer to subparagraph E below.

C. Replanted Without Notifying AIP of Intent to Replant or Replants without Consent

(1) Insureds must provide all notices required under the policy provisions. This includes notices when the insured wants to destroy any acreage of an initially planted crop and replant it. Section 14 of the BP require these notices. The AIP must provide consent in advance of replanting.

(2) Exceptions may not be made even when the original stand remained intact because the insured inter-seeded, replanted alongside the original damaged rows, or left RSAs at the insured's discretion. When the insured crop is destroyed without consent, the CP provide for an amount of PTC that is not less than the production guarantee. When an insured crop is destroyed without consent and then replanted, no replanting payment can be made (if replant payment provisions are applicable to the crop) and no indemnity payment associated with the acreage initially planted can be made.

(3) Additional policy provisions provide guidance regarding replanting, determination of the first insured crop, the second crop and crops which may be planted subsequent to a second crop. A first insured crop includes acreage that is replanted when replanting is practical.

(4) For any acreage where NOL was not given prior to the insured destroying any portion of the remaining stand and then replanting it, and the AIP determines replanting:

(a) Was not practical (for example, conditions were such that there was not adequate moisture, there was no marketing window, the condition of the field was not appropriate, etc.), no replant payment will be paid (if replant payment provisions applicable to the crop), and not less than the production GPA will be included as PTC. The subsequent planting will be the appropriate subsequent crop; e.g., second crop. Insurability of the second crop is determined in accordance with applicable policy provisions.

(b) Was practical and the insured crop was replanted, insurance may be provided for the replanted crop. However, no replant payment can be made (if replant payment provisions applicable to the crop) in this instance, and the AIP will apply uninsured COL appraisals for any reduction in yield that may have occurred due to replanting after the FPD.

D. Planting Other Acreage in Lieu of Replanting the Acreage Initially Planted

(1) Susceptibility to plant disease, susceptibility to damage due to soil borne insects or herbicides, blowing ground, or other soil conditions may make it impractical to replant on the initially-planted acreage. The insured is not allowed to receive a replanting payment on other acreage planted to replace the initially-planted and subsequently destroyed acreage. Any such "replacement" acreage is treated as any other initially-planted acreage.

(2) If it is not practical to replant the crop on the initially-planted acreage, the insured must elect whether to carry the crop to harvest or receive consent for other use. Follow all instructions for the appropriate preliminary or final inspections as outlined in the LASHs.

E. Replanting on Interplanted Acreage

(1) There is no specification in the endorsement/policy as to how a crop is to be replanted. However, if a replanting method contributes to any subsequent loss of production, such loss must be reflected in an appraisal for production lost due to uninsured causes.

(2) An existing stand does not have to be destroyed prior to replanting in order to qualify for a replanting payment as long as the acreage being replanted meets the minimum requirements in the policy/endorsement.

If the insured chooses to interplant a spring variety with a winter variety, for example, the insured's inability to market or loss of value of the production because of the mixed classes is not an insured COL. If subsequent damage occurs which lowers the quality of the crop due to insurable causes, a determination of the value of the grain without consideration of its mixed status must be made to determine the extent of any QA.

(3) The actual cost of replanting must be considered when making the replant payment if the CP for the particular crop specify that the replant payment cannot exceed the actual cost of replanting. In cases of interplanting for such crops, it is even more important to ascertain the actual cost of the replant operation to ensure that the replant payment claimed does not exceed this cost.

F. Replanted During the Late Planting Period Due to an Uninsured Cause

(1) If the insured crop is replanted during the LPP due to the crop being destroyed by an uninsured cause (e.g., chemical damage), it will not be considered to be late planted and no reduction in the guarantee will apply. The replanted crop will be handled as any other replanted crop (i.e., the AIP's consent is required before the insured can replant as stated in C(1) above, the earliest planting date, initial planting practice, applies, etc.), except the insured is not eligible for a replanting payment on such acreage, if it is a crop that has replanting payment provisions.

F. Replanted During the Late Planting Period Due to an Uninsured Cause (continued)

(2) During final loss adjustment of a unit containing acreage identified in (1), determine if there is any reduction of yield that can be directly attributed to replanting the crop acreage in the LPP by comparing the yields of the replanted acreage to the yields of timely planted acreage of the same crop in the surrounding area. If such acreage did not suffer any loss of yield due to an insured cause, show the per-acre amount of reduced yield as an uninsured cause appraisal.

G. Inability to Replant

No potential production will be assessed to acreage the insured has destroyed with consent to replant if, due to weather and/or soil conditions, the insured is unable to replant. However, if it is determined that the insured could have replanted within the timeframe that it was still practical, prepare a revised AR designating the acreage as uninsurable (refer to the CIH for revised AR instructions).

722 Replanting Payment Determinations

A. On-the-Farm Replant Inspection

(1) The AIP, upon receiving the NOL, will assign the claim as a Preliminary Inspection. The adjuster will determine at the time of inspection if it is a Final Inspection.

(2) The adjuster upon field inspection will determine if the unit qualifies for a replanting payment based on the provisions of the individual crop policy or endorsement.

(3) Refer to individual crop LASHs for completion instructions for preliminary and final replant claims.

(4) Decisions regarding whether or not the unit qualifies for a replanting payment will be made on the basis that:

(a) Crop acreage initially planted before the earliest planting date specified in the SP for the applicable crop and county is not eligible for a replanting payment. However, if acreage is replanted on or after the earliest planting date, and then this acreage is replanted a second time, the acreage replanted a second time may be eligible for a replanting payment.

(b) The damaged acreage to be replanted must be at least the lesser of 20 acres or 20 percent of the insured planted acreage for the unit as determined on the FPD or within the LPP if an LPP is applicable. (This is not applicable to forage seeding.)

(i) Acreage planted after the FPD for crops not having an LPP or after the LPP for crops having LPPs, will not be considered in determining the 20 acres or 20 percent requirement to qualify for a replanting payment.

A. On-the-Farm Replant Inspection (continued)

(ii) For EU, MCEU, and WFUs, the 20 acres or 20 percent requirement applies to the total acreage for the damaged crop (e.g., corn) in the unit.

(c) A previous replanting payment must not have been made on the same acreage for the same crop year.

(d) To qualify for a replanting payment, the appraised potential production cannot exceed the amount stated in the crop policy. Refer to the individual CP for specific amount. If crop damage is due to hail, blowing sandy soils, frost, or freeze, the appraisal must be deferred as stated in subparagraph 921B.

Note: Once the 20 acres or 20 percent requirement is met for the unit, a replanting payment may be made on any acreage eligible for a replanting payment within the unit.

Example 1: Insured planted acreage for the unit was 100 acres, all planted after the earliest planting date. The first replant notice includes 31 acres determined practical to replant that qualified and received a replanting payment. A second replant notice was filed at a later date for an additional 19 acres that were determined practical to replant (not part of the 31 acres that already received a replanting payment). Since the unit already qualified for a replanting payment, the additional 19 acres are not subject to the 20 acres or 20 percent requirement.

Example 2: Insured planted acreage for the unit was 100 acres, all planted after the earliest planting date. The first replant notice includes 19 acres determined practical to replant that did not qualify for a replanting payment. A second replant notice was filed at a later date on an additional 31 acres that were practical to replant. Since the combined acres (19 ac. + 31 ac.) meet the 20 acres or 20 percent requirement, a replanting payment may be made on all 50 replanted acres.

Example 3: Insured planted acreage for the unit was 100 acres; 81 acres planted before the earliest planting date (not eligible for a replanting payment) and 19 acres planted after the earliest planting date (eligible for a replanting payment). The replant notice includes 50 acres in the unit (40 acres initially planted before the earliest planting date; 10 acres planted after the earliest planting date). The insured replanted all 50 acres determined practical to replant. The insured may receive a replanting payment on the 10 eligible acres since the 50 replanted acres meet the 20 acres or 20 percent requirement.

A. On-the-Farm Replant Inspection (continued)

(5) Replanting payments do not apply to crops insured under the Small Grains CP that have been initially planted to a winter type of the insured crop (including rye) in any county for which the SP has only a fall FPD (including FPDs in December, January, and February.)

(6) If a replanting payment determination for the unit:

(i) cannot be made because additional insured acreage on the unit is to be planted and the minimum may not be met, consent to replant may be given, but the replant claim is to be handled as a preliminary replant inspection as instructed in the applicable crop LASH;

(ii) did not qualify the unit for a replanting payment, but later has a routine final claim filed, the original preliminary inspection entries must be reviewed and corrected as necessary; or

(iii) qualifies the unit for a replanting payment, the replant notice will be changed from a preliminary notice to a final notice (final replant claim) utilizing a Certification Form (exhibit 7).

(7) A Certification Form cannot be accepted until the entire unit has been initially planted. The adjuster must have the completed Certification Form (by personal contact or otherwise) prior to signing the PW.

(8) Certification Form spot-checks should be conducted regularly. The AIP will determine the number of reviews to be conducted. Any questionable Certification Form must be reviewed.

(9) An AR must be submitted with the final replant claim, if not previously submitted. If the AR is revised after submission of a final replant claim, a corrected claim must be submitted with the revised AR.

(10) Replanting payments will be based on the insured's actual cost per acre not to exceed the amount specified by the CP or SP, unless otherwise specified in the CP or SP.

(11) If the insured replants the acreage to a different planting practice, the crop will continue to be insured under the practice originally planted and reported even when the crop is replanted by a practice that was uninsurable as an original planting. This is not applicable to such practices as IRR, NIRR, staked tomatoes, ground tomatoes, etc.; they are considered production practices rather than planting practices. This is also not applicable to skip-row planting patterns for cotton, corn, or grain sorghum. If the insured files a claim for indemnity, the practice originally reported will be entered in the appropriate column for practice on the PW, and the replanted practice will be documented in the Narrative.

A. On-the-Farm Replant Inspection (continued)

(12) Replanting to a different practice, type, or variety is not planting to another crop, unless the AD distinguish the type or variety as a different crop.

(13) Some CPs have a liability limitation when the crop is replanted by a practice that was uninsurable as an original planting. Specific claim preparation instructions will be found in the applicable LASHs.

(14) If the crop is replanted to a different type than initially planted, the AR must be revised to reflect the new type and amount of acres replanted. Replanting payments will be based on the new type replanted, unless otherwise specified in the CP or SP.

(15) Replanting payments will be calculated using the price election and production guarantee for the crop type that is replanted and insured, unless otherwise specified in the CP or SP.

Example: The Small Grains CP indicates a replanting payment will be based on the guarantee and projected price for the crop type initially planted when: (1) A damaged winter crop type is replanted to a spring crop type, and retains insurance based on the winter crop type guarantee and projected price, and (2) Acreage replanted at a reduced seeding rate into a partially damaged stand of the insured crop.

(16) When acreage being claimed for a replanting payment was initially timely planted (on or after the earliest planting date (if applicable) and before the FPD) and then is replanted during the LPP, the timely-planted guarantee will apply to the replanted acreage and will be used to determine the replanting payment. If the acreage being claimed for a replanting payment was initially planted in the LPP, then the initial LP guarantee would be used to determine the replanting payment.

(17) Replanting payments are not to be used to offset amounts due (i.e., premium, interest, or overpayments), unless the insured agrees to this in writing.

Note: Until such a time the stage codes are updated in the individual LASHs, use the stage code (RN – Acreage replanted and not qualified for a replanting payment) on the PW when applicable.

B. Self-Certification Replant Inspections

At the discretion of the AIP, the self-certification replant inspection may be used for certain crops with 50 gross acres (before considering share) per unit or less to be replanted. The self-certification replant program provides an insured with consent to replant and allows the AIP to complete replanting payment claims without an on-the-farm replant inspection. If there is any reason to suspect that the insured will misrepresent information regarding the replanting claim, an on-the-farm replant inspection must be conducted.

(1) If authorized by the AIP, the self-certification replant inspection can be used on the following crops provided replanted acreage will be 50 gross acres (before share) or less on a unit and the unit acreage qualifies for a replanting payment in accordance with policy/endorsement replanting provisions. Authorized crops: barley and wheat not covered by the Winter Coverage Endorsement (both initially planted winter and spring crops), buckwheat, canola and rapeseed, corn, dry beans, flax (spring-seeded only), grain sorghum, mustard, oats (spring-seeded only), popcorn (including popcorn revenue), peanuts, rice, safflowers, soybeans, sugar beets, and sunflower seed.

(2) No provisions of the contract are waived. As outlined below, the Self-Certification Replant Worksheet (exhibit 8) will be used in lieu of the on-the-farm visit and in place of the Certification Form. The approved Self-Certification Replant Worksheet constitutes the AIP's determination that all replanting payment requirements are considered to have been met.

(3) To claim a replanting payment, the insured must give the NOL to his/her AIP prior to obtaining consent to replant without an inspection. The AIP upon receiving the NOL will prepare the PW as a preliminary notice.

(4) Prior to mailing the Self-Certification Replant Worksheet to the insured, the adjuster will:

(a) Contact the insured to determine if the insured's damaged acreage to be replanted is 50 gross acres or less per unit and if the unit acreage will qualify for a replanting payment.

(i) Unit replanting acreage qualifications are based on the same qualifications as in subparagraph B(4)(a)-(c) above.

(ii) If this determination cannot be made because additional insured acreage on the unit is to be planted and the minimum may not be met, consent to replant may be given, but handle as a preliminary replant inspection with an on-the-farm visit.

(iii) Refer to subparagraph B(8) and (10) above if the unit does not qualify for a replanting payment at this time.

B. Self-Certification Replant Inspections (continued)

(iv) The insured's estimated yield per acre will be used to determine whether the potential production for the damaged acreage will not exceed the amount stated in the applicable policy. This amount will be entered in item 19 of the worksheet.

(v) The AIP must inform the insured to defer estimating the yield per acre if damage is due to hail, blowing sandy soils, frost or freeze, for the length of time stated in subparagraph 921B. The AIPs must not approve release of acreage to replant until this time has elapsed. When the insured completes and signs the worksheet, he/she has certified the estimated yield per acre was deferred for the applicable timeframe, as stated in subparagraph 921B.

(b) Complete as many items as possible from information obtained from the insured's file folder information and/or from the insured. Circle the uncompleted items that are to be completed by the insured. Completion instructions are included in exhibit 8.

(5) A Self-Certification Replant Worksheet is then mailed to the insured when AIP consent is given to replant. A form letter provided by the AIP, which highlights the insured's requirements, will be attached to the worksheet.

(6) The AIP will advise the insured:

(a) To review the Self-Certification Replant Worksheet items completed by the adjuster, line through any incorrect information, insert the correct information, and initial any changes;

(b) To complete the circled uncompleted items on the worksheet (upon replanting the acreage), sign and date, and immediately return the completed worksheet to the person/office instructed by the AIP;

(c) To submit a copy of receipts to verify the crop was replanted and to support the actual replanting costs, if required by the CP;

(d) That further notification is required if additional acreage will need to be replanted;

(e) An adjuster must make an on-the-farm inspection and appraisal any time the total (cumulative) replanting payment acreage will exceed 50 gross acres for a unit;

(f) That the acreage replanted in excess of 50 gross acres for a unit without the adjuster making an on-the-farm inspection and crop appraisal, will not be eligible for a replanting payment;

B. Self-Certification Replant Inspections (continued)

(g) That a random review may be conducted on self-certification replants;

(h) That the replant payment cannot be processed until all acreage for the unit has been planted, and the insured reports the unit acreage to the agent; and

(i) That it is the insured's responsibility to report all other acreage planted for all insured crops to the agent prior to the ARD for the crop and county.

(7) A Self-Certification Replant Worksheet cannot be approved until the entire unit has been initially planted.

(8) The adjuster (or other authorized employee) will review the insured's completed worksheet and attached receipts, if required, to verify eligibility for a replanting payment in accordance with policy/endorsement provisions (refer to subparagraph B(4) above and B(7)-(8) and any procedural restrictions for self-certification before signing and dating the completed worksheet).

(9) For the applicable replanted unit(s), the AIP will compare the reported information on the AR against the replant worksheet.

(a) If there is a discrepancy which would result in a lower premium when the replant claim is processed, contact the insured to clear up the discrepancy, or make an on-the-farm visit to determine the correct information. If it is before the ARD, the AR can be revised by the insured without the AIP's approval.

(b) If the unit liability is reduced as a result of the information on the replant worksheet, the liability determined at the time of final loss will be held to the liability reported for the replant claim. Any production from any under reported and/or unreported acreage will count against the guarantee.

(10) If an initial AR has not been previously submitted and processed by the AIP, it must be submitted and processed before the replant claim can be processed.

(11) If the AR has not been received by the agent by the ARD, but the Self-Certification Replant Worksheet was received prior to that date; the acreage on the replant worksheet will be considered the timely reported acres for the crop. Contact the insured and perform a field inspection.

(a) Determine all insured and uninsured acreage for the unit(s) for which a replant payment has been claimed and prepare an AR accordingly.

(b) Any insurable acreage not reported on the replant worksheet at this time is considered late filed and will require a crop inspection to determine if such acreage will be accepted or rejected, as outlined in paragraph 733.

B. Self-Certification Replant Inspections (continued)

If crop(s) other than the crop reported on the worksheet has not been reported by the final ARD, the AIP will determine whether the inspection will include determinations for a late-filed AR for the unreported crop(s). For example, the acreage reported on the Self-Certification Replant Worksheet was for soybeans; however, the insured has a policy for corn and grain sorghum but failed to timely report the acres for these two crops.

(12) If the AR is revised after submission of a replanting payment (final) claim, a corrected claim must be submitted with the revised AR if it affects the replant unit.

(13) After confirming that the insured acreage for the unit is eligible for a replanting payment, and any discrepancy on the AR and replant worksheet have been resolved:

(a) Change the notice from a Preliminary to a Final Replant Claim.

(b) Transfer the information from the worksheet to the PW in accordance with completion instructions in the LASH for replanting payments, with the exception of obtaining the insured's signature. Enter "See attached" on the line for the insured's signature and enter the same date the insured signed the worksheet.

(c) Attach the worksheet original and receipts to the AIP's copy of the PW.

(d) Attach a copy of the worksheet to the insured's copy of the PW.

(14) If there is any reason to suspect misrepresentation by the insured for this type of inspection, do not allow the insured to self-certify a replant claim. An actual field inspection must be completed in this situation.

C. Inspections for Crops Not Having Replanting Payment Provisions

Even though a crop or crop coverage may not be eligible for replanting payments, a majority of the crops still have replanting requirements, and the insured must provide NOL as described in preceding paragraphs.

(1) In all cases, the AIP representative, or other party responsible for recording notices, will record the NOL and forward the notice to the person or office designated by the AIP to assign losses to adjusters.

(2) The adjuster will contact the insured to determine the insured's intent for handling the damaged crop and to determine whether a field inspection is required. The insured will be informed that if a field inspection is not performed, the insured must be prepared to show original seed receipts/tickets and other supporting receipts/tickets to support that the crop was initially planted and replanted in case of an audit or final loss to this unit.

C. Inspections for Crops Not Having Replanting Payment Provisions (continued)

(3) Determinations that field inspections are not required, must be fully supported by information documented in the insured's loss claim file, based on contact with the insured or the insured's authorized representative. Notices of loss may not require a field inspection when the CP do not provide for replanting payments (or replant payments are not applicable because the policy has CAT coverage) for the crop and crop damage is consistent with other producers' crop damage in the area, and the other producers are replanting. Refer to (5) below.

(4) When the NOL is cleared without a field inspection, consent to replant will be considered given to the insured when the adjuster documents in the insured's claim file why a field inspection is not required and closes the NOL.

(5) A field inspection must be completed when:

(a) Policy provisions provide for replant payments (except self-certification replant inspections and policies with CAT coverage);

(b) An insured requests consent to put insured acreage to another use;

(c) There is reason to suspect the insured did not follow GFPs or uninsured causes of loss;

(d) Damage is inconsistent with other crops in the insured's area;

(e) There is any need to document actual field crop conditions; or

(f) It becomes evident (from contact with the insured or general crop conditions) that these insured crops have been damaged to the extent that replanting would be required, but the insured does not intend to replant the insured acreage. An inspection is required in order to determine practicability to replant and therefore insurability of the damaged acreage.

(6) No potential production will be assessed to acreage the insured has destroyed with consent to replant (with or without a field inspection if, due to weather and/or soil conditions, the insured is unable to replant). However, if the insured could have replanted within the timeframe that it was still practical, the acreage must be considered uninsured and the AR revised accordingly.

723-730 (Reserved)

Section 3 Special Contract Services

731 Growing Season Inspections

GSIs are done as a part of quality assurance and may be done in conjunction with a pre-harvest inspection (refer to paragraph 732).

Attach completed aerial photo documentation, GSI Report, appraisal worksheet, and photo and/or video documentation. Distribute originals to the office designated by the AIP to maintain insured's files of original documents and as otherwise instructed by the AIP.

(1) Complete the GSI using the following:

(a) GSI Report (Refer to exhibit 18);

(b) Aerial photocopy, including:

(i) Insured's name and contract number,
(ii) Insured's farm and the field(s) inspected,
(iii) Area in the field where the appraisals were taken,
(iv) Any problem areas within the field(s), and
(v) Any field(s) of the same crop that borders a neighbor's field and the condition of that neighbor's field.

(c) Appraisal Worksheet using the instructions in the applicable crop LASH for the crop being inspected.

Exception: If an inspection is being done shortly after the FPD to determine if the crop has been planted by the FPD and/or within the LPP (if applicable), appraisals are not expected for this early inspection. However, the adjuster must obtain and record as much information as possible when determining the applicable planting date.

(2) Refer to paragraph 202 for instructions on the use of photos or videos for documentation purposes.

732 Pre-harvest Inspections

Pre-harvest inspections are done as a quality assurance/control function to deter insureds from shifting or hiding production in order to create losses or create larger losses. It also serves to discover producers who are attempting to do this. By appraising all fields prior to harvest, the appraised production can be compared against the harvested production. If there are large discrepancies, it may be possible to use the appraisals to establish misrepresentation or as a key that further investigation is needed to establish the misrepresentation.

If it is determined an insured entity (including SBI) is or is affiliated with a broker, packer, or processor and a loss situation is probable or a NOL is filed, it is recommended the AIP complete a pre-harvest inspection. Complete the pre-harvest inspection as follows:

(1) Do appraisals on all units of the crop.

(2) Record the inspection on a PW and appropriate appraisal worksheets using the same instructions as for a preliminary inspection. Final claims can also be prepared during this inspection, if appropriate, by using the instructions for final claims in this handbook and appropriate LASH. Prepare one PW for each unit.

(3) Identify somewhere in the heading of the PW that this is a pre-harvest inspection, unless the unit is going to be finalized on this visit. Document any pertinent information in the Narrative of the PW or on a Special Report.

(4) For any loss units submitted for payment, the PTC from harvested acreage will be compared against the pre-harvest appraisals. When there are significant discrepancies, the AIP will try to resolve these discrepancies with the insured. If these discrepancies cannot be resolved, AIPs may forward such cases to the appropriate FCIC Compliance Office for further review, action, or assistance.

733 Crop Inspection to Determine Acceptance of Misreported Acreage Report Information

(1) This inspection can be initiated when the:

(a) Insured files a late-filed application and/or AR or wishes to add acreage that the insured had a share in at the time insurance attached but was initially not reported on the timely filed AR for the crop(s); or

(b) AIP discovers that acreage in which the insured had an insurable share at the time insurance attached was under-reported, a unit(s) was not reported, or no acreage was reported by the insured or for the crop. Refer to the CIH.

(2) Acreage for which the insured did not have a share until after the time insurance would have attached cannot be insured under the insured's policy, unless specified otherwise in the BP, CP, or SP.

(3) The crop inspection will consist of an on-the-farm visit to determine the number of planted acres, to perform crop appraisals, and make observations of the current general crop, soil, and weather conditions to determine if the planted crop acreage for the unit will produce at least ninety percent (90%) of the yield upon which the per-acre guarantee or per-acre amount of insurance is based.

(4) Refer to the Florida Citrus Fruit LASH (FCIC-25140) for specific instructions for crop inspections to accept or reject a revised AR to change the number of trees or other acreage information initially reported on the AR. The liability for this crop is based on the number of insurable trees rather than insurable acres.

(5) If no COL that could potentially create a loss situation has occurred (i.e., excess precipitation may have occurred but it did not create or has the potential to create a loss situation) and the unit appraisal meets the appraisal requirements for accepting the unreported acreage or MI:

The approving official may accept or reject, by unit, at his/her discretion (based upon crop, soil, weather conditions, etc.) the unreported acreage when appraisals indicate that the crop acreage for the unit would produce at least ninety percent (90%) of the yield upon which the per-acre guarantee or per-acre amount of insurance is based. Unit acreage appraising below ninety percent (90%) of the yield will be rejected. The unit acreage for the purpose of crop-inspection appraisals includes the reported acreage and unreported insurable acreage. Refer to exception in items (7) and (8) below.

Example: If the reported acreage for unit 0001-0001BU was 90.0 acres but a field consisting of 80.0 insurable acres was omitted from this unit, the appraisal would be conducted for all 170.0 acres to determine if the unit acreage appraised at least ninety percent (90%) of the yield upon which the per-acre guarantee or per-acre amount of insurance was based. For unreported units, the individual unit acreage is comprised of all the acreage that could have been insured under the particular unreported unit. However, when there are unreported units involved, all units of the crop must be appraised until one unit fails or all units pass the criteria for accepting an unreported unit; refer to item (7) below.

(6) When there are insured shareholders involved, approval/rejection determinations are made independently of one another based on each policyholder's individual yield upon which their individual per-acre guarantee or per-acre DO is based (e.g., approved APH yield) and whether the corresponding appraisal of each policyholder was at least ninety percent (90%) of their individual yield upon which their individual per-acre guarantee or per-acre amount of insurance is based. Therefore, it may be possible, if the insured shareholders have different APHs or different amounts of insurance, for one policyholder to meet the approval criteria and for one not to meet the criteria for approval.

(7) Unreported units cannot be added if any reported insured unit for the crop at this time will not produce at least ninety percent (90%) of the yield upon which the per-acre guarantee or per-acre amount of insurance is based. When unreported units are rejected, the unreported unit procedure in paragraph 1234 must be followed.

(8) Insured did not timely submit an AR for the crop, or timely reported insurable acres as zero for the crop when there were actually planted acres, which would be considered unreported unit(s). In these situations, since there were no reported planted acre units:

(a) The units that pass the crop inspection may be added, and
(b) Any unit of the crop that is rejected during the crop inspection is considered an unreported unit, and the unreported unit procedure in paragraph 1234 must be applied.

(9) Record the appraisal on the appropriate Appraisal Worksheets for each unit of the crop being inspected. (Follow the appraisal and Appraisal Worksheet instructions (including insured and adjuster's signatures) in the applicable crop LASH for the crop being inspected);

(10) Submit to the AIP, the original or revised AR prepared during the inspection, the appraisal worksheet, and a Special Report with the following information:

(a) Whether any significant damage has occurred on the unit, and
(b) Whether the appraisal for the unit acreage (reported and insurable unreported acreage) was at least ninety percent (90%) of the yield upon which the per-acre guarantee or per-acre amount of insurance is based can be expected under the current crop, moisture, and weather conditions.

(11) Inform the insured that he/she will be notified in writing by the AIP of approval or rejection of the acreage.

734-800 (Reserved)

PART 8 INSPECTION DUTIES & RESPONSIBILITIES
Section 1 General Information

801 All Inspection Types

Before the appointment and loss adjustment inspection are made, the AIP must:

(1) Thoroughly review all documents in the contract folder or data from the processed documents that are applicable to the inspection. Some information must be verified by the adjuster at the time of the on-the-farm visit.

(2) Ensure there is a properly accepted application confirmed by a policy confirmation (defined in the GSH). For further information regarding the application, refer to the CIH.

(3) Verify that all timely completed and submitted policy changes for the crop and crop year that would affect the loss adjustment inspection and indemnity payment have been processed. If it is discovered during the loss inspection that a timely completed and submitted policy change has not been processed, contact your AIP for further instructions. Refer to the CIH for more information regarding changes in plan of insurance, percentage of projected price or price election, and coverage level. For information on the Policy Cancellation, refer to the CIH.

(4) Verify whether any WA is in effect for the crop and crop year being inspected. If there is, read the entire agreement and determine how it affects the crop being inspected; e.g., a practice that is not otherwise insurable is insurable via this agreement, etc.

(5) Verify the following using the AD:

(a) The actuarial classification recorded on the AR and/or Summary of Coverage is correct for the land location, etc.

(b) The insured's correct map area actuarial classification utilizing the actuarial maps. Verify if the location of the insured's land lies within a high risk area (e.g., AAA, BBB, etc.), or in an unrated area identified on the actuarial map.

(c) The insurability of the actual cropping practices performed, types, varieties, classes, or subclasses planted and the intended uses of the crop.

(d) The COL is not excluded for this crop or county in the AD.

(e) SP statements for the crop and county being inspected have been followed.

(1) If it is after the ARD, there must be an AR on file with the AIP before a claim can be filed. Refer to the CIH for AR discrepancies and misreporting situations.

(2) Verify with the insured the correctness of all AR information, including whether all crop acreage (insurable and uninsurable) has been reported (refer to paragraphs 803 and 804). Also, refer to paragraph 1234 for detailed information on unreported units. For non-loss units, verifications other than with the insured do not have to be made. However, for loss units, verification with the insured as well as other field verification requirements must be made. Acreage must be "determined" for loss units but not non-loss units. Acreage determinations must be made in accordance with paragraphs 821 and 822.

(3) Prior to a farm visit, if an error is found in the AR information requiring a revised AR, complete an on-the-farm inspection and continue verification of information on the AR as follows: Refer to the CIH for revised AR instructions.

(a) Verify that the crop acreage was actually planted and that the crop is insurable in accordance with the crop insurance policy. If planting is questionable, sample areas of the field to find evidence of planted seed, request seed tickets, and any other records needed to verify actual planting. If insurability is questionable, further investigation is needed relating to the area questionable, such as seed variety being adaptable to area, that seed planted was viable seed, etc. Contact your field supervisor for assistance and guidance. Refer to the CIH for more details on insurable (insured), uninsured, and uninsurable crop acreage.

(i) Verify that the type, class, or variety actually planted is insurable as defined in the crop policy/endorsement (or if applicable, by WA), and that it has not been excluded by the AD.

(ii) If the type, class, or variety is found to be uninsurable, revise the AR to remove all acreage with the uninsurable, type, class, or variety.

(b) Verify the planting dates with the insured and by field inspection.

(i) If the insured confirms these dates, but the reported timely-planting dates or reported late-planting dates do not correspond to the growth stage of the crop in the field, taking weather conditions into consideration, further investigation is needed. Request seed ticket receipts from the insured or where the seed was purchased. The adjuster or other AIP representative will verify with the seed dealer the amount of seed purchased and date purchased and whether any seed was returned, etc., to help make determinations of planting dates. It may be necessary to visit with neighbors or others who may frequently travel past the fields in question.

(ii) Revise the AR if any acreage reported timely was planted after the FPD or if any of the reported LP dates are incorrect, revise the AR accordingly. Refer to the late-planted acreage procedures in part 5, section 2.

(c) Verify that all insurable and uninsurable acreage for the crop has been reported. If any of the acreage reported as insurable is uninsurable, revise the AR to designate such acreage as uninsurable. Refer to the CIH for information about uninsurable acreage. For annually planted crops, if it is past the FPD, verify that all acreage planted has been reported for all fields

(d) Verify the actual planting practices carried out by the insured. Verify that the actual practice is insurable, as shown in the AD or WA, if applicable. If the practice is not insurable, revise the AR and designate such acreage as uninsurable acreage, and verify that the production from this uninsurable acreage and insured acreage has been kept separate. If production was not kept separate, follow the procedures in paragraph 1233 for commingled production. Use the actual planting practice on the PW except as explained in subparagraph 722A(11).

(e) Land identifier for the crop acreage (e.g., legal description, FSA FN, or CLU number, if provided to the insured by FSA, etc.). Verify the physical location against the land identifier on the AR by using FSA documents or other verifiable documents as references during inspection of the fields.

(f) Verify with the insured, and as instructed in the GSH, that the share reported is correct. Shares cannot be increased at loss time. However, if the share is lower at the time of the claim, the claim must reflect the correct lower share.

(g) Verify with the insured and via lease agreements or FSA records or other verifiable documents, the name of the person(s) sharing in the crop. Refer to the GSH.

(h) The AIP must verify that the risk classification is correct by verifying the physical location of the acreage against the AD (or WAs, if applicable) or FSA documents if FSA FNs are applicable.

(i) AIPs must verify that the legal description and FSA FN for each unit on the AR is the same as on the APH form.

(j) Verify that the unit numbers reported are in accordance with the applicable individual CP or endorsement or, if applicable, the unit division provisions in the AD or Unit Division Option.

(k) Review any information recorded in the remarks section that may be pertinent to this inspection.

(4) Verify that any harvested production from uninsured or uninsurable acreage was kept separate from the insured acreage. If it was not, refer to the commingled production procedure in paragraph 1233.

803 Verifying Insurable Acreage

The adjuster must verify that the acreage on which the crop is planted is insurable, in accordance with the BP, CP, and SP. If uninsurable acreage is detected, notify your next level of supervision, and document on a Special Report the reason why the acreage is uninsurable. The following questions describe different loss situations with answers of whether the acreage is insurable. These situations assume that the acreage otherwise is insurable under the terms of the CP and AD (e.g., there is no uninsurable land designated in the AD).

Q1: How will the PTC be determined in situations when the insured plants more acreage than what is insurable under the CP, and there is no way to distinguish prior to harvest what the insured acreage and what the uninsured acreage was? For example: The insured has a contract with a processor for 80 acres, but the insured plants 90 acres of the insured crop within the same field. At harvest time, the insured harvests 80 of the 90 acres. If the insured and uninsured acreage were in separate fields (same unit), this would not apply unless acreage from both fields were harvested to fulfill the 80 acres under contract.

A1: The 10 uninsurable acres that were left UH will be appraised. Then the total production (harvested and appraised) from all planted acreage (whether reported as insurable or uninsurable) within the unit will be divided by the number of planted acres to establish the average yield per acre. This yield per acre will then be multiplied by the insured acreage to determine the PTC for the claim and subsequently for APH purposes. This approach eliminates the need to determine which acreage is the insurable acreage (e.g., 80 acres specified in the processor contract and 90 acres planted).

Q2: If the insured physically plants and reports (as insurable acres) more acres than are under contract (contract covers three different units), will LAF apply? For example, the insured has a contract with a processor for 160 acres across three units, but the insured has actually planted 166 acres in the three units. There is no way to distinguish prior to harvest what the insured and uninsured acreage for each of these three units will be. The insured has no way of knowing what acres the processor will bypass. If the insured tries to guess which 6 acres the processor will bypass, it could mean the insured will have a LAF applied if the insured guessed wrong.

A2: If the insured reports 166 acres as insurable among the three units, and 6 of those acres are bypassed because there is only 160 acres under contract, those 6 acres will be considered uninsurable and will be removed from the respective units on which the acreage was actually bypassed. Therefore, if any of the three units are going to be taken to harvest, claims cannot be finalized for any of the three units until harvest is complete. When part of the over-reported acreage within a field is bypassed, PTC for that field is determined as stated in A1 &Q1. If all three units have claims based on UH acreage, then: (1) The entire acreage in each unit will be appraised to determine the per-acre appraisal for each unit; and (2) The 6 uninsurable acres will be removed across the three units in proportion to the acres in each unit. No LAF will apply since the acreage is uninsurable, just as any acreage physically planted that the AIP determines is uninsurable would be removed and no LAF applied (e.g., uninsurable because the acreage didn't meet rotation requirements, etc.).

804 Verifying Insured Crop

(1) Verify whether the crop is insured in accordance with the BP, CP, and SP.

(2) When the adaptability of the seed or plant type/variety to the area is questionable (e.g., varieties not commonly produced in the area), consult with agricultural experts or organic agricultural experts as applicable. Document your findings.

(3) If it is determined that the crop or part of the crop acreage is not insurable, the AR must be revised to show such acreage as uninsurable acreage.

805 Verifying Unit Structure

Unit verification will be made by the adjuster during an on-the-farm inspection; however, no further division of OUs will be made after the ARD. BUs will be corrected when found to be in error.

(1) Be knowledgeable with (and as needed refer to) unit provisions in the applicable policy provisions or endorsement/options (or if applicable, unit division provisions in the SP).

(2) Use the procedure for units as outlined in the CIH.

(3) If there is more than one BU, verify with the insured that the reported shareholders have an interest in the crop. If you suspect or question whether there is an interest or that there are separate insurable interests (such as spouse, children or other household members), contact the AIP.

(4) Verify the qualifications as stated in the CIH for an EU, EP, or MCEU (including primary county and the secondary county elected that is contiguous to the primary county). Refer to the CIH if it is determined that the insured does not qualify for an EU, EP, or MCEU during the loss adjustment inspection.

(5) Verify that the WFU contains all of the insurable acreage of at least two crops; and at least two of the insured crops must each have planted acreage that constitutes ten percent (10%) or more of the total planted acreage liability of all insured crops in the whole-farm unit. Refer to the CIH if it is determined the insured does not qualify for a whole-farm unit.

(6) For OUs:

(a) by section, section equivalent, or FSA FN, locate fields and verify that there is acreage planted in separate legally identifiable sections or other applicable OU separators allowed by the crop policy. Visit fields and determine whether planting patterns have crossed OU boundaries; e.g., section lines, FSA FN lines, or other section equivalent boundary lines.

(b) by IRR and NIRR practice, visit the fields and determine if planting patterns and other requirements outlined in this procedure qualify the unit as separate OUs by IRR and NIRR practices.

(c) insured under an organic farming practice, verify the acreage qualifies as organic farming practice acreage. Verify the acreage specified for the OU under the organic farming practice is correct by visiting the fields and verifying against organic records required under the policy provisions for organic farming practices. Refer to the CIH for additional information regarding organic farming practices.

(d) with Unit Division Option in effect, the section for the OU will be identified by the legal description of the parcels of land aggregated to form the "section." To verify the "section" qualifies for an OU, use the same procedure used to verify other OUs divided out by section; e.g., planting pattern does not cross section lines, production is kept separate, etc.

(e) by Written Unit Agreement (WUA) must be approved by the RMA RO. WUA may be completed for any Category B or C insured crop in the county. Refer to the WAH for more information.

Note: BUs will be corrected at loss time (or any other time they are found to be incorrect); however, no further division of OUs will be made after the ARD. Refer to the CIH.

(7) The adjuster will use the Unit Division Option and the parcels of land in the OU that are identified as being part of the OU to verify the location and size of the optional unit(s), and whether the unit harvested production has been kept separate by aggregated OU. If the harvested production has not been kept separate by aggregated OU, the OU must be collapsed to a BU as stated in the CIH.

806 Verifying Insurable Share

(1) Verify the insured has an insurable interest in the crop (insured's correct share by crop) by comparing the reported share on the crop insurance to the insured's share shown on:

(a) Lease agreements, elevator summaries, packer statements, marketing records, etc.; or
(b) FSA-578. Do not use other FSA documents to verify crop share since these documents may contain "contract" shares rather than crop share. When crop shares are reported to FSA, AIPs do not have to verify crop shares reported for crop insurance with the crop shares reported to the FSA, but are encouraged to do so since AIPs must ensure that producer-certified information is accurate so liability is established and indemnities are paid in accordance with the CP.

(2) Verify there is only one share for the spouses shown on the AR, unless the spouses are legally separated or separate under State law. Refer to the GSH for separate policy criteria. However, the FSA-578 may list two, as explained in (a) below. If two crop insurance policies are identified, it must be verified that the spouses qualify for separate policies.

(a) When AIPs verify with the FSA-578s, it is normally considered a discrepancy if the crop shares reported for crop insurance and the shares reported on the FSA-578 do not match.

(b) The same is true for names and person types. However, in some cases because of the "two person" recognition, the producer's name, person type (e.g., partnership vs. individual), and/or share listed on the FSA-578 program can be in disagreement.

(c) When it is verified that the spouses do not require separate policies:

(i) The share reported for crop insurance purposes will be considered correct if the total of the two shares listed for the spouses on the FSA-578 equals the same percentage as reported for crop insurance purposes. However, if it is determined the insured failed to provide the spouse's SSN, refer to the GSH to determine how this will affect the insured's coverage.

Note: The AIP must document the facts in the Narrative of the PW or on a Special Report.

Example: Insured A is the only name listed on the wheat insurance application. Insured A reported a one hundred percent (100%) share in FSA FN 2020 to the AIP, but the FSA-578 shows that Insured A has a sixty percent (60%) share in FSA FN 2020, and an FSA-578 shows that Insured A's spouse has a forty percent (40%) share in FSA FN 2020. The total of the two shares reported on the FSA-578 equals the same percentage reported for crop insurance purposes. Therefore, there would be no discrepancy in shares reported for crop insurance purposes and those reported to FSA.

(ii) A share discrepancy exists when the total percentage of the two shares reported on the FSA-578 for non-crop insurance purposes does not equal the same percentage reported for crop insurance programs. Resolve the share discrepancy in accordance with paragraph 807.

(d) When FSA has recognized the spouses as being separate entities, and the AIP has verified that spouses are legally separated or separate under State law and has recognized them as separate persons by giving each spouse a separate policy, the share reported on each spouse's crop will be compared against the crop share reported to FSA for the individual spouse. Each operation will have separate FSA FNs. If the individual spouse's crop share amount does not agree with what has been reported to FSA for non-crop insurance purposes, handle in accordance with paragraph 807.

(3) Document the sources used for share verification and anything else pertinent to the share verification.

(4) When it is questionable whether the insured has an insurable interest in the crop, document the circumstances on a Special Report. Forward the Special Report to the next level of supervision and include the insured's contract folder if it has been assigned to you.

(5) Using the following information, the adjuster (or AIP if specified) must verify:

(a) Person type processed from the application reflects the correct person (individual, partnership, corporation, co-owner, joint operator, estate, trust, etc.).

(b) The person qualifies for the entity shown on the application or qualifies for a separate person from another household member, relative, corporation, etc., and the person on the application has an insurable interest in the crop.

Note: Use information obtained from the insured, FSA or other reliable sources, and from the criteria for each person type found in the GSH.

Example: It appears the person (name and entity type) shown on the application has no insurable interest in the crop because the person shown on FSA documents, marketing records, etc., do not agree with the person on the application. This situation may allow a correction to the person shown on the application (refer to correctable information as outlined in the GSH). However, the policy must be voided if it is determined the person shown on the application has no insurable share in the crop due to concealment, misrepresentation, or fraud (refer to section 27 of the BP).

(c) Producer qualifies as landlord, owner-operator, or tenant.

(d) Whether the insured is married and, if so, whether the insured has provided the spouse's SSN or EIN. Refer to the GSH for requirements of the spouses SSN/EIN. AIPs do not have to verify persons through FSA; however, are encouraged to do so since AIPs must ensure that producer-certified information is accurate and that liability is established and indemnities are paid according to policy provisions.

(e) The person has authority to sign the document. Refer to the GSH for a list of the person authorized (and documentation required for such authorization) to sign documents (including loss documents) for each person type and documentation required for each person type.

(f) The RAN has not expired (as stated in the GSH) before an indemnity, replanting payment, or PP payment is made.

(6) If the person type reported is questionable or incorrect, document the facts and refer the case to the next line of supervision or to whom the AIP has instructed.

(a) If the person type is verified at FSA and there is a discrepancy between the person type recorded for crop insurance and the local FSA office, AIPs will try to resolve the discrepancy with FSA. If the discrepancy cannot be resolved and the AIP has evidence supporting its position, the AIP should retain the person type reported to them; and keep on file all documentation and evidence supporting this decision.

(b) The insured or the agent's certification and/or statement are not adequate documentation (evidence) to support questionable person types or discrepancies between the person types reported to FSA and the AIP.

(1) If the shares on the crop insurance by crop, do not agree with the shares on marketing records, lease or share agreements, FSA-578 (does not have to be used for verification purposes (refer to (3) below)), or other documents or actions of the insured that reflect crop share, resolve these discrepancies as follows:

(a) If there is a written lease/share agreement in force, use the share identified on the agreement, unless the marketing records or FSA-578 (does not have to be used for verification purposes, (refer to (3) below)) or actions of the insured do not substantiate the share identified in the agreement; whereas, handle as stated in (1)(c) below. Refer to (2) and (3) below.

(b) If no written lease/share agreement is in force but crop shares are reported on the FSA-578, use the share identified on the FSA-578 if it is used for verification purposes (refer to (3) below)); unless marketing records or actions of the insured do not substantiate the insured's share identified on the FSA-578, whereas, handle as stated in (1) (c) below. Refer to (2) and (3) below.

(c) If no written lease/share agreement is in force or the share shown on a written lease/share agreement or FSA-578 (does not have to be used for verification purposes, (refer to (3) below) is not substantiated with marketing records and/or actions of the insured, determine the share from the marketing records and/or actions of the insured. Refer to (2) and (3) below.

(2) Marketing records may include settlement sheets, canceled checks, seed receipts, fertilizer receipts, chemical receipts, etc. Actions refer to other arrangements the insured may have made with the other party sharing in the crop; e.g., every third load is delivered to the other party sharing in the crop, etc. If there is evidence to support that the lease/share agreement is a scheme to acquire more USDA benefits, the AIP may, by policy provisions, void the contract.

(3) AIPs are not required to verify crop shares reported to FSA but are encouraged to do so since AIPs must ensure that producer-certified information is accurate and that liability is established and indemnities are paid according to policy provisions.

(4) Document your findings. The AIP will maintain documentation and copies of any applicable agreements and marketing records that substantiate the insured's correct share.

808-820 (Reserved)

821 General Information & Methods

Determined acres are required on some preliminary claims and all final claims as specified in the LASHs. Determined acres must consist of only insurable crop acres. Non-crop acres must also be measured so that this measurement can be deducted from the total measurement of the field, orchard, etc. Refer to illustrated example in subparagraph 822B(7).

For producers utilizing PFTS, electronic record outputs for planted and harvested acreage may be acceptable provided all requirements in subparagraph I, below are met. Acreage measurements must only be made by (1) the AIP (AIP approved PFTS planter monitor records shall be considered to be equivalent to AIP measured acres. Refer to subparagraph 821I(2)(b)); (2) FSA; (3) or a disinterested third-party firm whose primary function is land measurement (i.e., measurement service). Use the following procedures for determining acreage:

A. FSA Measured Acres

(1) Acres measured by FSA through or during a spot check of the insured's certified acres for the current crop year, may be used as the determined acres for claim purposes if they are available at the time the claim is worked. If the AIP has reason to believe the FSA measured acres are incorrect, the AIP must re-measure the acres and use the re-measured acres for the claim.

(2) If FSA re-measures a permanent FSA-Crop field solely because of obtaining new measurement equipment (or application of new measurement methods), they are re-measuring all producers' fields, and the insured's field is re-measured after the time the insured reported the previously FSA-measured acres on his/her crop insurance AR, then:

(a) The previous FSA-crop field measurement the insured reported will remain in effect for that crop year and will be the determined acres used by the adjuster to settle any claim;

(b) No corrected claim will be prepared when this situation occurs; and

(c) The results of FSA re-measured acres, if different, will not be used until the subsequent crop year, unless allowed in the CIH.

B. Measurement Service

(1) If the insured has provided documentation to the AIP that they requested acreage measurement from FSA or a firm whose primary function is land measurement services prior to the ARD and has submitted the documentation of the measurements as described in the CIH, the acres measured by the measurement service will be used as the determined acres, provided the measurement was performed by a person that has no conflict of interest as described in the SRA and provided it is acreage to be used when irreconcilable differences occur, as stated in C below. If an acreage measurement is only requested for a portion of the acreage within a unit, the insured must separately designate the acreage for which an acreage measurement has been requested. If the AIP re-measures, follow the direction in subparagraph 821E(2) for AR revisions.

(2) For loss adjustment purposes, acreage measurements performed by a measurement service operated by a sales agent or in which the sales agent is associated are not considered "measured acres" to use as the "determined acres" on the PW. Therefore, if the acreage has not been measured by FSA or the AIP and none of the items (reasons acreage must be measured) in subparagraph F apply, follow the procedures in subparagraph E "Acres not Measured." If the criteria in subparagraph E(1) have not been met and the acreage measured by the AIP or FSA is different than the reported acres, an LAF will not apply if the insured fulfilled all of their policy requirements for measurement service.

(3) If the measurement service has not provided the insured with the completed acreage measurements by the ARD, the insured must submit estimated acres to the agent for the AR. As soon as the insured has received the acreage measurement, the insured must submit it to the agent. The AR will then be revised to reflect the measured acres, unless the AIP or FSA has made a measurement of the acreage and there is a discrepancy. Refer to subparagraph 821K for more information on discrepancies.

(4) If the insured fails to provide the measurement to the AIP:

(a) By the time a NOL has been filed with the AIP, the AIP must determine the acreage and make whatever adjustments are required by the BP if the estimated acres reported are incorrect, unless the insured and the AIP agree in writing to wait for the Measurement Service's measurement. No LAF will apply.

(b) By the premium billing date and there was no NOL filed (AIP made no acreage determinations), the AIP will base the premium on the estimated acreage reported by the insured. If the acreage measurement is later provided, the premium must be adjusted to reflect the actual acreage.

(c) For the crop(s) that was/were to be measured, then in subsequent crop years, acreage measurements for any crop cannot be accepted after the ARD from this insured.

B. Measurement Service (continued)

Example: In 2015, the insured requested acreage measurements for corn and soybeans but never provided the measurements to the AIP. In 2016, the insured requested measurements for grain sorghum and dry beans. Even though the request was for different crops, the measurements cannot be accepted after the ARD because the insured failed to provide acreage measurements for a crop(s) in prior years. It also does not matter whether it is the same or a different AIP.

C. Differences in Acreage Measurements

Regardless of whether a measurement service is requested (e.g., difference is discovered during reconciliation process), the following applies:

(1) If there is a difference in measurements between or among the AIP, FSA, or a measurement service, an effort shall be made to reconcile these differences.

(2) If there is an irreconcilable difference between:

(a) The acreage measured by the AIP, FSA, or a measurement service, the AIP's measurement will be used.

(b) The acreage measured by FSA or measurement service, the FSA measurement will be used.

D. Previously Measured Acreage

(1) Use acres that have been previously measured for the current crop year by:

(a) FSA as described in A or B above unless the AIP chooses to measure the acres for the current crop year or believes the measurement is incorrect, or by other measurement service as described in B above.

(b) Another AIP (measurement of a companion contract) unless it is felt that measurement is incorrect.

(c) Because discrepancies between FSA's and AIP's acreage measurements may have to be reconciled at a later date, it is recommended that AIPs verify with FSA whether actual measurements of the acreage being inspected have been made, and if actual measurements have been made, to use those measurements. However, if the AIP believes the FSA measurement is incorrect and re-measures the acreage or chooses to make their own measurement and finds that their measurement is not in agreement with FSA's, the AIP should try to resolve the difference with FSA.

D. Previously Measured Acreage (continued)

(2) Prior year(s) measurements of a field that was measured by an AIP, local FSA office, or a measurement service, will be used if the acres have not been measured for the current crop year, provided the:

(a) entire field is planted to a single crop (same practices or types if there are separate guarantees), and

(b) field boundaries have not changed.

If there is reason to suspect that the measurements are not accurate, the acres must be re-measured as described in F below.

E. Acres Not Measured

If measured acres as described in subparagraphs A or D are not available, acreage has been measured by a measurement service owned or operated by the sales agent or in which the agent is affiliated, or no measurement service has been requested as stated in subparagraph B, then the following applies:

(1) The acres reported on the AR may be considered "determined acres" for claim purposes, if the:

(a) insured signed the AR indicating certification of the reported information; and
(b) adjuster can determine through visual inspection of the acreage and with the use of FSA certified ARs or aerial photo copies obtained from the local FSA office or other acceptable sources (e.g., providers of aerial maps or satellite imagery that clearly depicts the field boundaries, landmarks, etc.), that the acreage would measure within five percent (5%) of the acreage reported on the AR.

(2) If the information in (1)(b) above is not available or is unacceptable, the adjuster must measure the acreage as described in F below.

(3) If the adjuster measures the acres because the adjuster does not believe the reported acres would be within the five percent (5%) tolerance, the measured acres must be used even when the measured acres are within the five percent (5%) tolerance.

Example 1: The insured reports and certifies100 acres planted. The adjuster believes the acreage would measure more than 105 acres. The adjuster measures the acreage to be 104 acres. The 104 acres must be used as the determined acres even though it is within the five percent (5%) tolerance. Therefore, the insured has under-reported acres and all production from the 104 acres will be applied to the liability for the 100 acres the insured reported. A LAF will apply.

E. Acres Not Measured (continued)

Example 2: The following is an example of a situation where the reported acreage is within the five percent (5%) tolerance, but cannot be used as the determined acreage:

Previous measurement = 80 acres/field boundaries have not changed
Crop insurance AR = 80 acres of corn.
Entire field planted to boundaries, but about 2 acres are oats.

In this instance, the reported acres cannot be used as the determined acres. Either an actual measurement must be made (e.g., wheeled) or because the reported acreage is within the five percent (5%) tolerance, the acreage can be determined as follows: estimate the oat acreage and deduct from the reported corn acreage. Determined corn acres = 78 acres (80 - 2 = 78).

F. When AIP Must Measure Acreage

Acreage must be measured (or re-measured, as applicable) if it fails to meet the criteria described in subparagraphs A-E or if any of the following apply:

(1) Part of a unit is released, and that part released will lose its field identity (i.e., there will be no way to establish the amount of acres at the time of a final loss inspection because of the loss of field identity) unless the AIP has approved the PFTS records;

(2) Part of a field has been harvested and the rest of the field has not. In this case, the acres of the harvested and UH portions of the field must be determined by the adjuster's actual measurement[1] unless the AIP has approved the PFTS records;

(3) PFTS records have not been approved. Part of the fields in the unit has been harvested, and part of the fields in the unit has not been harvested. Measurements of each field are not available for the crop year. In this case, the acres of the harvested and UH fields must be determined by the adjuster's actual measurement[1];

(4) Part of the field is planted, and part of the field is claimed as PP acres. The acreage available for planting (total field acres minus non-cropland acres) in the field is not known and must be determined. If there are non-cropland acres within the field boundaries, the non-cropland acres and the planted or PP acres must be measured[1];

(5) The AIP or the insured has reason to question the accuracy of the measurement or does not agree with the previously measured acres;

[1] Measuring the entire field and the non-cropland acres to determine the acres available for planting, then measuring either the harvested or UH portion (or planted, unplanted, or PP portion, if applicable) of the field and subtracting that amount from the acres available for planting is acceptable. Additionally, if the field has a permanent measurement, after deducting non-cropland acres, only one of the portions of the field need be measured.

F. When AIP Must Measure Acreage (continued)

(6) Field boundaries have changed unless the AIP has approved the PFTS records;

(7) Only a portion of a field is planted and measurements for determining the planted portion are unavailable[1]. The total field acres are unknown and a PFTS was not used;

(8) Acreages of varying practices, types, appraisals, etc., (as appropriate to separate on the claim) are not separated; or

(9) When the field boundaries are not known and there are non-cropland acres, so that this measurement can be deducted from the determined acres in the field, orchard, etc.

G. Acreage Measurement of Perennial Crops

(1) When the adjuster inspects damaged acreage and discovers inspected acreage differs from the AR, if necessary, refer to the Producer's Pre-acceptance Worksheet. Also refer to the SP, CP, and LASH, as applicable, for information on added/reduced acreage.

(2) Measure perennial crop acreage using land acres (i.e., planimetered, wheeled/taped, GPS, etc.) with deductions for non-crop areas. Non-crop acreage must be determined in the same manner as when land-acre measurements are employed.

(3) Measure perennial crop acreage using tree/vine/bush acreage in limited situations as described below.

(4) When blocks/groups of trees/vines/bushes are removed, measure acreage using land acres or tree/vine/bush acre method, as applicable, and deduct such removed blocks from the determined acreage.

(5) For insured cranberry acreage only, bog maps developed by marketing organizations may be used for AIP acreage determination in lieu of the measuring methods listed in subparagraph G(1).

(6) Measure acreage of insured native stands or randomly planted pecan trees in accordance with the CIH.

(7) Land-Acre Measurements

(a) When an AIP elects to use this method, measure around the outside of each block/plot of trees/vines/bushes based on the spacing within row and between rows as described below.

[1] Measuring the entire field and the non-cropland acres to determine the acres available for planting, then measuring either the harvested or UH portion (or planted, unplanted, or PP portion, if applicable) of the field and subtracting that amount from the acres available for planting is acceptable. Additionally, if the field has a permanent measurement, after deducting non-cropland acres, only one of the portions of the field need be measured.

G. Acreage Measurement of Perennial Crops (continued)

(b) For the length, measurements should extend beyond the end of the rows, by ½ the within-row spacing, from the center of the outside plants on the end of the rows. However, where a road forms an orchard boundary, the measuring point will be ½ the spacing between tree rows not to extend past the center of the road.

(c) For the width, measurements should extend past the outside row of each block/plot by ½ the distance between rows.

Example: An orchard has 15' x 25' spacing, or an average of 15' between trees (center of tree to center of tree) within row and 25' between rows (center of tree to center of tree). Measurements would begin ½ of 15' (7.5') from the middle of the trunk of the end tree in the outside row extend ½ of 25' (12.5') from the outside row, using the same spacing and around the entire block (7.5' beyond the ends of the rows and 12.5' beyond the outside rows, referred to as the drip line).

(8) An AIP may elect to use the tree/vine/bush measurement method instead of land acre measurement method for the specific situations listed below.

(a) A particular tract of measured acreage contains different plant densities, ages, types, varieties, or other characteristics that have different T-Yields, or where crops are interplanted. The sum of the parts must be equal to the measured acreage.

(b) Acreage reduction due to stand reduction caused by disease, natural occurring weather-related events, or man-made events that occur prior to insurance attaching (e.g., buckhorning, dehorning, stumping, or grafting, etc.). Such acreage reduction is made when the reduction was not made prior to the acreage being reported for the current crop year, and:

(i) It is required by the SP;

(ii) When the AIP determines the reduction in stand is significant (refer to CIH for more information), or

(iii) For claims purposes, an acreage reduction is not made for the current crop year when the reduction in stand occurred after insurance attached.

(c) The acreage is irregularly shaped. Such acreage has not been previously measured, and there is no FSA aerial photograph for such acreage at the local FSA office.

(d) The acreage is composed of irregular terrain. Such acreage cannot be accurately wheel/tape measured, has not been previously measured, and there is no FSA aerial photograph for such acreage at the local FSA office.

G. Acreage Measurement of Perennial Crops (continued)

(9) When the AIP elects to measure tree/vine/bush acreage using one of the methods in subparagraphs (8)(a)-(d) above, any such measured acreage must not exceed the total measured acreage (i.e., unit acreage).

(10) Refer to exhibit 15 for instructions and calculation formulas for making tree/vine/bush acreage determinations on acreage with various planting patterns, acreage interplanted with more than one perennial crop, and acreage with missing or various size/age trees.

H. Measurement Methods

Acreage measurement for loss adjustment purposes must be performed by using:

(1) The measuring wheel, surveying devices, or GPS, remote sensing devices used in conjunction with aerial photos or satellite imagery;

(2) FSA-accepted measuring methods or devices used with aerial photos that are to scale (such as: polar planimeter, digitizer, or scale rule);

(3) A measurement service; or

(4) AIP approved PFTS planter monitor records.

Document in the Narrative of the PW or on a Special Report the method of acreage determination and any calculations used to arrive at the determined acres.

I. Acceptable Farm Management Records from Producers Using Precision Farming Technology Systems

This section will apply if the insured is utilizing the full PFTS from planting through harvesting.

(1) Acceptable PFTS must include at least the following components:

(a) GPS technology integrated with planter monitors, combine monitors, yield mapping software;

(b) The capability of producing summary reports that reflect planted acres, harvested acres, and harvested production; and

(c) Report of calibrations performed per manufacturer's requirements. Refer to subparagraph 931(7).

(2) Planted acreage records from PFTS used as determined acres:

(a) The AIP must inform the insured in writing of the automated planter monitoring system record requirements prior to planting.

I. Acceptable Farm Management Records from Producers Using Precision Farming Technology Systems (continued)

(b) For planted acreage records from automated planter monitoring systems to be acceptable as determined acres, the insured must provide the following information:

(i) Insured's name;

(ii) Unit number;

(iii) FSA farm/tract/field ID number, if applicable;

(iv) Legal description of acreage; and

(v) A printout from the PFTS with the following information:

(A) Crop name;
(B) Acres planted; and
(C) Electronically produced maps of planted acreage and acreage summary records. These records must show required discernable breaks between units or practices except as stated in (3) below.

(vi) If the insured planted overlapping rows within the planted acreage, the AIP must determine if the automated planter monitor records adjusted for overlapping planted rows. If the system did not adjust for the overlapping planted rows, the AIP must determine the acreage in accordance with subparagraph 821A-F, H and J, as applicable.

(3) AIP-approved PFTS automated planter records may be used to separate OUs on center pivots irrigation systems for IRR circles and NIRR corners without discernable breaks in the planting pattern (refer to the CIH) provided the insured can:

(a) document the automated planter monitoring system used;
(b) provide the acres planted and practice for each OU;
(c) provide production records by OU and practice;
(d) provide the required information in (1) above; and
(e) provide records of variable rate planting populations if recommended by ag experts.

(4) If the automated planter monitor acreage records provided by the insured are not reasonable, or the AIP has reason to question the records, the insured must provide the PFTS's raw data, and any additional records requested by the AIP. If the AIP determines the planted acreage records are not acceptable, the AIP must determine planted acreage in accordance with subparagraph 821A-F, H and J, as applicable. However, the production records from the PFTS's yield monitor may still be used.

J. When Measurement Estimates Are Allowed

Acreage breakdowns within a unit or field may be estimated if a determination is impractical. Some situations where acreage might be considered impractical to measure (but not limited to) are the following: flooded portion of a field; numerous potholes within a field; a levy breaking and resulting in removal/destruction of border(s) of the field or delineation of portion of the field planted and portion prevented from planting. Document why acreages could not be measured and also explain how the estimated acres were determined in the Narrative of the PW or on a Special Report. Total acreage for the field or unit must be determined in accordance with the procedures in subparagraph A-H above.

K. Revisions Due to Measurement Service

(1) If the insured provides documentation to the AIP that they have requested Measurement Service from FSA or a firm whose primary function is land measurement services (refer to (2) below), prior to the ARD, and submits an AR to the AIP with estimated acres by the ARD, the insured must provide the measurement to the AIP when the Measurement Service has completed the measurements.

If the measured acreage was different than the reported acreage, the acreage will be increased or decreased based on the Measurement Service's measured acres (even at loss adjustment time), unless there is a discrepancy between the acreage measurements of the Measurement Service and the AIP or FSA (refer to (5) below).

(2) Firms whose primary function is land measurement services may include those operated by sales agents or firms in which the sales agent is associated. For claim purposes, acreage measurements performed by a measurement service operated by or in which the sales agent is associated are not considered "measured acres."

(3) If the insured has not provided the acreage measurement by the time a NOL has been provided to the AIP, the AIP may:

(a) Defer finalization of the claim until the measurement is completed, and

(i) make all necessary loss determination, except the acreage measurement; and

(ii) finalize the claim in accordance with applicable policy provisions after the insured provides the acreage measurement to the AIP. If the insured fails to provide the measurement, the claim will not be paid; or

(b) Elect to measure the acreage and

(i) finalize the claim in accordance with the policy provisions; and
(ii) estimated acreage reported due to a measurement service will not be accepted from the insured for any subsequent ARs.

K. Revisions Due to Measurement Service (continued)

(4) If the acreage measurement is not provided to the AIP:

(a) at least 15 days prior to the premium billing date, the premium will be based on the estimated acreage and will be revised, if necessary, when the acreage measurement is provided.

(b) by the termination date, the insured will be precluded from providing any estimated acreage for all subsequent crop years.

(5) If there is an irreconcilable difference between:

(a) The acreage measured by FSA or a measuring service, and the AIP on-farm measurement, the AIP on-farm measurement will be used for the revised AR;

(b) The acreage measured by a measuring service, other than the AIP on-farm measurement, and FSA, the FSA measurement will be used on the revised AR.

822 Wheel Measuring Method

A. General Information

(1) Determine the basic lines of linear measurements needed to calculate the acreage. Refer to subparagraph B for examples of basic measurements (and formulas) required.

(2) Begin each linear measurement with the revolution counter turned to indicate all "0's." If the wheel has a white spoke, start with the white spoke on the ground and the counter at "0."

(3) Walk in a straight and direct line. Do not lift the wheel off the ground or allow the wheel to skip or bounce. If an obstacle (to the wheel) is encountered directly in the path, grasp the wheel with the handle shaft (so that the wheel will not turn in relationship to the handle), and move at a right angle to clear the obstacle. Place the wheel on the ground and wheel forward enough to clear the obstacle. Again, grasp the wheel and the handle shaft to immobilize the rotation, walk at a right angle again in order to be directly in line with the original path of measurement, and continue making the measurement.

(4) Note the position of the handle. It must be in the same position when being set to zero, as it is when it is read, at the end of the linear measurement. Additionally, at the end of the linear measurement, if the wheel has a white spoke, count the number of spokes past the last whole revolution of the white spoke, and add to the counter reading. If the wheel has ten spokes, each spoke past the white spoke is one-tenth of a wheel. Round according to procedure for the crop being measured.

A. General Information (continued)

(5) Non-crop acres must also be measured so that this measurement can be deducted from the total determined acres, provided they have not already been deducted from the determined acres; e.g., the measurement of a permanent field is with the deductions for non-crop acres. Refer to subparagraph B(7).

B. Wheel Measuring Formulas

For any of the following field formulas, if the crop acreage being measured is for Fresh Market Peppers, Fresh Market Tomatoes (Dollar Plan), Fresh Market Tomatoes (Guaranteed Production Plan), or Processing Tomatoes, refer to the applicable crop LASH for additional measurement instructions.

(1) When converting square wheels to acres, move the decimal three places to the left; i.e., 38,700 square wheels = 38.7 acres. 1,000 square wheels equals one acre.

Example: 1.0 chain = 10.0 wheels = 66.0 feet
1.0 wheel = 6.6 feet

(2) Square or Rectangular Field Formula: Length (wheels) x Width (wheels) = Square wheels. Move the decimal point three (3) places to the left to determine the acres.

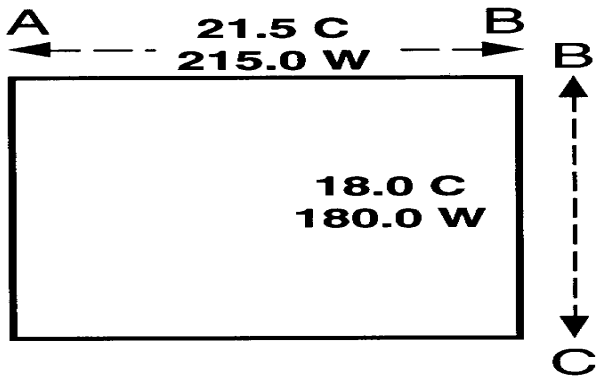

Length x Width
215.0 x 180.0 = 38,700
38.7 Acres

B. Wheel Measuring Formulas (continued)

(3) Triangular Field Formula: Base (Wheels) x Height (Wheels) ÷ by 2 = Square Wheels. Move the decimal point three places (3) to the left to determine the acres.

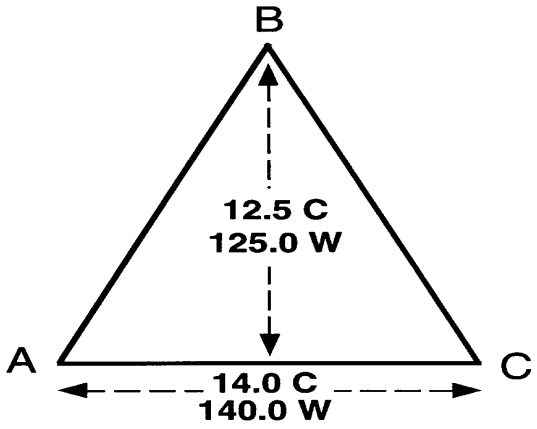

Base x Height
140.0 x 125.0
2
= 8,750
8.8 Acres

(4) Circular Field Formula: Diameter (Wheels) x Diameter (Wheels) x .7854 = Square Wheels (Move the decimal point three (3) places to the left to determine the acres).

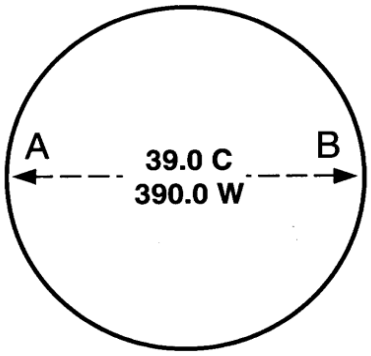

Diameter

390.0 x 390.0 = 152,100
152,100 x .7854 = 119,459.34
119.5 Acres

(5) Irregular Field Formula: Length (Wheels) x Average Width (Wheels) = Square Wheels (Move the decimal point three (3) places to the left to determine the acres).

40.0 + 35.0 + 60.0 + 50.0 = 185.0 ÷ 4 = 46.25
46.3 x 200.0 = 9,260 = 9.3 ACRES

B. Wheel Measuring Formulas (continued)

(6) Combination Field Formula: When a field will not conform to any regular formula, measure the field into regular pieces to determine the acreage.

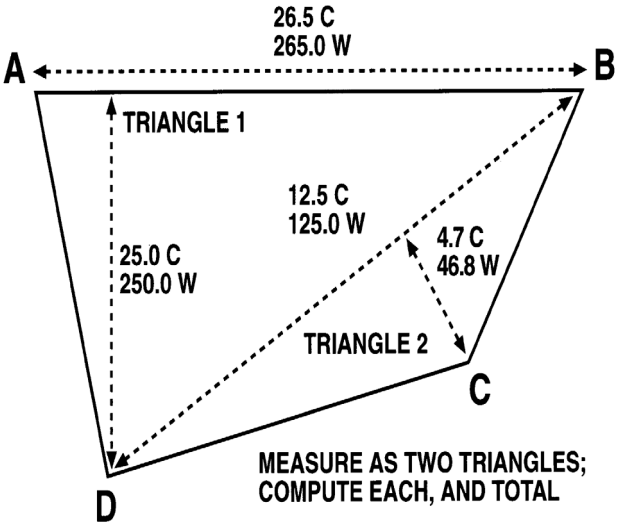

Triangle 1

$$\frac{265.0 \times 250.0}{2} = 33{,}125$$

33,125 = 33.1 Acres

Triangle 2

$$\frac{125.0 \times 46.8}{2} = 2{,}925$$

2,925 = 2.9 Acres

Total Acreage

33.1 + 2.9 = 36.0 Acres

(7) Deductions from Acreage: If any amount of acreage in a field is not planted to the crop it must be deducted from the total acreage in the field.

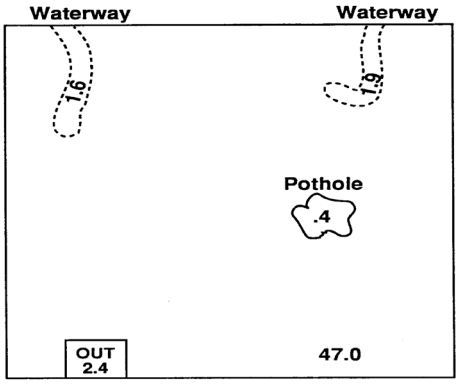

Field 47.0 acres minus deduction of 6.3 acres equals 40.7 insurable acres.

823 Determining Insured Acres from Skip-row Planting Patterns

(1) Skip-row planted crops are not insurable unless:

(a) Authorized by the CP;
(b) Authorized by the AD; or
(c) Insured under an Unrated TP WA. Refer to the WAH for additional information.

(2) The SP for NI corn for grain in certain counties provide specific criteria, including specific skip-row planting patterns, that must be met to insure skip-row planted NI corn for grain without a TP WA. A TP WA is required to insure skip-row planted corn for any specific types, practices or planting patterns not addressed in the SP, and any counties that do not identify skip-row planted corn as insurable.

The following table provides instructions for determining the number of acres considered planted to corn when acreage is planted on a skip-row basis.

IF the skip-row planted corn is insured…	THEN the number of acres considered planted to corn is…
Without a TP WA **Note**: To be insured without a WA, skip-row planted corn must meet all the requirements of the SP.	Based on the number of physical land acres planted to the crop. An FSA percent planted factor is not used to determine the number of acres considered planted.
Under a TP WA	Determined by the terms of the TP WA, which may include the use of an FSA percent planted factor.

Example 1: A 100-acre field in Phillips County, Colorado is planted to NI corn for grain in a, two rows planted one row skipped, planting pattern with a 30-inch row width. All the requirements contained in the SP are met; therefore, an FSA percent planted factor is not used to determine the number of acres planted. Accordingly, the total number of acres planted to the crop is 100 acres.

Example 2: A 100-acre field in Jefferson County, Kansas is planted to NI corn for grain in a, two rows planted one row skipped, planting pattern with a 30-inch row width. Skip-row planted corn is not insurable in Jefferson County, Kansas unless insured under a TP WA. The terms of the TP WA will determine whether an FSA percent planted factor will be used to determine the number of acres planted the crop.

(3) Skip-row planted grain sorghum is uninsurable unless authorized by the SP or insured under a TP WA.

(a) AIPs shall use the applicable FSA percent planted factor to determine the number of planted acres of grain sorghum planted on a skip-row basis. To determine the number of planted acres, multiply the number of physical land acres planted to the crop by the applicable FSA percent planted factor. Refer to the CIH for FSA percent planted factors.

(b) The number of planted acres determined using the applicable FSA percent planted factor is number of acres to be recorded on the insured's AR and PW.

(c) The skip-row planting pattern and row width established on the FPD is the planting pattern and row width that will be used to determine the number of planted acres.

(4) Skip-row planted cotton and ELS cotton is insurable in accordance with the applicable CP. For cotton planted in skip-row planting patterns, refer to the Cotton LASH and the CIH for the procedures.

824-830 (Reserved)

Section 3 Certification Form

831 General Information & Responsibilities

A certification form is used when the insured is unsure of the intended use of the insured crop, or has agreed to take a certain action, and a claim cannot be completed until the actual use of the crop can be verified, or the insured has completed the agreed upon action. Refer to exhibit 7 for Certification Form completion instructions.

(1) Complete a Certification Form:

(a) For a replant inspection, the insured will complete and submit the Certification Form to report the date replanting was completed, the number of acres replanted, and the replanting cost per acre if applicable;

(b) For a "Final" inspection for an immature crop when any of the following apply:

(i) All the acreage in the unit has been appraised to be put to another use or to be planted to second crop, the AIP should provide the insured with a certification form to notify the AIP that the appraised acreage has been destroyed, put to another use, or planted to second crop. When the insured has completed and submitted the certification form to the AIP reporting the date the crop was destroyed, put to another use, or planted to second crop, the claim can be finalized.

(ii) If only a portion of the unit acreage is to be put to another use, the AIP may provide the insured with a certification form, however the claim cannot be finalized until the adjuster makes another farm visit to determine the number of acres destroyed, put to another use, or planted to a second crop.

(iii) The adjuster must verify and document any zero appraisal on this acreage, as described in subparagraph 921A(9).

(iv) If the crop is a spring-seeded crop and insufficient soil moisture affected seed emergence (refer to subparagraph 921B(2)(d) for spring-seeded crops), insureds may request, and the AIP may authorize planting a second crop in rows adjacent to the first crop prior to destroying the seedbed of the first crop. The first insured crop claim cannot be finalized until the insured completes the certification form stating the dates the second crop was planted and the first crop seedbed was destroyed.

(c) For a "Final" inspection for a mature crop when any of the following apply:

(i) Prior to the time harvest is general in the area, all of the crop acreage on the unit has been appraised for release to another use.

(ii) During or after harvest is general in the area, the appraised crop acreage on the unit is to be released to go to another use when (A) through (C) apply or if the appraised crop acreage is to be destroyed, only as stated in (A) and (C) apply:

(A) The CP allow the mature crop production to be quality adjusted to zero PTC after such production is destroyed, as outlined in paragraph 1102.

(B) UH mature production is appraised at greater than zero.

(C) The mature crop production has ZMV and such production is required to be destroyed as stated in subparagraph 1102H(4).

(d) When the adjuster has not witnessed (or will not witness) destruction of production (disposal of nursery plants) and there is the requirement to destroy mature appraised or harvested production that (due to an insured COL) is to be considered zero PTC due to: (1) applicable quality adjustment (e.g., ZMV) or (2) in accordance with the applicable CP (or applicable crop endorsement, if applicable due to extent of damage to the crop (e.g., freeze damage to potatoes insured under Quality Endorsement). Refer to subparagraph 1102H for ZMV production.

Exception: The adjuster must witness the destruction of Burley and Flue-Cured Tobacco that AMS has assigned a grade shown on the Discount Factor Chart in the SP with a corresponding DF followed by "**." Refer to the Tobacco LASH.

(e) When production records are not readily available, for certain crops (or unavailability of price information to determine production value, if required to complete a claim; e.g., the quality of the cotton is not known to complete the claim). Refer to subparagraph 702C for the adjuster's instructions for completing the Certification Form and the instructions to provide the insured for returning the form.

(f) If the crop can never be mechanically harvested.

(g) If required to destroy an immature or mature crop or put an immature crop to another use on the entire unit before indemnification is waived due to wind and soil conditions as indicated in paragraph 1241.

(h) When the insured wishes to allow gleaning of the crop or remaining crop.

(i) For damaged nursery plants that will not recover to a saleable quality at any time after the loss occurrence will have a ZMV.

(2) When destruction of immature or mature production is required, or for nursery with damaged plants that will not recover any time after the loss occurrence, the adjuster must do the following prior to leaving the Certification Form:

(a) Discuss and agree with the insured a method(s) of destruction/disposal method acceptable to the AIP;

(b) Instruct the insured to enter the date the production was destroyed (disposal of nursery plants) and document in the "Remarks" section of the Certification Form, the destruction/disposal method; and

(c) Advise the insured that when the AIP receives the Certification Form back showing the insured's certification of the destruction (disposal of nursery plants) of the production (or nursery plants), that another on-the-farm inspection will be made to verify destruction/disposal of the production (nursery plants) and the destruction method.

(3) The insured must sign and date the Certification Form and return it to the person or office designated by the AIP.

(4) When the insured signs and returns the Certification Form with a proper indication of "Replanted," "Destroyed," or "Other Use" of the acreage, the adjuster must review and verify all data on the Certification Form and claim.

(a) The adjuster is required to make another on-the-farm inspection to verify destruction and the destruction method when there is zero PTC for:

(i) mature UH or harvested appraised production that is quality adjusted; or
(ii) damaged nursery plants that will not recover any time after the loss occurrence.

(b) Acceptable Destruction Methods and Documentation:

(i) An acceptable destruction/ disposal method is a method that will result in the production (or nursery plants) having no possibility of being marketed or of a salvage use that could result in any type of compensation to the insured. The insured should follow any method prescribed by State or Federal regulations or guidelines.

(ii) The adjuster must document on the PW or on a Special Report the method of destruction, whether destruction was an acceptable method, the date the verification and on-the-farm visit took place, and any other pertinent information.

(c) When a crop is replanted, put to another use (disked, plowed, planted, etc.) or planted to a second crop:

(i) If all data on the Certification Form and the claim agree, the adjuster signs and dates the PW. (The claim will have been prepared as a "Final" during the appraisal inspection and signed by the insured.) After receiving the Certification Form, the adjuster must review the Certification Form and the claim. If the data on the Certification Form and the claim agree, the adjuster may sign the PW and send both documents to the AIP within the time frame designated by the AIP. No follow-up inspection is required.

(ii) If any data on the Certification Form and the claim do not agree, the adjuster must not sign the PW. The adjuster will make another farm visit. If, during the subsequent farm visit, the adjuster still does not agree with the information on the claim, the claim will be voided, and a new claim prepared based upon the facts found on-the-farm visit.

832-840 (Reserved)

Section 4 Verifying Cause of Loss

841 General Information

(1) The insured COLs are clearly identified in the individual CP. Coverage of insured COLs must be due to drought, flood, or other natural disasters (as determined by the Secretary of Agriculture). Insured COLs by crop are listed in exhibit 3.

(2) When adverse weather is the applicable COL, RMA requires that the PW show the specific adverse weather event; e.g., "excess precipitation," "freeze," "hail," etc. exhibit 3 provides the codes for each of these COLs.

(3) If flooding is a named insured peril in the CP and due to excess precipitation, water spills over a containment structure (such as a dam) or there are controlled releases of water from the containment structure in order to mitigate flooding, any flooding downstream is an insurable COL, except as stated in 843(6).

(4) The insured must establish the COL; the adjuster will:

(a) Verify the COL during the on-the-farm inspection.
(b) Be satisfied that the damage or loss is due to one or more insured causes(s) of loss; e.g., drought cannot be an insured COL for acreage with an IRR practice; however, failure of the irrigation water supply due to drought would be an insured COL under an IRR practice. Each inspection must be an individual determination. If the COL appears to be different from what the insured has stated, document the facts on a Special Report. For more information, refer to part 12, section 2.

842 Hail & Fire Exclusion

When hail and fire have been excluded as insurable causes of loss and hail or fire is determined to be the sole COL, there generally will be no indemnity. Refer to the individual crop LASHs for instructions. Refer to verification requirements in paragraph 405.

843 Uninsured Causes of Loss

As specified in the BP, only unavoidable loss directly caused by specific causes of loss contained in the CP are covered. All other causes of loss, except where the CP specifically cover loss of revenue due to a reduced price in the marketplace, must be due to a naturally occurring event. All other COLs, including, but not limited to the following are not covered and are considered uninsured COLs:

(1) Any act by any person that affects the yield, quality or price of the insured crop (e.g., chemical drift, fire, terrorism, etc.);

(2) Failure to follow recognized GFPs for the insured crop (for additional information, refer to subparagraph 1221D);

(3) Failure or breakdown of the irrigation equipment or facilities, or the inability to prepare the land for irrigation using the insured's established irrigation method (e.g., furrow irrigation), unless the failure, breakdown, or inability is due to a COL specified in the CP. The insured must make all reasonable efforts to restore the equipment or facilities to proper working order within a reasonable amount of time unless the AIP determines it is not practical to do so. Cost will not be considered when determining whether it is practical to restore the equipment or facilities;

(4) Failure to carry out a good irrigation practice for the insured crop, if applicable;

(5) Any COL that results in damage that is not evident or would not have been evident during the insurance period, including, but not limited to damage that only becomes evident after the EOIP unless expressly authorized in the CP. Even though the AIP may not inspect the damaged crop until after the EOIP, damage due to insured causes that would have been evident during the insurance period will be covered; and

(6) Flood damage from water that is contained by or within structures that are designed to contain a specific amount of water, such as dams, locks or reservoir projects, etc., on any acreage when such water stays within the designed limits.

Example: A dam is designed to contain water to an elevation of 1,200 feet but the insured plants a crop on acreage at an elevation of 1,100 feet. A storm causes the water behind the dam to rise to an elevation of 1,200 feet. Under such circumstances, the resulting damage would not be caused by an insurable COL. However, if the insured planted on acreage that was above 1,200 feet elevation, any flood damage caused by water that exceeded that elevation would be caused by an insurable COL.

(a) PP coverage is not available on such acreage if the elevation of the contained water reaches or exceeds the land elevation of (or denies access to) the insured acreage between the SCD and the FPD shown on the SP for the crop. However, if the insured can prove conditions existed that would have prevented planting through the FPD prior to the contained water elevation reaching or exceeding the land elevation, the AIP may pay the PP claim based on case-by-case determinations. Refer to paragraph 1221 for Controversial Claim procedures.

(b) The adjuster must specify the body of water and document the elevation of the contained water at the time of loss, as measured by the Corps of Engineers and/or other reliable public or governmental sources that measure such water elevations. The adjuster/AIP must also document the elevation of the subject land for use as a comparison to the elevation of the contained water. To determine the elevation of the subject land, the AIP is responsible for obtaining maps or data containing the elevations for the acreage.

(c) There are several websites offering topographical maps that provide land elevations. One such source is the United States Geological Survey website. There are also many other commercial sites that sell CDs containing topographical maps.

(d) Refer to the Maps section of the AD for additional information affecting the insurability of the land, if applicable.

(7) During the on-the farm inspection, verification of whether the COL is insurable or uninsurable must be made. When it has been verified that there is an uninsurable COL it must be documented. Refer to paragraph 1221 for additional details about verifying whether there are uninsured COLs.

844 Abandon Versus not Following a Good Farming Practice

(1) Acreage where the producer has stopped caring for the crop, at whatever stage, is considered to have been abandoned, regardless of whether the crop was otherwise damaged by an insurable COL. There does not need to be an express intent to abandon the crop. The producer must simply have stopped all care for the crop, or the care provided must be so insignificant as to provide no benefit to the crop. An appraisal as stated in subparagraph 921A(3)(k) below must be assessed when the crop is abandoned.

(2) Although rare, the insured may decide to harvest the abandoned acreage if there is production that can be harvested. If this happens, and the harvested production from the abandoned acreage is commingled with the harvested production from the acreage not abandoned, all of the harvested production from the abandoned acreage will be included in the PTC.

(3) A crop damaged to the extent that harvest is not practicable will not be considered as abandoned because the producer fails to harvest the crop. In these cases, the producer should provide a NOL and the acreage should be appraised. For "failure to timely harvest" to be considered as abandonment, the crop must be in a condition where harvest would be considered as a GFP and no condition exists which would make it physically impossible to harvest the crop, such as the ground is too wet.

(4) Insured turns in a NOL after the act of abandonment. It must be considered abandonment if the insured stops caring for the crop prior to providing NOL and the time elapsed is such that the AIP cannot satisfactorily distinguish whether damage is solely from the insured cause or a combination of the insured cause and the abandonment.

(5) Insured abandons the crop for a length of time and then begins caring for the crop. If enough time has elapsed that the care is untimely and will not benefit the crop or the care is so insignificant that it does not benefit the crop, it is still considered abandonment as stated in (1) above.

(6) Acreage where the producer continues to care for the crop by performing all the practices needed to produce a mature crop, but does so inadequately, will be considered not following a GFP. The amount of loss attributed to not following a GFP will be considered an uninsured COL and included as PTC. These determinations must be on a case-by-case basis. The AIP must first determine whether the necessary farming and cultural practices have been carried out by the producer and, if they have, whether they were adequate. Refer to subparagraphs 1221D and 1221I for additional information.

845-900 (Reserved)

PART 9 ESTABLISHING PRODUCTION
Section 1 General Information

901 Insured & AIP Responsibilities

(1) The insured is required by the policy to keep complete records of planting, replanting, inputs, production, harvesting, and disposition of the insured crop on each unit for three years after the end of the crop year. This requirement also applies to all such records for acreage that is not insured. The insured must make these records available to the AIP, or any employee of USDA authorized to investigate or review any matter relating to crop insurance.

(2) The insured is responsible for providing separate records of production for each unit. In loss situations, the insured must notify the AIP for measurement of stored production when production from another unit, crop year, or uninsured acreage is to be added to existing production in a single storage structure prior to adding such production. Refer to paragraph 703 and 1003.

(3) If the adjuster determines during the inspection that separate records have not been kept for each unit, refer to paragraph 1233 for commingled production. Also, refer to paragraph 1233 if production from more than one P/T, which has separate APH yields, has been commingled.

(4) The adjuster must establish total production for each damaged unit from appraisals of UH production, appraisals for uninsured causes, prorated production from unreported units, measuring farm-stored production, and from verifying harvested production from the insured's records, as described in the following subparagraphs for the type of disposition. The total production for the entire damaged unit is the insured's production share plus the production share of each person sharing in the unit. If the insured has not kept acceptable records separate by unit (whether stored, fed, or sold), the production is considered commingled. Refer to paragraph 1233.

(5) The adjuster must obtain and document an estimate of total production per acre for each undamaged or non-loss unit of the indemnified crop from the insured or the insured's authorized representative and record as instructed in the crop LASH.

(6) The adjuster must accurately determine and enter in the appropriate column(s) of the claim the amount of established production for the entire damaged unit including production from unreported unit(s) if applicable. Enter the unit number and estimated production for each undamaged unit on the claim. Refer to the individual crop LASH for specific instructions. Production from unreported units discovered at loss time will be counted. Refer to paragraph 1234 for specific instructions.

Note: Production records from PFTS are acceptable provided they meet all of the requirements in subparagraph 931(7). Records of production from combine monitors that are not part of a PFTS are not acceptable for production records for loss purposes except as stated in paragraph 1003.

A. General Information

(1) Be aware and watch for certain problems while on the farm verifying the information you have collected, such as but not limited to, the following:

(a) Unreported production or acreage. When measuring a bin, if you notice another bin containing the same type of grain and the insured has not informed you of this fact, question the insured to determine where this grain was produced. If the explanation does not seem reasonable, document the facts and notify your supervisor.

(b) Unjustified difference in production. If one farm produced 30 bu. of corn per acre and across the road, a neighboring farm produced 100 bu./ac., determine if there is a justifiable explanation. Refer to paragraphs 1202 and 1203 regarding written and pictorial documentation.

(2) If there are differences in the quality of the insured's production from other units of the crop or from other producer's that cannot be justified considering the insured COL, document and contact your immediate loss supervisor for further instructions. Retain such documentation in the insured's loss file.

(3) Anytime the actual production reported is in question and you are going to meet with the insured about the questionable reported production follow the individual AIP's instructions regarding the meeting.

(4) Prepare a Special Report if there is unreported production or are unjustified differences in production between different shares or different units.

(5) Do not sign a claim if there is any evidence of additional production that has not been accounted for.

B. Verifying Total Harvested Production

Do not confuse the following procedures and section 14(c) of the BP with paragraph 924, which allows the AIP to authorize the insured to leave RSAs of the UH crop when the insured wants immediate release of a field to go to another use, replant, etc., but the appraisal cannot be made at the time.

When determining if total harvested production is correct, check:

(1) RSCs left intact in a harvested field for evidence of yield COL, whether GFPs were employed, quality of mature crop released to go to other use, etc.; i.e., stand, number of bolls or burrs, stage of maturity, size of stalk, plant population, etc. Insured's may be required to leave RSCs, as specified in section 14(c) of the BP and CP.

(2) If required intact RSCs were not left by the insured or were harvested before the field was inspected, examine the stubble, size of the stalk, amount of straw stubble, etc., to judge whether the amount of production turned in by the insured is reasonable.

B. Verifying Total Harvested Production (continued)

(3) With the insured when the amount of crop production submitted by the insured for the unit appears questionable (e.g., from visual inspection of RSCs, it appears the per-acre appraisal would be significantly higher than the production records submitted by the insured or the per-acre production is not comparable or reasonable for the area and/or acreage, etc.):

(a) Question the insured to determine if there could be missing tickets, fed production, production from this unit that was sold in another person's name, missing production records for commercially stored production, forgotten farm-stored production in another location, etc.

(b) If the insured cannot provide missing tickets, other records, or clarifying information as stated in (a) above and there are RSCs intact, complete a per-acre production appraisal from the RSCs and compare the per-acre production amount submitted by the insured to other comparable acreage production. If there is no comparable acreage available in the insured's farming operation, use comparable acreage from other neighboring farms. Comparable acreage is acreage that is planted to the same crop, following the same farming practices, management practices, similar planting dates, etc. If comparable acreage is not available from the insured's operation or from neighboring farms, refer to subparagraph 1221E(2)(c). If production is still questionable, refer to subparagraphs 902A(4) and C below.

(4) The harvested fields to determine whether there is an excessive amount of production remaining on the stalk, stem, ground (cracked, fallen, or discarded by the harvest equipment) etc., due to malfunctioning or improperly adjusted harvesting equipment, rather than due to an insured COL (such as lodging due to storm damage). Any excessive amount of production that is left in the field that could have been harvested and would have been counted as PTC if harvested, must be included on the PW as an uninsured cause appraisal.

(5) Other farming operations of the insured.

(6) The productive capacity of the land (i.e., is the land in a low swamp area or is the land highly fertile and dry?).

(7) For the presence of livestock or poultry to determine whether any of the current year's production has been fed. Also, refer to paragraph 933 for more information pertaining to fed production.

(8) The location and quantity of a crop retained for seed, or which has been sold for seed.

(9) Where the production is stored or sold, when production is questionable and the insured farms in surrounding counties.

(10) Whether the insured shares with a tenant/landlord.

C. Another Person Sharing in the Crop

The CP specify the production guarantee and PTC are determined on a total unit basis. Therefore, all PTC for the unit (including all the production owned by the various shareholders and quality that applies to the individual shareholder's production dependent upon its disposition) must be included when calculating the unit indemnity with the share applied at the end of the calculation.

When another person is sharing in the crop/unit:

(1) The adjuster must verify that all of the actual production for the entire unit(s) has been reported, (i.e., all production owned by the insured and various shareholders).

(2) The adjuster must verify and make production determinations of the other person's production share as you would the insured's production share; i.e., if the other person's production is farm-stored, storage measurements must be made as specified in paragraphs 1002, 1003, or 1005, whichever is applicable for the situation.

(3) When the other person sharing in the unit is uninsured, do not establish the total production for the unit based on the insured's production amount and share percentage, unless you are unable to establish it by any other means and the resulting total production for the unit is reasonable. If this should happen, document the circumstances preventing the measurement of the uninsured shareholder's share of the production, if farm-stored, or the reason the insured cannot obtain copies of the settlement sheets of the uninsured shareholders sold production along with other needed information/documents of the uninsured shareholder's sold production.

Note: The fact that the uninsured shareholder's share of farm-stored production is located in another storage structure at some other location is not a justifiable reason for determining the total unit production as stated above without making an attempt to obtain permission to make actual determinations of the uninsured shareholder's share.

(4) A claim for indemnity may be completed once the final disposition of the crop and any applicable QAFs (refer to (5) below for information regarding uninsured shareholders) are determined for all PTC within the unit, except:

(a) In the case where the quality provisions are in the SP and the production falls under section C3e of the QA provisions in the SP, the claim cannot be processed until the adjuster can verify that all shares of the unit production is sold, used, fed, or destroyed by the shareholders.

(b) In the case where the quality provisions are in the CP and the production falls under section 15(j) of the BP, the claim cannot be processed until the adjuster can verify that all shares of any unsold production is destroyed by all the shareholders.

C. Another Person Sharing in the Crop (continued)

(5) When the other shareholder is uninsured and the insured producer is unable to obtain the necessary information from the uninsured shareholder regarding the disposition of the production (e.g., if sold or not sold. If shareholder's production is sold, the shareholder's settlement sheet for the share unit(s) showing the RIV applied by the buyers), to determine the QAF for the shareholder's share of the production, such production is considered undamaged.

(6) If the other person(s) share is insured through another AIP, refer to the procedure for companion contracts in paragraph 401.

(7) Refer to paragraph 1102 for more detailed information and examples. Also refer to exhibit 16 for examples involving crops with quality provisions in the SP.

903 Bypassed Acreage

A. General Information

Bypassed acreage procedures are applicable to crops under a processor contract that must be harvested within a certain timeframe to be acceptable by the processor; and have the definition of "Bypassed Acreage" within the CP; e.g., green peas, processing beans, processing pumpkins, processing tomatoes, and processing sweet corn.

Exception: References to bypass and the procedures in this paragraph, as applicable, may also be applicable to sugar beets that are not acceptable to the processor due to an insured cause and are not timely harvested.

(1) Inspections must be made by the AIP on all UH acreage of insured crop to verify the COL and the reason the acreage was bypassed by the processor.

(2) Appraisals are not required on acreage bypassed due only to an insurable COL. Appraisals will be made on all UH acreage when any uninsurable COL prevented timely harvest of the crop.

(3) The insured must provide acceptable documentation of the reason the acreage was bypassed. Sometimes such acreage is bypassed by the processor for reasons that have nothing to do with an insurable COL that is preventing or delaying harvest. Failure to provide such documentation will result in the AIP's determination that the acreage was bypassed due to an uninsured COL.

(4) Do not include processor payments for bypassed acreage in any appraisal or as PTC.

B. Bypassed or Not Timely Harvested Due to Insured Cause

(1) Production losses from UH, not timely harvested, or bypassed acreage of the insured crop are insurable if the losses are due to an insurable COL (as stated in the CP), such as adverse weather conditions. Adverse weather includes, but is not limited to:

(a) Excessive moisture that prevents harvesting equipment from entering the field or that prevents the timely operation of harvesting equipment; and

(b) Abnormally hot or cold temperatures that cause an unexpected number of acres over a large producing area to be ready for harvest at the same time, affecting the timely harvest of a large number of such acres or the processing of such production is beyond the capacity of the processor, either of which causes the acreage to be bypassed. Not applicable to sugar beets.

(c) For sugar beets, if the ground has frozen to the point that the sugar beets cannot be harvested with normal harvesting equipment or would not be accepted by the processor due to freeze damage.

(2) Refer to the applicable CP for NOL requirements. The insured should contact the AIP immediately upon being notified that acreage will be bypassed so an inspection by the AIP can be made, but not later than the time specified in the CP.

(3) The stage column on the PW will show "UB" for UH acreage that is bypassed or not timely harvested by the processor because the insured crop was damaged due to insured causes of loss. The potential production per acre shown on the PW in the column for appraised potential will be zero ("0"). Consistent with the PW, no production from the bypassed acreage will be counted for APH purposes.

C. Bypassed or Not Timely Harvested Acreage Due to Uninsured Cause

(1) Insurance coverage is not provided on any loss of production if acreage is not timely harvested (unless such delay in harvesting is solely and directly due to an insured COL) or is bypassed due to:

(a) breakdown or non-operation of equipment or facilities;
(b) the availability of a crop insurance payment;
(c) failure to follow the requirements contained in the processor contract; or
(d) for some CP, bypassed acreage would not be insured if the following apply (Check the applicable CP to see if either (a) or (b) or both (a) and (b) apply):

(i) The insured and the processor are the same or related persons, or insured acreage was not harvested first, or

(ii) Acreage insured under the terms of the applicable CP was bypassed and acreage not insured under the applicable CP was harvested instead.

C. Bypassed or Not Timely Harvested Acreage Due to Uninsured Cause (continued)

(2) The stage column on the PW will show "PB" for UH (bypassed) acreage when the insured COL did not prevent the processor or producer from timely harvesting (e.g., the processor over-contracted, equipment breakdown, etc.). The potential production per acre (as of the date the crop should have been harvested) shown on the PW in the column for appraised potential will be the appraised amount and will be counted as production against the guarantee for claim purposes and for APH purposes.

(a) A separate appraisal is required to assess production lost on acreage damaged by uninsured causes of loss (i.e., livestock damage, failure to follow GFPs, etc.). The appraised per acre production from such acreage will be shown on the PW in the item for uninsured causes. This appraisal for uninsured causes will not be counted for APH purposes.

(b) Although acreage may have been bypassed and an insured COL did not prevent harvest (e.g., the processor over-contracted, equipment breakdown, etc.), an appraisal which shows production below the unit guarantee due to insurable causes (e.g., drought reduced the potential prior to bypass) may result in an indemnity.

D. Damaged and Undamaged Acreage in the Same Field

When there is damaged and undamaged insured crop acreage in the same field (and can be identified as such) and the processor chooses to bypass the entire field instead of accepting the harvested production or the processor harvesting the undamaged acreage, the damaged and undamaged acreage will be divided into separate subfields.

(1) An appraisal is not required on the damaged acres, provided the AIP can verify the damage was due to an insurable COL.

(2) The undamaged acreage will be appraised and the production will be counted as PTC for claim purposes.

E. Production to Count When No Insured Cause of Loss Prevented Timely Harvest

When an insured COL did not prevent timely harvest of the crop, the PTC for the insured crop acreage that is bypassed or not timely harvested will include:

(1) The appraised production on UH acreage;

(2) Any production or value lost due to uninsured cause(s), whether harvested or UH acreage; or

(3) For green peas, processing beans, processing pumpkins, processing sweet corn, and processing tomatoes:

E. Production to Count When No Insured Cause of Loss Prevented Timely Harvest (continued)

When harvested/delivered production from any acreage is not timely harvested, the amount of harvested PTC will be determined by dividing the dollar amount payable under the terms of the processor contract for the quality and quantity of the insured crop delivered to the processor, by the base contract price per tons (pounds for green peas).

If the price paid for the harvested production has been reduced because of quality deficiencies resulting from not timely harvesting (when an insured COL did not prevent timely harvest of the insured crop), an appraisal for uninsured cause will be required. Subtract the amount paid from the amount that would have been paid before the price reduction. Divide this amount by the contract price and enter the result in the column on the PW for uninsured cause appraisals.

904 Gleaned Acreage

A. General Information

(1) FCIC encourages and promotes gleaning efforts of insureds. AIPs are encouraged to allow gleaning in situations where a crop or portion of a crop may otherwise go unused or be destroyed.

(2) In cases where FCIC normally requires destruction of harvested or UH ZMV production, gleaning can be allowed as long as the crop does not contain substances or conditions identified by the Food and Drug Administration or other public health organizations of the United States as injurious to human or animal health.

(3) If any compensation is received by the insured for the gleaned crop from any qualified charitable organization, it will not be considered gleaning for crop insurance purposes. Compensation for non-crop items, services, labor, etc., as described in (1) below is not considered compensation for the crop.

(4) FCIC will allow gleaning only when the crop will be gleaned by a charitable organization defined as a 501(c)3 (nonprofit organization) and the insured has not received compensation from such organization (refer to subparagraph D).

(5) Pertinent information to protect the insured (the donor) for liability issues can be found in:

The Bill Emerson Good Samaritan Food Donation Act:
www.gpo.gov/fdsys/pkg/PLAW-104publ210/pdf/PLAW-104publ210.pdf

The Volunteer Protection Act of 1997:
www.gpo.gov/fdsys/pkg/PLAW-105publ19/html/PLAW-105publ19.htm

A. General Information (continued)

(6) The charitable organization's name and address will be shown in the Narrative section of the PW or on a Special Report.

B. Gleaning Harvested Acreage

(1) Gleaning will be allowed on crop acreage that has been harvested as long as any remaining crop production on the harvested acreage cannot be harvested using normal and proper harvest methods (e.g., production from lodged corn that can only be hand harvested).

(2) Some CP (e.g., tomatoes, peppers) state that production not meeting the specific requirements of the CP will not be considered PTC; other CP may contain similar provisions. Producers should be encouraged to permit such production to be gleaned.

(3) For harvested production determined to be ZMV and that is required to be destroyed (e.g., corn with QAF of .000); gleaning or food recovery of any salvageable production will be allowed (except as limited by subparagraph D) and such production will not be considered as PTC.

C. Gleaning Unharvested Acreage

(1) If the crop can be harvested, but the insured elects not to harvest, the acreage must be appraised before gleaning is allowed and such appraisal will be used as PTC.

(2) On crop acreage that is routinely mechanically harvested and is damaged by insured causes (e.g., wind, hurricane, etc.) to the extent that it cannot be mechanically harvested with normal harvest equipment, no production is currently counted. However, if the insured elects to hand harvest or use specialized harvesting equipment, the production is counted. If the insured elects to allow gleaning in these situations, production on this acreage will not be considered PTC.

(3) For UH production determined to be ZMV and that is required to be destroyed (e.g., UH potatoes in excess of five and one tenth percent (5.1%) tuber rot that could not be sold); gleaning or food recovery of any salvageable production will be allowed (except as limited by subparagraph D) and such production will not be considered as PTC.

(4) When gleaning is allowed for acreage qualifying as UH acreage, the acreage that is gleaned will not be considered harvested.

D. Compensation for the Gleaned Crop

(1) Situations not to be considered compensation for the gleaned crop:

(a) State tax credits and other State or Federal tax advantages for donating gleaned commodities.

D. Compensation for the Gleaned Crop (continued)

(b) Reasonable compensation from a qualified charitable organization to the insured for harvest and/or transportation of the gleaned (donated) crop:

(i) the qualified charitable organization indicates in writing the amount of compensation and that the compensation is solely for reimbursement of harvest and/or transportation costs incurred by the insured, and

(ii) the insured certifies in writing that the compensation is solely for harvest and/or transportation costs.

(2) Situations considered to be compensation for the gleaned crop:

(a) When the qualified charitable organization and/or insured have not provided the required information in writing as specified in (1) above, the compensation received will be considered to be for the crop.

(b) When the AIP determines that the compensation for harvest and/or transportation as allowed in (1) above is excessive (i.e., not reflective of the associated costs) and/or that part of the compensation is for the crop, the AIP will consider the compensation received to be for the crop.

(3) Do the following when compensation received for the gleaned crop is considered to be for the crop:

(a) If the claim has already been processed, a corrected claim will be prepared for the types of claims described in the above subparagraphs B(1), B(3), C(2) and C(3). The harvested production will be used as PTC. In cases where production records are not available, the amount received for gleaning will be divided by the elected price election to determine PTC.

For dollar amount crops, the dollar amount received will be used to determine the amount of production or value to count.

(b) For the types of claims described in above subparagraphs B(2) and C(1); the claim will not be corrected.

E. Gleaning Codes for the Production Worksheet

In the "Intended Use" column on the PW (for most crops), code acreage that is released to be gleaned as shown in the table below:

Gleaning Code...	Use When...
"HG" Harvested Gleaned	it is the type of claims described in paragraph B above.
"UG" Unharvested Gleaned	it is the type of claims described in paragraph C above.

F. Certification of Gleaning

(1) For the type of claim described in above subparagraph C(2), the certification on the Certification Form as required in subparagraph 921D(8) is still required except the statement must be modified as follows:

"As indicated by the insured's signature below, the insured certifies that the damaged acreage that cannot be mechanically harvested with normal harvest equipment will not be harvested and if the acreage is gleaned it will be gleaned by the organization shown in the Narrative of the PW (or other USDA approved charitable organizations) and the insured will not receive any compensation from the organization. If the insured harvests the crop after this certification or receives compensation from the charitable organization, the insured understands he/she may be subject to the misrepresentation provisions in the crop insurance policy."

(2) For the type of claim described in above subparagraph B(3) and C(3):

Before a claim can be finalized, the AIP must receive a completed Certification Form from the insured showing the insured's certification of the name and address of the approved charitable organization that gleaned the acreage and/or production released for gleaning, that all such acreage and production was gleaned, and that the insured received no compensation from the charitable organization. Refer to the paragraph 831 for procedures regarding the Certification Form.

When the entire production is not gleaned on any acreage as indicated by the insured on the Certification Form, then the adjuster must make a farm visit to verify that the balance of the production has been destroyed or a completed Certification Form must be signed for destruction of the balance of the production.

905-920 (Reserved)

921 General Information

A. Performing Appraisals

(1) If during an inspection any crop acreage is not going to be carried to harvest and an accurate appraisal of potential production cannot be made, do not release acreage to another use or to replant when replant payment is applicable until an accurate appraisal can be made or RSAs are left for later appraisals as described in subparagraph B below and paragraph 924.

(2) If the inspection is performed at a time when production can be determined accurately by appraisal and the crop is not being carried to harvest (except when Pre-harvest Appraisals are required), appraise the production by unit, and grant written consent to put insured acreage to another use. Record this production on an appraisal worksheet and a Special Report, if needed. Refer to applicable crop LASHs for appraisal methods.

(3) Perform appraisals when:

(a) The insured requests consent to put acreage to another use or to replant to the same crop originally planted if a replant payment will be claimed.

(b) The insured chooses not to harvest all of the acreage.

(c) The insured plans to use a crop in such a way that it will not be possible to determine production after harvest. Some examples, but not limited to, are:

(i) High-moisture grain that will be mechanically packed in an open pit;

(ii) A crop insured as grain (e.g., grain sorghum or corn) that will be partially or all cut for silage;

(iii) Corn that will be cut and ground for corn and cob meal or cut for earlage. Earlage is high moisture corn grain, cobs, husks, and in some cases, a portion of the stalk that is cut and ensiled; and

(iv) Silage that will be packed in ag bags. This is because there are no acceptable measurement calculation formulas to determine the amount of silage packed in ag bags.

(v) Forage stored in ag bags that have a diameter greater than the maximum diameter of horizontal plastic tubes listed in the Forage LASH. This is because there are no acceptable measurement formulas to determine the amount of forage packed in these larger diameter ag bags.

A. Performing Appraisals (continued)

(d) In the situations listed in (3)(c)(i)-(v) above, if a pre-harvest appraisal is not done before the crop is utilized in a manner that does not allow an accurate determination of the amount of production, the full guarantee must be assessed on any acreage from which this production was harvested.

(e) The crop will be stored in such a manner that production cannot be measured, (e.g., high-moisture corn or silage stored in an airtight structure). If a pre-harvest appraisal is not done to determine the PTC, the claim must be denied because the insured does not have verifiable records of the stored production in the absence of the AIP being able to verify the actual harvested production in the structure by measuring the production in the structure.

(f) The insurance period ends for a crop. The appraisal will establish the potential production of the UH acreage at the time the insurance period ceases.

(g) Late-filed acreage is requested or unreported acreage is discovered (to determine acceptance or rejection of such acreage).

(h) An unreported unit (not reported on the AR) is discovered, and it is suspected or known that it will not be harvested or harvested and stored in such a manner that production cannot be accounted for. Refer to paragraph 1234 for more information on unreported units.

(i) The insured insists on replanting, but it is determined it is too late to replant. Refer to part 7, section 2 for more information.

(j) When the insured notifies the AIP that production is going to be stored in an oversized storage structure (a size larger than used in normal farming operations, such as commercial sized structures), the AIP may choose to do a pre-harvest appraisal to determine the PTC for the units of production that will be stored in the structure rather than determining the PTC after the production is put into the storage structure, provided the insured agrees to this. If the AIP does not perform a pre-harvest appraisal, the production stored in such a structure must be measured. Also, refer to paragraph 1002.

(k) Uninsured causes of loss are determined if acreage is destroyed without consent, abandoned, or if the insured has failed to provide production records that are acceptable. Acreage damaged solely from uninsured causes or if any of the other aforementioned reasons exist in this item, not less than the per-acre production guarantee for the acreage involved will be assessed.

(l) The definition for abandon in the BP indicates that when the crop is not timely harvested, it is abandoned; however, exercise good judgment in establishing that a crop that has not been timely harvested is truly abandoned. Refer to paragraph 844.

A. Performing Appraisals (continued)

(m) An UH portion of the insured field or subfield (or orchard or sub-orchard, etc.) remains after harvest or production that could have been removed from a harvested insured field or subfield (or orchard or sub-orchard, etc.) that was not removed due to improperly functioning harvesting equipment, windrows of crop not all picked up; cherry picking (refer to definition in the GSH) an orchard, etc.

Note: This does not include UH RSA of the crop the insured has left in accordance with policy requirements, unless the areas represent a significant portion of the acreage. Refer to subparagraph 702A(5)(b).

(n) If the CP, SP, or a WA authorizes direct marketing, conduct an appraisal within the timeframe stated in the applicable policy that will be used to determine PTC for production that will be sold by direct marketing.

(4) When appraisals are made, the AIP will inform the insured of the following:

(a) The method used to determine potential production and how the appraisal will be used if an indemnity is claimed. If at all possible, the insured or an authorized representative of the insured should accompany you on the entire appraisal. Encourage the insured or authorized representative to participate in determining the appraisal.

(b) Appraisals on acreage for which the AIP has given consent to be put to another use are final when the claim is signed by the insured or insured's authorized representative and the adjuster, unless such acreage is:

(i) not put to another use before harvest becomes general in the county and is reappraised by the AIP,

(ii) further damaged by an insured cause and is reappraised by the AIP, or

(iii) harvested.

Note: Do not finalize a claim until satisfied with all determinations. Refer to subparagraph 702(8).

(5) Do not advise the insured whether or not to harvest the crop.

(6) Approved appraisal methods are identified in the individual crop LASH.

(7) If an insured notifies the AIP of additional damage after consent to put acreage to other use and requests a re-inspection, a new appraisal may be made provided the additional damage was due to an insured COL and the acreage has not been put to another use.

A. Performing Appraisals (continued)

(8) If it is known a certain part of a field will be or will probably be planted to a second crop, sub-divide the field into the area that will be planted to a second crop and that which will not. Use the number of samples required by the applicable LASH based on the number of acres in the subfield.

(9) All acreage that has zero appraisals or areas of non-emerged seed in the field (not just skips of non-emerged seed between emerged seed), regardless of the reason of the zero appraisal (e.g., unable to mechanically harvest as stated in subparagraph D, no potential production is on the plants, etc.), must be thoroughly documented with a completed appraisal form as instructed in the LASHs, along with photographs, and/or videos of such acreage. When the reason for the zero appraisal is non-emerged seed, the adjuster must verify that the crop seed was initially planted through visual subsoil inspection. Refer to paragraph 202 for instructions on proper documentation of the photos or videos.

B. Deferred Appraisals

(1) Defer appraisals until the adjuster can accurately appraise potential production.

(2) Defer appraisals when:

(a) Hail damage or damage from blowing sand has occurred on immature crops. Defer appraisals 7-10 days from the date damage occurred, unless specified otherwise by agricultural experts in the area for the crop or as otherwise specified in the individual crop LASH. If agricultural experts in the area specify less days are needed to determine damage to the particular crop, written documentation of this must be retained in the insured's loss file; i.e., name of agricultural expert, date, written statement from the agricultural expert specifying the number of days to defer appraisal, etc.

(b) Frost/freeze damage has occurred on an immature crop. Defer appraisals at least 7-10 days from the date of frost/freeze, unless specified otherwise by agricultural experts in the area for the crop or as otherwise specified in the individual crop LASH. If agricultural experts in the area specify less days are needed to determine damage to the particular crop, written documentation of this must be retained in the insured's loss file; i.e., name of agricultural expert, date, written statement from the agricultural expert specifying the number of days to defer appraisal, etc.

(c) Defer appraisal until at least the time the crop is out of dormancy.

B. Deferred Appraisals (continued)

(d) For spring-seeded crops where insufficient soil moisture has affected seed emergence and the insured requests acreage to go to another use, appraisals must be deferred until at least 8 days after the LPP (15 days after the FPD if no LPP applies.) None of the acreage in the field(s) can be released until the appraisals are completed. The seed must have been planted at least 15 days prior to release for a final indemnity. Use the stand reduction appraisal method.

Example: The FPD for the crop is May 31. There is a 25 day LPP (June 1 through June 25). The crop is planted on June 17. With the 8 day deferral period (June 26 through July 3), appraisal can be made beginning on July 4.

(3) Defer appraisals anytime a more accurate appraisal can be made at a later date due to type of damage or circumstances; e.g., extent of damage or recovery of crop after flooding, pollination problems, freeze, etc.

(4) Utilize agricultural experts for the crop for the length of time appraisals should be deferred for the particular crop and situation. Include a copy of these recommendations with the paperwork pertaining to the inspection to support the AIP's actions.

(5) Unless specified elsewhere (as in (2)(d) above), the deferred appraisal may be made from RSAs (as specified in paragraph 924) when (a) or (b) below are applicable and provided the insured agrees to leave and maintain the RSAs as described in paragraph 924.

(a) The insured needs immediate release of the crop acreage in order to put the acreage to another use or to replant it; or

(b) Due to heavy workload the AIP has no adjusters available to make a field inspection to release the acreage within the timeframe needed to replant it or put the acreage to another use (such as planting to another crop).

(6) In widespread deferral situations, all AIPs should maintain coordination through RMA's Insurance Services so that uniform guidance can be provided to all AIPs regarding the length of deferral time necessary to allow accurate appraisals to be made for the circumstances.

C. Harvested Representative Sample Appraisals

Refer to the individual crop LASH for exceptions to the following procedure:

(1) Appraise mature production by arranging with the insured to harvest representative areas, if possible. The representative areas are selected by the adjuster, harvested, and appraised at the same time rather than being appraised at a later date, as discussed in paragraph 924. Adjusters can use subparagraph 924B(1)(a) as a guide for the number and location of representative areas. Adjusters must be present when the representative areas are harvested, and the harvested production from these areas will be used to determine the UH appraised yield per acre.

(2) Record the appraised yield per acre in Section I of the column entitled "Appraised Potential" of the PW, as "UH" stage for the number of acres of UH acres this appraisal represents; e.g., if the appraisal from the harvested representative samples represents an appraisal for 80 acres, the stage code for the 80 acres is "UH," not "H." Or, the PW may show the actual acreage harvested with an "H" stage code; e.g., 80 acres were to be appraised, and out of the 80 acres, the insured harvested 1.0 acre for appraisal purposes, the PW could be completed showing 79.0 acres with "UH" stage code, and 1.0 acre with "H" stage code.

D. Unable to Mechanically Harvest

(1) When crop acreage which is routinely mechanically harvested is damaged or inaccessible due to an insured cause(s) to the extent that it can never be mechanically harvested with normal harvest methods/equipment, no production will be counted for such acreage. If mechanical harvest is feasible with normal harvest methods/equipment on any portion of the UH acreage, appraise and count only the production that you determine could have been mechanically harvested. However, if the insured elects to hand harvest, such as handpick corn, or use specialized harvesting methods/equipment, the harvested production will be counted.

(2) Wet field conditions, snow covered fields, or inaccessible roads/bridges that prevent harvest of the crop by the EOIP does not mean it can never be mechanically harvested with normal harvest methods/equipment. This may only be a temporary condition. Likewise, the fact that it would cost more to harvest the crop than the crop is worth does not constitute that the insured is unable to mechanically harvest the crop.

D. Unable to Mechanically Harvest (continued)

(3) Examples of insured causes that could result in the insured being unable to mechanically harvest the crop. Hurricane, tropical depression, or tornado damage has rendered the crop unharvestable/inaccessible with normal harvesting methods/equipment or small grain that has been drought-stressed may be so short that it cannot be mechanically harvested with the normal harvest methods/equipment in the area. For grain height too short to harvest with normal harvesting methods/equipment, the adjuster must establish and document the individual cutting height based on the terrain (rocky soil, level field, terraces, slopes, etc.) and the insured's farming practices (type of harvesting methods/equipment, swathed grain, etc.). Remember, insureds employing GFPs will lower the combine headers or swather bars to recover a short crop to the maximum extent possible.

(4) Determine (on an individual basis) whether any portion of the acreage can ever be mechanically harvested with normal harvest methods/equipment and if the reason is due to an insured cause. Consider what other insured and noninsured growers in the area are doing with the same crop, similar soil and terrain, or equipment (whether owned or otherwise available to the insured).

(5) Determine whether the insured made every reasonable effort to harvest such acreage with normal harvesting methods/equipment or whether the insured plans to hand harvest or use specialized harvesting equipment. For example, if the producer has to drive out of the way to reach the acreage, then the producer would be expected to harvest the crop.

(6) If it is difficult to determine what potential is machine harvestable, arrange with the insured to harvest representative areas of the crop. Use this production to determine the PTC.

(7) Document your determinations that the crop cannot be mechanically harvested including documentation requirements shown in subparagraph A(9). Photographs or videos showing the condition of the crop, terrain, etc., are a necessary part of the documentation to support determinations of zero ("0") appraisals which are made under these procedures.

(8) If it is determined the insured crop cannot be harvested with normal harvesting methods/equipment, or only a portion of the production can be harvested with normal harvesting methods/equipment, and the insured does not elect to hand pick or use specialized harvesting methods/equipment, a Certification Form must be signed by the insured. Provide a copy to the insured and attach the original signed Certification Form to the claim. Refer to paragraph 831 and exhibit 7 for more information on the use of a Certification Form.

922 Appraisal Method Modifications & Deviations

A. Modifications

The AIP's authorizing official may authorize the use of any appraisal modifications listed in the LASHs without prior approval from RMA. However, the use of the modification cannot begin until the AIP has notified RMA's RMSD. AIP's are to notify RMSD via e-mail at RMA.RMSD@usda.gov and provide the following in the e-mail: A copy of the written authorization stating the modification, documentation of the field condition that warrants an appraisal modification, effective crop year, area affected, and effective beginning and ending dates. RMSD will then in turn notify other AIPs, RMA PASD, RMA Risk Compliance, and the affected RMA ROs and CFOs.

B. Deviations

(1) Appraisal deviations require the RMA's written authorization after receiving approval from RMA's PASD and/or RMSD and consist of deviations that are necessary to apply to the standard appraisal method in order to provide an accurate determination of crop potential under the circumstances.

(2) The AIP will immediately notify RMA's PASD and/or RMSD of the situation with a recommendation and justification, before proceeding. Notify RMSD via e-mail at RMA.RMSD@usda.gov and PASD at RMA.LAM@usda.gov with the following: the deviation recommended, the effective crop year, area affected, and beginning and ending dates for which the deviation is to be applied.

(3) RMSD will:

(a) Immediately advise the affected RMA RO of the situation;
(b) Coordinate the recommendation with the appropriate AIPs; and
(c) Assess the need for and impact of the deviation.

(4) Upon receiving written authorization from RMA, the AIP will issue written authorization to use the approved deviation and ensure the proper implementation and monitoring of the deviation.

923 Appraisals Involving Average Row-width Measurements

When appraisal instructions in a specific crop LASH require an average row-width measurement to be used in determining sample selections and where rows are skipped to form a skip-row planting pattern or for tractor and planter tires (except for cotton, use the respective cotton handbook instructions for skip-row patterns), determine the "average row width" as follows:

(1) Measure across one entire pattern;
(2) Count the number of planted rows; and
(3) Divide the total distance measured by the number of rows measured across.

Example:

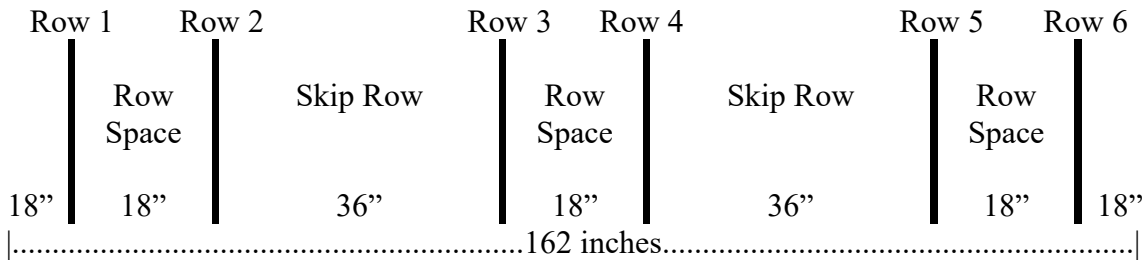

162 inches ÷ 6 rows = 27 in. average row width

For other types of row-width measurement instructions, refer to the individual crop LASH.

924 Representative Sample Area Appraisals

Do not confuse procedures in this subparagraph with section 14(c) of the BP and subparagraph 902B. Subparagraph 902B requires the insured to leave RSCs of the UH crop if the insured reports damage less than 15 days before the time the insured begins harvest or during harvest.

A. General Information

(1) RSAs are areas of a field that the AIP authorizes the insured to leave when the insured wants immediate release of the field to go to another use, replant, etc., but the appraisal cannot be made at this time for one of the reasons stated in item (3). Appraisals from the RSAs of the UH crop acreage is made at a later date to determine the per-acre appraisal for the entire UH acreage.

(2) If the insured put acreage to another use and left RSAs prior to notifying and receiving approval from the AIP to put the acreage to another use and to leave RSAs, the acreage put to another use is considered destroyed without consent, and the AIP must assess an uninsured cause appraisal of at least the per-acre guarantee for such acreage. There are no exceptions for not assessing an uninsured cause for at least the per-acre guarantee in this situation.

(3) RSAs are used when any of the following apply:

(a) Heavy workload situations exist and timing is critical to give consent to put acreage to other use or replant.

(b) Deferred appraisals are required, as stated in subparagraph 921B and the insured desires immediate release of the acreage in order to put acreage to another use or to replant acreage.

A. General Information (continued)

(c) Insured's disagreement with the initial appraisal of the acreage to be released, and the AIP agrees to allow the insured to leave RSAs, as described herein. When this is done, some CPs state that the RSAs must be left and properly cared for until the crop has matured. However, if the AIP determines there is no insured COL present when the producer requests acreage to be released to be put to another use (e.g., grazing), then no deferred appraisal will be allowed. The insured must decide whether to take the appraisal, carry the crop to harvest, or in the case of short-rated wheat or barley, take the short rate and graze or destroy the acreage by mechanical means as stated in the SP.

(d) Such sample areas are otherwise required by the policy (e.g., for grain deficient corn.

(4) Before AIPs can authorize insureds to leave RSAs of production for appraisal purposes, the AIP must have received the insured's agreement to the items in B(1)-(2). The agreement must be:

(a) In writing for immature production (except the agreement may be a verbal agreement when the insured is requesting to replant acreage and item (6) below applies).

(b) Either verbally or in writing for mature production. However, if the adjuster selects the RSAs while on the first on-the-farm inspection, the agreement in writing must be obtained. Corn insured as grain to be cut for silage can be considered mature production for the purpose of granting the insured authorization to leave RSAs.

(5) The adjuster must select the RSAs during the adjuster's first on-the-farm inspection of the field(s) to be released, unless there is an exception, as outlined in item (6) below.

(6) Exception to adjuster's first on-the-farm inspection is to be authorized only when there is a heavy workload and the insured cannot afford to wait until the time an adjuster can make an on-the-farm inspection to make appraisals before the insured can replant or put the acreage to another use or crop. AIPs must not authorize this exception on a routine basis and are not to authorize this exception unless there is a known COL in the area that could have damaged the crop acreage. If there is not a known COL, an adjuster must make an on-the-farm inspection.

(a) After the insured has agreed (verbally or in writing as stated in item (4) above) to all the criteria in subparagraph B(1) below, the AIPs on an insured-by-insured basis may authorize the insured verbally to leave RSAs and to authorize the insured to:

(i) Replant damaged acreage or
(ii) Take acreage of crop production (immature or mature) to another use.

A. General Information (continued)

(b) Authorization shall only be provided by individuals authorized by the AIP to do so. AIPs cannot authorize sales agents, agency employees, or sales supervisors to provide this authorization to the insured.

(7) For first on-the-farm inspection, adjusters must:

(a) Select the RSAs in accordance with subparagraphs B(1)(a) and C. Identify for the insured the selected RSAs by flags, physical markings, or sketch maps to protect the integrity of the RSAs. In all cases, document the location of the selected RSAs in the field(s) on an aerial photo or on a sketch map and the agreed upon fencing or protective barrier that the insured intends to use.

(b) Explain to the insured all items in the insured's agreement, as shown in subparagraph B(1)-(2), and the consequences if the insured failed to meet these requirements as explained in subparagraph B(2).

(c) Provide the insured a copy of the agreement as stated in subparagraph B(4). Leave the original in the insured's file folder.

B. Insured's Agreement

(1) The insured must agree to the following:

(a) To leave at least the minimum number of RSAs (as stated below) of the minimum size and specified locations, per field, as stated in subparagraph C;

Minimum Number of Representative Sample Areas Table	
Acres in Field or Subfield	Minimum Number of RSAs
.1-10.0	1
One additional RSA is required for each additional 40.0 acres (or fraction thereof) in field or subfield.	

(b) To not move the selected RSAs;

(c) To locate the RSAs in representative areas of the field with the beginning side of the RSA not less than 20 feet from the edge of the field;

Example: RSAs (10 ft. wide, length of field). RSA on the left is the 20 ft. minimum an RSA can begin from the edge of the field. The RSA on the right is greater than the 20 ft. minimum the RSA can begin from the edge of field.

B. Insured's Agreement (continued)

↔	↔		↔	↔
20 ft. from edge of field	RSA 10 ft.	20 acre field (Not to Scale)	RSA 10 ft.	40 ft. from edge of field

Exception: If in the case of contour or strip farming (subparagraph C(1)(a)), the minimum 20 ft. that the RSA can begin from the edge of the field is not practical because of the narrow width of the strip or contour, the AIP may allow less than the 20 ft. minimum, with proper documentation.

(d) To care for the RSAs in the same manner as if they were to be harvested and this care must continue until the areas are appraised;

(e) When released acreage is to be grazed, to protect the RSAs from livestock by fencing or an equally effective barrier that is acceptable to the AIP. The fencing or effective barriers must remain in place until completion of the appraisal; and

(f) That production for the acreage released will be determined from appraisals from the RSAs (without adjustments for quality if at the time the crop acreage is released, the crop is immature) unless the insured fails to comply with the agreement.

(2) In addition to the items in (1) above, the agreement must also contain:

(a) The consequences if the insured fails to comply with the agreement and the reason RSA are established is:

(i) other than the AIP allowing the insured to leave RSAs because the insured disagrees with the initial appraisal:

(A) If the insured fails to meet the criteria in item (1)(a)-(e), then an uninsured cause appraisal of at least per-acre guarantee of the crop released will be assessed.

(B) If the insured satisfies the requirement for the location of minimum number of samples in item (1)(c) above, but fails to leave an RSA or RSAs the minimum size as stated in subparagraph C, (e.g., the RSA did not extend the entire length of the field as required in item C(1)(b)(i)(A), then an uninsured cause appraisal of up to at least the per-acre guarantee of the crop released will be assessed.

(ii) because the AIP allowed the insured to leave RSAs due to the insured disagreeing with the initial appraisal, then the initial appraisal will be used.

B. Insured's Agreement (continued)

(b) If the acreage is released for grazing, the type of fencing or other effective barrier with which the insured agrees to surround the RSA until the completion of the appraisal has taken place;

(c) The locations and size of the RSAs to be left in each field either on a sketch map or aerial photos;

(d) The signature and adjuster code number of adjuster authorizing the agreement.

(e) The date the adjuster released the acreage and authorized the RSAs.

(f) Phone number(s) of adjuster (or adjuster's claim supervisor) that the insured can easily reach if they have questions regarding the preparation and maintenance of the RSAs;

(g) If the insured is allowed to leave RSAs without the adjuster physically selecting the RSAs during an on-the-farm visit, as allowed in subparagraph E, and a signed agreement is still required (i.e., immature production), follow these instructions for signatures:

(i) Signed Agreement via e-mail.

(A) Insured (or insured's representative) is to type his/her name in the signature block followed by "signed via e-mail" (e.g., John Jones signed via e-mail) and fill in the date signed.

(B) Instruct the insured (or insured's representative) after he/she has filled out the signature block to save the document and e-mail back to the e-mail address provided by the adjuster.

(C) If the adjuster is in agreement with the signed version the insured (or insured's representative) has e-mailed back, the adjuster will fill in the signature, signature date, and adjuster's assigned code number, save, and e-mail this version back to the insured. Refer to (4) below for instructions regarding insured's and AIP's copies.

(ii) Insured signs and dates in signature block and faxes back to the fax number provided by the adjuster. If the adjuster agrees with the information the insured has provided on the form, he/she signs, dates, and enters his/her assigned adjuster code and faxes or mails back to the insured. If the adjuster is sending the approved copy to the insured via U.S. Postal Service, notify the insured of the approval via e-mail or telephone, and that the signed hard copy of the agreement will follow. Refer to (4) below for instructions regarding insured's and AIP's copies.

B. Insured's Agreement (continued)

(3) When the exception in subparagraph A(6) applies because of workload and verbal agreements are executed as allowed in subparagraph A(4), the adjuster must document the following information and retain in the insured's file folder:

(a) The insured's verbal agreement to the items for which the insured must agree and any information required to be provided to the adjuster,

(b) The insured's understanding of the consequences (stated in item (2)(a) above) if the insured should fail to comply with the items in item (1) above,

(c) The reason for the immediacy of the release,

(d) Authorization method (by phone, fax, etc.),

(e) Date the adjuster released acreage and authorized insured to leave RSAs, and

(f) The signature and code number of the adjuster providing the authorization.

(4) When an agreement in writing is done, provide the insured with a written copy of the agreement in writing (including any attachments and e-mails) signed by the insured and AIP representative, and leave the original in the insured's file folder.

(5) When a verbal agreement is done, provide (via mail, e-mail or fax) the insured with a copy of the information to which the insured agreed, as well as the information provided to the adjuster.

C. Required Size and Location of RSAs

Unless stated otherwise in an individual crop LASH, the size and location of RSAs for all crops except perennial crops are stated below. For perennial crops, use the instructions in the respective perennial crop LASH.

(1) Select at least the minimum number of representative RSAs of the crop (per field) as required in subparagraph B(1)(a) and that:

(a) The beginning side of each RSA is located not less than 20 feet from the edge of the field and RSAs are representative of the acreage to be appraised. Refer to subparagraph B(1)(c);

(b) Are at least the size described in (i) below:

C. Required Size and Location of RSAs (continued)

(i) Each RSA is a strip that follows the entire length of the field and that is at least 10 feet wide. The RSA must be wide enough to ensure that the potential appraisal areas from which the appraisal will be extracted will not be exposed to damage in excess of what would be experienced had the crop around the RSAs remained intact (e.g., excessive drying, insect, or weed infestation, grazing, etc.). Appraisal samples must not be taken in the same area within the RSA; move down or up the strip for each sample.

(A) If acreage is in a center pivot, use (ii) below so that irrigation can continue without wasting irrigation water or power to operate the equipment; i.e., the RSA is as wide as the irrigation boom so it will allow an ample RSA without wasting irrigation water or power as would happen if a 10 foot strip following the entire circumference of the circle was IRR.

(B) When acreage has been released for grazing and the only access the livestock has to a permanent structure containing water (e.g., pond, lake, etc.) is through the field, a small break (no more than a 30-foot break) in the length of the RSA may be left for the livestock to pass through, provided the ends of the break are also fenced.

(ii) The width and length of each separate RSA must accumulatively reflect the minimum size stated in (1)(b)(i) above (i.e., the square feet of each RSA is equivalent to the square feet of 10 feet wide X length of field). Each RSA must be:

(A) Wide enough to accommodate the equipment that will be used to maintain the crop (i.e., sprayer with a 30-foot boom, six- row cultivator, etc.) with the equipment used to care for the crop up to the time the crop would be appraised; and

(B) Large enough to ensure that all sides of the potential areas from which the appraisal will be extracted will not be exposed to damage in excess of what would be experienced had the crop around the RSAs remained intact (e.g., excessive drying, insect or weed infestation, grazing, etc.).

C. Required Size and Location of RSAs (continued)

Example: A 125.7-acre center pivot irrigation circle would require 4 RSAs (1 RSA for the first 10 acres and an additional RSA for each additional 40.0 acres for a total of 4 RSA's) which could be combined into a single RSA that is a pie shaped area contained within the center pivot circle. Assume the diameter of the irrigation circle is 2,640 ft. The RSA must be equivalent to an area that is at least 10ft wide and the entire length of the field (10.0 ft. x 2,640 ft. = 26,400 sq. ft. in each RSA). 26,400 sq. ft. divided by 43,560 sq. ft. in an acre = 0.6 of an acre occupied by for each RSA. Using 4 RSAs requires an area equal to 2.4 acres for the combined RSA (0.6-acre x 4 RSAs). This combined RSA will be located within the pivot irrigation circle extending from the center of the pivot irrigation circle to the outer edge of the circle forming a pie shaped area.

Determine the size of the pie shaped area as follows:

2.4 acres x 43,560 sq. ft./acre = 104,544 sq. ft.

The radius of the circle is 1,320 ft. (2,640/2)

Area of a triangle = (Base x Height) ÷ 2

$$\frac{\text{Base x 1,320}}{2} = 104{,}544 \text{ sq. ft.}$$

To determine the base:
104,544 x 2 = 209,088 ÷ 1,320 = 158.4 width of the base

The base of the pie shape (along the outer edge of the center pivot circle) will be 158.4 ft.

To verify the calculations:

$$\frac{\text{158.4 ft. x 1,320 ft.}}{2} = 104{,}544 \text{ sq. ft.}$$

104,544 sq. ft. ÷ 43,560 sq. ft. / acre = 2.4 acres

C. Required Size and Location of RSAs (continued)

(c) Will enable, at least, the minimum recommended number of samples stated in the crop LASH to be selected on a proportional basis to the acreage represented. Refer to example below for an explanation of what samples to be selected on a proportional basis means.

Example: The minimum RSAs required are five for the acreage being appraised. The adjuster has determined that splitting the field into subfields is inappropriate because although one-third of the field is in uniformly satisfactory condition and two-thirds of the field is in uniformly poor condition, the respective portions are randomly scattered across the field. To maintain the proper proportionate sampling as it relates to damage, six RSAs are to be utilized instead of five, two in the satisfactory areas and four in the poor areas. The number of samples to maintain a proportionate sampling may be taken from less than six RSAs if four samples of the sample size stated in the appropriate handbook can be obtained in the poor areas and two from the satisfactory areas.

D. Appraisals of RSAs

(1) When the adjuster performs the on-the-farm inspection to conduct the appraisal, the adjuster must verify that the insured has complied with the agreed upon provisions, as described above. If the insured has failed to comply with any of the criteria outlined in subparagraph B(1)(a) - (e), apply the applicable appraisal as stated in subparagraph B(2)(a).

(2) Samples must not be taken in the same area within the RSA and must not be taken on the outer edges of the RSA.

(3) RSAs of immature production left for deferred appraisals solely for the initial appraisal of released acreage:

(a) Appraisals must be completed as soon as the PTC can be accurately determined (no earlier than 7-10 days after damage due to hail or frost/freeze, or the number of days specified by an agricultural expert if it differs from the 7-10 days.

(b) The following is not applicable to crops having stages:

(i) At the time the RSAs are appraised, any production damage due to an insured cause that has occurred must be considered, including losses due to revenue (if applicable for the crop), but not quality for the acreage released.

D. Appraisals of RSAs (continued)

(ii) There would be very few circumstances that would justify allowing the crop in the RSAs to become fully mature prior to completing the appraisal. If there was a justifiable reason to allow the crop in the RSAs to become fully mature prior to completing the appraisal:

(A) Document the reason why the crop was allowed to become fully mature and keep a copy in the insured's loss file.

(B) If there was quality damage to the crop in the RSAs, quality adjustment of appraised or harvested production from the acreage in the RSAs can be applied but cannot be applied to the appraised production for the released acreage.

(4) RSAs of corn insured as silage are established to determine grain deficient silage when appraisals cannot be made (due to AIP workload) before harvesting as silage.

Appraise these areas as soon as possible. Additional production damage after the date the corn was harvested as silage will not be considered an insured COL even if the damage was from a named peril in the policy. This is because the crop was harvested for the use for which it was insured (silage), and the insurance period ended at the time the crop was harvested; i.e., the corn was cut for silage. The appraisal of the RSAs will determine whether the corn met the criteria for grain-deficient silage. If the silage was put in an airtight structure, the RSAs can also be used to determine the PTC. Apply uninsured cause appraisals as if RSAs were not properly cared for in accordance with subparagraph B(2)(a), and for any damage that occurred after the corn was harvested as silage.

(5) RSAs established solely because insured disagreed with initial appraisal of immature crop acreage to be released:

Several CP, including canola, coarse grains, cotton, dry beans, ELS cotton, small grains, sugar beets, and sunflower seed CP state that when the insured disagrees with the initial appraisal of the crop acreage the insured wishes to be released, the AIP may agree to release the acreage and use RSAs for appraisal purposes. The appraisal of the RSAs will be deferred until the time harvest would have occurred.

(a) If the insured has complied with the criteria outlined in subparagraph B(1)(a)-(e):

(i) Any additional production damage to the RSAs due to a named peril in the policy will be considered an insured COL, including revenue losses. However, damage due to quality will only be allowed as stated in (ii) below.

D. Appraisals of RSAs (continued)

(ii) The per-acre production appraisal will be used for all the acreage released, including RSAs. Adjustments for quality cannot be applied to the appraised production for the released acreage. However, adjustments for quality can be applied to the amount of mature production specifically from the RSAs since the RSAs have to be left intact until harvest time. If this is applicable, a two-line entry is required on the PW; i.e., one line for the acreage of the released acreage and one line for the acreage of the RSAs.

(b) If the insured did not comply with the criteria outlined in subparagraph B(1)(a)-(e):

(i) Use the initial per-acre production appraisal (without adjustments for quality) made prior to giving consent to put the acreage to another use.

(ii) Apply this per-acre production appraisal (without adjustments for quality) to all of the released acreage as well as the acreage in the RSAs.

(6) RSAs of a mature crop for initial appraisal when insured requests release of acreage to put to other use or crop, and due to heavy workload, the AIP cannot appraise the acreage prior to the time the acreage needs to be released.

(a) AIPs are to allow RSAs for this use prudently. This procedure is only to be used when for the other use to which the insured wishes to put the crop or acreage, it is essential the acreage is released prior to the time the AIP can appraise the acreage. The insured still must agree to all of the criteria in subparagraph 924B above before RSAs can be used.

(b) Appraise the RSAs as soon as possible. If the insured has complied with the criteria in subparagraph B(1)(a)-(e), the per-acre appraisal from the harvested production will be used. Since the crop was mature at the time the RSAs were established, quality can be applied. If the insured did not comply with the criteria in subparagraph B(1)(a) - (e), then follow the procedures in subparagraph B(2)(a).

925-930 (Reserved)

Section 3 Verifying Production

931 Verifying Harvested Production

(1) Harvested production will be verified or determined by the following:

(a) Acceptable evidence of third party sales and/or commercial storage.

(b) Measuring farm-stored harvested production (refer to paragraph 1001).

(c) Comparing harvested production to appraisals made from the UH areas of the fields left under the terms of the policy when the amount of reported harvested production is questionable.

(d) Comparing reported production to appraisals and production in the area when there is reason to question the reported harvested production.

(e) Weighed and farm-stored records. Refer to paragraph 1002. Insured's records from prior years weighed and stored production cannot be used.

(f) Verifiable farm management records from producers using PFTS.

(g) If the insured claims the entire unit has been harvested, verify that all fields and areas of the field (orchards or vineyards, if applicable) have been harvested. Also, verify that all of the production that could be harvested has been harvested (i.e., if only the best acreage or best fruit (cherry picked) from the trees or vines has been harvested, the remaining UH crop must be considered PTC unless such crop is not considered PTC in accordance with subparagraph 921D) in accordance with procedures in the respective crop LASH, CP, or SP.

(h) When an insured is vertically integrated and cannot provide records of production from a disinterested third party, the production evidence listed in the CIH can be submitted as acceptable production records.

(2) Do not rely solely on statements or evidence of sales to represent all of the production. Review all production evidence closely when the insured controls the transportation (e.g., trucking or handling company); manufacturing (processing plant); farm scales; or sales (warehouse) of a particular crop. If there is evidence that suggests the insured has misrepresented production, do not (adjuster) sign the claim. Notify the AIP of the situation.

(3) Acceptable PFTS used to establish records for total production must include at least the following components:

(a) GPS technology integrated with planter monitors, combine monitors, yield mapping software;

(b) The capability of producing summary reports that reflect planted acres, harvested acres, and harvested production; and

(c) Report of calibrations performed per manufacturer's requirements.

(4) The AIP must inform the insured in writing of the PFTS record requirements prior to harvest.

(5) Production records from PFTS may be used in lieu of settlement sheets and bin measurements provided all of the requirements under item (7) are met.

(6) The insured should be advised to maintain alternate acceptable production records by unit in the event the PFTS production records are determined to be unacceptable.

(7) For the PFTS production records to be acceptable, the insured must provide the following information:

(a) Calibration of the automated yield monitoring system.

(i) The insured must have calibrated the yield monitoring system at the beginning of harvest for each insured crop and crop year, in accordance with the operator's manual specifications. The sensor calibrations must not exceed three percent (3%) when compared to the actual weighed production harvested from the acreage used to calibrate the sensor. Refer to subparagraph 1002B (Acceptable Scale Types). If the initial sensor calibration difference exceeds three percent (3%) when compared to the actual weighed production harvested from the acreage used to calibrate the sensor, additional calibration samples may be taken until the results are within tolerance.

Note: This includes yield monitoring systems capable of self-calibrating. For crop insurance purposes, self-calibrating yield monitoring systems must be compared to actual weighed production harvested from the acreage at the beginning of harvest for each insured crop and crop year.

(ii) If after calibrating the yield monitoring system as stated in (i) above, the sensor calibrations for the crop and crop year:

(A) still exceed three percent (3%) when compared to the actual production harvested from the acreage used to calibrate the sensor, the PFTS records will not be considered acceptable as stand-alone production evidence but may be used like load records. Post-harvest calibration of yield maps is not acceptable. The insured must provide documentation of the actual production based on acceptable production records.

(B) are within three percent (3%) using production harvested from the acreage used to calibrate the sensor, and the insured wants to make additional calibrations throughout harvest due to changes in crop or field conditions. Additional calibrations are allowed, provided the revised calibrations are still within three percent (3%) of the actual weighed production harvested from the acreage used to calibrate the sensor.

(C) are within three percent (3%) when compared to the actual weighed production harvested from the acreage used to calibrate the sensor, but the insured wants to make additional calibrations after harvest (post-harvest), the post-harvest calibration must remain within the three-percent (3%) tolerance and documentation of the actual production based on acceptable weight records used for calibration must be provided for the PFTS records to be considered acceptable. Post-harvest calibration documentation must meet the requirements in paragraphs 932 (Verifying Sold or Commercially Stored Production) and/or paragraph 1002 (Production Weighed & Farm-Stored).

(iii) The insured must provide documentation showing the sensor calibrations for the crop and crop year. The annual calibration report, from the yield monitor system or documentation from the insured, must include all calibrations and adjustments performed, by crop, for the crop year, including the date each calibration/adjustment was performed and the difference from the previous setting. The annual calibration report must be provided to the AIP or RMA.

(b) Insured's name;

(c) Unit number;

(d) FSA farm/tract/field ID number, if applicable;

(e) Legal description of acreage; and

(f) A printout, by unit, of the following PFTS information:

(i) Crop name;
(ii) Acres harvested;
(iii) Date harvested;
(iv) Total production (unadjusted for moisture);
(v) Average moisture content (must be adjusted in accordance with the CP); and
(vi) Yield maps and acreage/production summary records. These records, generated from the system, must show separate production records were maintained by unit and/or practice. These maps must be reviewed to identify harvested and UH acreage. If the map indicates UH acreage, a visual inspection is required to determine if crop appraisals are needed.

(8) If the AIP determines the PFTS production records are not acceptable, production must be determined in accordance with paragraph 1002 and paragraph 1003. The planter monitor acreage record can still be used as determined acres.

(9) If the production and yield map records provided by the insured are not reasonable or the AIP has reason to question the production and/or yield map records, the insured must provide the PFTS or yield monitor system's raw data and any additional production records requested by the AIP. If after reviewing the systems raw data, the PFTS production records are determined not acceptable, production must be determined in accordance with paragraph 1002 and paragraph 1003.

(10) All quality determinations must be made in accordance with paragraph 1102 and paragraph 1109 as applicable.

932 Verifying Sold or Commercially Stored Production

A. Harvested Production Records and Receipts

(1) Verify with the insured the names(s) in which production has been sold on insured acreage under the contract.

(2) Follow up and verify harvested production records against third-party summary/settlement sheets or storage receipts/summary from but not limited to:

(a) Commercial Elevators
(b) Packing Houses
(c) Mills
(d) Gins
(e) Seed Companies
(f) Marketing Cooperatives
(g) Warehouses
(h) Processors

(3) For all crops, acceptable third-party summary/settlement sheets or storage sheets must contain the following:

(a) Name and address of the buyer or the commercial storage facility;

(b) Insured's name;

(c) Load number or ticket number;

(d) Crop;

(e) Gross weight (for most crops this may include weight of conveyance delivering the production);

(f) Tare weight, if not weighed directly (conveyance weight, may also include dirt, rocks, etc., and may include cull weight for some fresh produce fruit);

(g) Gross bushels, if gross weight and tare weight of the conveyance are not provided by the buyer or storage facility; and

(h) Date weighed.

A. Harvested Production Records and Receipts (continued)

(4) Unit and/or field identification from which the production was harvested that can be correlated to the unit numbers. The insured (or insured's authorized representative) must handwrite this information on the third-party record. If only a field identification is shown, the adjuster must be able to verify that the field identification can be correlated with the unit numbers for the crop/county for the current crop year. If the adjuster cannot correlate the field identification to a unit number for the crop/county, the production must be considered commingled and the procedures in paragraph 1233 apply.

(5) In addition to (3) above, grain crop third-party sales or storage records should also contain at least the following:

(a) FM (or dockage, if applicable) percentage (refer to paragraph 1104 for acceptable reduction for FM or dockage),

(b) Moisture percentage (refer to paragraph 1103 for allowed adjustments for moisture), and

(c) Test Weight.

The records can be accepted if this information is not contained on the records; however, no adjustments can be made for any of these items since the information is unknown. Also, if this information is contained on the records for some loads but not all of the loads, only the loads for which the information is provided and for which adjustments would be allowed can be adjusted.

(6) Adjustments to the delivered gross production (after deduction of tare weight of conveyance).

(a) Third-party sales and storage records may contain adjustments to the gross production that may or may not be able to be used for loss adjustment purposes. Most CP (quality endorsement, if applicable), require that quality deficiencies (except test weight can be determined by the adjuster) are determined by graders licensed to grade the commodity and that are licensed by the entity specified in the CP. For some types of conditions or damage, policy provisions may require approved labs make the determinations. In these cases, a grade certificate or other acceptable document from the licensed grader/entity (or lab, if applicable) must support these adjustments. Warehouses that have licensed graders in accordance with CP may not have a formal grade certificate. In some cases, some grade deficiencies may be shown on the individual load slips, etc. Refer to paragraphs 1101 and 1102 and applicable CP, endorsements, and crop LASHs for more detailed information.

A. Harvested Production Records and Receipts (continued)

(b) For some crops and types of damage, adjustments to gross production must be based on the deficiencies determined by the authorized grader prior to the crop being delivered for sale or prior to being placed in commercial storage. These requirements can be found in one or more of the following: CP, SP, crop LASHs, or these procedures.

(7) Verify load records/weight tickets or storage receipts from the buyer or commercial storage facility against the entries on the summary/settlement sheets of the buyer or Summary of Storage of the commercial-storage facility. Obtain gross production for the unit from the summary of storage and/or settlement sheets after verification. Refer to the Forage LASH for specific information regarding requirements for forage production records.

(8) Do not use individual weight tickets or load slips without supporting documentation of total production such as third-party produced ledger sheet(s) or settlement sheet(s) from the buyer or commercial storage facility to determine harvested production for an individual unit unless the storage facility or buyer will not provide ledger or settlement sheets. When the buyer or storage facilities will not provide ledger or settlement sheets, document the facts in the Narrative of the PW or on a Special Report.

(9) Loads cannot be split between units because this constitutes commingled production and must be handled as such, unless the insured has verifiable load records as noted in subparagraph 1003C and the insured fulfills all requirements in subparagraph 1003C. Refer to paragraph 1233 for commingled production procedures. This does not apply to crops using containers, bins, boxes, crates, etc., if each container, bin, etc., is labeled for the unit where production was obtained.

(10) Production sold directly from the insured to end-users such as feed lots (commercial and individual) or another producer must be verified by additional weight documentation from either the buyer or a disinterested third party, e.g., elevator or commercial scale.

B. Claim Entry

Enter the gross production (before deductions are made for dockage, moisture, percent of shell or sugar, or quality adjustment) in the appropriate column for gross production on the PW.

(1) If the gross production of the commodity (before adjustments) on the settlement sheet is in scale weight rather than the unit of measure for the crop (e.g., settlement sheet is in pounds and unit of measure for the crop is in bushels), the adjuster must convert the scale weight to the applicable unit of measure for the crop, as stated in (2) below.

(2) To convert gross scale weight to units of measure, divide the weight by the standard weight per unit of measure. Refer to exhibit 23 for standard weights by crop.

B. Claim Entry (continued)

Example: The standard weight for a bushel of wheat is 60 lbs.

The settlement sheet shows the gross production of wheat (before adjustments) is 10,256 pounds (10256 lbs. ÷ 60 lbs. = 170.9 bu.). This bushel amount would be entered in the column for gross production on the PW.

Refer to exhibit 23 for the specific unit of measure for each crop.

C. Verification of Direct Marketed Production

When CP allow the crop to be insured when the crop is grown for direct marketing (or the CP allow coverage by SP or WA), the CP also require in the "Duties in the Event of Damage or Loss" section for the insured to notify the AIP by at least the number of days specified in the CP (SP or WA, if applicable) before any production from any unit will be harvested and sold by direct marketing. The AIP will conduct a timely pre-harvest appraisal that will be used to determine the insured's PTC for production that is sold by direct marketing. These appraisals and any acceptable records provided by the insured will be used to determine the insured's PTC. If the AIP is unable to perform the appraisal due to the insured's failure to provide timely notice, an appraisal of not less than the per-acre guarantee will apply.

(1) Acceptable Pick Records for harvested and sold production:

(a) Acceptable pick records cannot be a summary of the pick records and must:

(i) Include the names of the individuals paid by the grower (crew leader or picker).

(ii) Show the actual running tallies of production harvested by the pickers.

(iii) Be legible, understandable, and reasonable when explained by the insured.

(iv) Be accompanied by verifiable receipts such as a photocopy of the canceled check(s) showing the banking institution's stamp of payment. The insured must identify the price paid per volume of production picked (converted to the insurable unit of measure for the commodity (bushels, lugs, or boxes)), and the average weight per bushel, lug, or box.

(b) When verifying the pick records, the complete pick record for the entire crop must be reviewed.

(c) Copies of acceptable pick records with any explanation must be retained in the insured's loss-file folder.

C. Verification of Direct Marketed Production (continued)

(2) Other Acceptable Records

(a) A daily accounting of sales records showing amount of production and price received in a ledger or log.

(b) Daily cash receipts.

D. Production from Another Entity is Used to Fulfill a Speculative Contract

When an insured uses production from another entity to fulfill his/her speculative contract and the production records show it was all marketed in the insured's name, then the following documentation is considered acceptable to separate the insured's production from the production grown by the other entity:

(1) A copy of a cancelled check or other credible payment receipts if the insured has already paid for the production;

(2) If the other entity did not deliver the production directly to the insured's buyers, a copy of weight ticket(s) (from commercial elevator scales or non-portable farm scales) of the production obtained from the other entity that shows the other entity's name, crop name, weight of the production, and date weighed; and

(3) A statement, signed by the insured and the entity who furnished the other production, which explains the transaction. The statement must include at least the following:

(a) Insured's full name and policy number;

(b) Crop name;

(c) Amount of the production purchased/obtained from other entity;

(d) Payment arrangement if this was not a cash sale prior to delivery; e.g., loan, etc.;

(e) Date the production was purchased/received from the other entity or date other entity delivered the production directly to the insured's buyer;

(f) If the other entity delivered the production directly to the insured's buyer, the load numbers delivered so the amount of production from the other entity can be verified against the insured's settlement sheet;

(g) The other entity's full name, address, and telephone number;

(h) Whether the other entity also had FCI and if so, the policy number, unit number, and the name of the AIP servicing the other entity's policy; and

D. Production from Another Entity is Used to Fulfill a Speculative Contract (continued)

(i) Date the statement was signed.

The amount of production the insured produced for the unit may be considered reasonable if the yield loss for this unit is similar to the yield losses for other producers in the area and is consistent with the insured's other unit production for the crop year. Any inconsistencies of production among the insured's units must be explained, verified, and documented; e.g., hail damaged on one of the insured's units but none of the others.

933 Verifying Fed Production

(1) Fed production is considered PTC when determining total production on a unit.

(2) AIPs should encourage producers to have any quantity of production intended for feed measured (by the AIP, FSA, or other party acceptable to the AIP) or appraised by the AIP to determine the amount of production/moisture and quality before feeding; otherwise, the insured is responsible for maintaining allowable farm management records of fed production and to have those records available at the time the claim is prepared. If the production is not measured or appraised by the AIP prior to feeding, follow the procedures in items (3)-(6).

(3) Review the fed production records for reasonableness and if written records are questionable, document the reasons and notify your next level of supervision. If feeding from a previous year's inventory, to which current year's production will be added, the amount of previous year's production must be measured prior to adding current year's production. To be acceptable, fed production records must meet all of the following requirements:

(a) Be in writing;
(b) Identify the crop year in which fed production was harvested;
(c) Provide the unit from which the fed production was harvested;
(d) Be contemporaneous for each feeding as the feeding occurs; and
(e) Provide the amount of production, by crop, fed at each feeding.

(4) Refer to the Forage LASH for specific record requirements for fed and sold forage production.

(5) If fed production records are reasonable, enter fed production on the PW as gross production. Refer to the LASH for entry instructions for harvested production. Adjustments for moisture, dockage, or quality will be allowed only if acceptable records are available to support the deductions or a sample for grading is available; i.e., settlement sheets from a landlord who has a share in the same crop acreage or adjuster obtained samples from the landlord's stored production can be obtained for grading.

(6) Document the fed production records in the Narrative of the PW or on a Special Report. If a Special Report is used, it must be signed by the adjuster and the insured.

934 Verifying & Accounting for Production Not to Count

There are times when production may not be counted as part of the total production of a unit. In order to enter production not to count on the PW, accurate records of such production must have been kept; i.e., it must have been measured or weighed (with available satisfactory scale records), unless load records or combine monitoring records as allowed by paragraph 1003 are applicable, before other production is added.

(1) Examples of production not counted when accurate records are provided:

(a) Prior crop year(s) production when stored with the current crop year's production;

(b) Harvested production from uninsured acreage whether stored or sold;

(c) Harvested production from acreage damaged solely by uninsured causes (appraisal for solely uninsured causes has been applied to such acreage in the "Uninsured Cause" column of the PW);

(d) Harvested production from multiple units or contracts when stored within one storage facility;

(e) Purchased grain that is stored with harvested grain; and

(f) Harvested production from other entities when stored with the insured's production within one storage facility, and acceptable records (bin markings are not considered acceptable records) are provided that identifies the production not to count for the other entities.

(2) Substantiate production not to count from current year's production with farm management records (settlement sheets, sales receipts, load counts, weight slips, feeding records, etc.) to ensure that the adjuster is completely satisfied that such production should be considered production not to count. If the production not to count is prior year's production, the only acceptable record is the AIP's or another USDA agency's measurement of the prior year's production just prior to current year's production being added. This measurement must be kept in the insured's loss file. Otherwise, the production must be considered PTC. Refer to item (4) below.

(3) There are two ways to account for production not to count on the PW. Either method outlined below can be used unless the AIP specifies that only one of the particular methods listed below will be used.

(a) For production with storage measurements that are to be recorded in the columns for recording such measurements on the PW, the depth measurement of the production not to count may be subtracted from the total bin measurement depth. The resulting depth measurement (PTC) will be entered in the appropriate column for depth measurements as instructed in the crop LASH. Although no specific entry for production not to count is required, document the depth measurement for the production not to count in the Narrative of the PW and explain why it is production not to count. Refer to subparagraph 1008E for detailed example; or

(b) Calculate all production not to count to net production and enter in the "Production not to Count" column as instructed in the crop LASH.

(4) AIPs cannot accept insured's weight records/tickets for current year's production stored in a structure (refer to paragraph 1002) with prior year's production to separate the current and prior year's production, and cannot authorize insureds to make structure markings to separate production from the current and prior year(s) stored in the same storage structure, as described in paragraph 1003, unless the AIP or another USDA agency measures the prior year's production just prior to current year's production being added (a copy of the other USDA agency's measurements must be kept in the loss file).

935-1000 (Reserved)

PART 10 DETERMINING AND RECORDING THE QUALITY OF FARM STORED PRODUCTION

1001 Determining & Recording Farm-Stored Production that Requires Measurements

(1) Accurately measure storage structure(s). If possible, the measurements must be inside measurements. If inside measurements are not possible, the measurements must reflect the wall thickness of the structure. The circumference range on the Round Bin Conversion Chart (exhibit 10) reflects the wall thickness of a steel bin.

(2) Record measurements in feet to tenths. All obstructions must be found and deducted from the volume of the grain or silage.

Inches are converted to tenths of a foot as follows:

INCHES	TENTHS		INCHES	TENTHS
1	.1		7	.6
2	.2		8	.7
3	.3		9	.8
4	.3		10	.8
5	.4		11	.9
6	.5		12	1.0

(3) Caution – Do not enter storage structures:

(a) That are airtight (the result could be fatal).
(b) Without someone there to assist.
(c) If the stored production has been treated with any chemicals and the re-entry time has not elapsed.

(4) If a stirring device is being used in stored grain, advise the insured that accurate measurements cannot be made unless stirring is stopped at least 4 to 6 days prior to the inspection.

(5) Working with the insured, ensure that all storage structures containing production for the units being inspected have been accounted for and measured. AIPs must include storage structure location charts and measurement calculations for all farm-stored measured and calculated production in the insured's claim folder. Do not finalize the claim until the insured has confirmed that all structures have been accounted for and that production for all entities sharing in the crop(s) has been included (for all units being inspected). Refer to part 9, section 1 for information about establishing total production for the crop. Current FSA measurements of storage structures, depth of production for each unit, crop year, etc., in each structure are acceptable if all the criteria shown in paragraph 703 have been met.

If the insured meets the requirements for acceptable harvested production from a PFTS as outlined in subparagraph 931(7) the following procedures do not apply. Conversely, if the insured does not meet the requirement for acceptable harvested production from a PFTS, but the insured has weight tickets that can be used in accordance with the following procedures, then these procedures are applicable.

Use this procedure if there is a possibility that the insured may weigh and farm-store his/her production to keep records of separate production for EPs, OUs, BUs, and separate production from insured and uninsured acreage. AIPs must (prior to harvest) provide insureds (in writing) with the criteria for acceptable scales and acceptable scale weight/records outlined in subparagraphs B and C below. Non-compliance with these instructions may result in the production being considered commingled as stated in paragraph 1233.

When using the insured's weighed production, convert the weight to the applicable unit of measure, if needed, and adjust for any excess moisture based on the insured's recorded moisture determination for each load at the time production was weighed. Refer to CP for what is considered excess moisture. Any conveyance load for which there is not excess moisture or the insured has no records of moisture determinations for the conveyance load cannot be adjusted for excess moisture.

A. Insured's Weighed Production for the Current Crop Year

Adjusters must measure and calculate all farm-stored production for the unit and current crop year unless PTC is determined from pre-harvest appraisals as required or permitted in subparagraph C(4) below. If the insured provides acceptable weight records for the current crop year adjusters may:

(1) Use the insured's weighed production, converted to the applicable unit of measure, and adjusted for excess moisture in accordance with the CP, for the current crop year provided the:

(a) Insured's weighed production is within three percent (3%) of the adjuster-measured and calculated production, adjusted for any excess moisture and pack factor, if applicable.

(b) The insured's weighed production records are from a grain cart as described in subparagraph B(3)(c) below (adjusted for any excess moisture as described above). The adjuster will not be required to verify the production records from such a grain cart by other means (i.e., bin measurements, sales records, etc.), unless there is reason to question the accuracy of the records provided by the insured.

If the insured's weighed production records are in question, the adjuster must verify the production by other means (i.e., bin measurements, sales records, etc.). If the adjuster-measured and calculated production, adjusted for any excess moisture and pack factor, if applicable, is within three percent (3%) of the insured's weighed production records, then the insured's weighed production records may be accepted.

A. Insured's Weighed Production for the Current Crop Year (continued)

(c) Insured has met the criteria for acceptable scale types, as stated in subparagraph B below and provides the verifiable location of the scales used to weigh the production;

(d) Insured has met the criteria for acceptable weight tickets/records as stated in subparagraph C below);

(2) If the insured's weighed production for the current crop year is not within three percent (3%) of the adjuster-measured and calculated production with adjustments for moisture and pack factor, if applicable, the AIP will use the greater of the:

(a) Insured's weighed and adjusted production (as stated above) for the current crop year, or

(b) Adjuster-measured and calculated production (adjusted as stated above) for the current crop year.

(3) When the insured's weighed production is not within three percent (3%) of the adjuster-measured and calculated production:

(a) If the insured's weighed production for these units is greater than the adjuster's measured and calculated production, no proration is needed.

(b) If the adjuster's measured and calculated production (adjusted as stated in (2) above) is greater than the insured's weighed production, then the adjuster measured and calculated production must be prorated to each unit, as follows:

Step 1: Total the weight tickets, per unit

For example, the storage structure contained corn from units 0001-0001OU, 0001-0002OU, and 0001-0003OU. Based on the total weights (converted to bushels) for each of these units, the production for each of these units were as follows: unit 0001-0001OU =3,019.5 bu., 0001-0002OU = 5,685.4 bu., and unit 0001-0003OU = 2,789.3 bu.

Step 2: Sum the totals for all units in the storage structure

For example, assume the total weight records for each were:
Unit 0001-0001OU = 3,019.5 bu.
Unit 0001-0002OU = 5,685.4 bu.
Unit 0001-0003OU = 2,789.3 bu.
Total = 11,494.2 bu.

A. Insured's Weighed Production for the Current Crop Year (continued)

Step 3: Proration of Each Unit Based on Total Weight of all Units (rounded to 6 decimal places)

For example, using the same figures in Step 2:

3,019.5 ÷ 11,494.2 bu. =	.262698
5,685.4 ÷ 11,494.2 bu. =	.494632
2,789.3 ÷ 11,494.2 bu. =	.242670
Total =	1.000000

If the total of these factors do not equal 1.000000, as shown in this example, adjust one or more of these factors so the total equals 1.00000.

Step 4: Total Measured and Calculated Production

For example, assume the adjuster measured and calculated production in the storage structure as: 12,564.7 bu.

Step 5: Proration of production to each unit

For example, using the figures from Steps 2, 3, and 4, the per-unit proration of the total weighed production for all units in the structure is:

12,564.7 X .262698 = 3,300.7 bu. unit 0001-0001OU PTC
12,564.7 X .494632 = 6,214.9 bu. unit 0001-0002OU PTC
12,564.7 X .242670 = 3,049.1 bu. unit 0001-0003OU PTC

(4) If either or both of the insured's scale or weight tickets/records are unacceptable, the insured's records of weighed production cannot be used. The adjuster measured and calculated production will be used and the procedures for commingled production in paragraph 1233 will apply.

(5) Insured's weight tickets/records for previous year's production cannot be used to separate prior year's production from current year's production stored in the same storage structure, unless the AIP or another USDA agency measures the prior year's production just prior to current year's production being added (a copy of the other USDA agency's measurements must be kept in the loss file). Also, refer to subparagraph 934(4).

B. Acceptable Scale Types

The AIP must provide the following information (in writing) to the insured prior to harvest of what is needed to have acceptable scale weight tickets/records for loss adjustment purposes. Acceptable scale types are, as follows:

(1) Non-portable on-farm scales,
(2) Commercial elevator scales, or
(3) Grain carts provided the grain cart:

(a) Can produce printed tickets showing the weight;
(b) Has an integrated display panel to show the weight of the production in the cart, provided the cart is available so the capacity of the cart can be determined; or
(c) Is equipped with scales integrated with Bluetooth (or other wired or wireless) interface that is calibrated according to manufacturers' specifications and capable of electronically recording and storing weight records on a field-by-field basis from which the insured can print all individual load tickets and detailed summary, including all of the required information listed in subparagraph C below. If a producer used multiple grain carts, but not all were equipped with the system described herein, the adjuster must verify the production by other means (i.e., bin measurements, sales records, etc.).

C. Acceptable Scale Weight Tickets or Records

(1) To be acceptable, each individual scale weight ticket or record for each load must be available and must provide at least the following information:

(a) Insured's name;

(b) Crop;

(c) The gross weight, per load, of the conveyance with production and the gross weight of the conveyance without production, except as stated in (i) below;

(i) Only the gross weight, per conveyance, of the production is required if the production is weighed using a grain cart that:

(A) prints out weight tickets showing the gross weight of production;

(B) has an integrated display panel showing the gross weight of the production from which the insured documents the weight; or

(C) is equipped with scales integrated with Bluetooth (or other wired or wireless) interface that is calibrated according to manufacturers' specifications and capable of electronically recording and storing weight records on a load by load basis from which the insured can print all individual load tickets and detailed summary, by unit, which includes all of the required information.

C. Acceptable Scale Weight Tickets or Records (continued)

(ii) Scale Weight tickets/records printed from grain carts should be photocopied since the print can disappear with time.

(d) Date weighed;

(e) Load Number (if the scale used does not print a number, the insured must apply a number);

(f) Unit and/or field identification from which the production was harvested that can be correlated to the unit numbers for the crop stored. To be acceptable, the adjuster must verify that the field identification can be correlated with the unit numbers for the crop for the current crop year. If a field identification cannot be correlated to a unit number for the crop, the production must be considered commingled, and the procedures in paragraph 1233 apply.

(g) Identification and location of farm-storage structure in which the load(s) from each field are stored and/or satisfactory explanation of disposition of the production if any or all of the production is no longer stored at the time of inspection; and

(h) When scale weights are from a grain cart that cannot produce printed electronic records or weight tickets, but the grain cart has an integrated display panel, a record is considered a handwritten contemporaneous log if the insured has recorded all of the information required below for each grain cart load weighed.

(2) A summary record of all scale weight tickets/records is not acceptable. The insured must hand-write any of the required information listed in (1) above if the scale used is not capable of printing a ticket or the required information.

(3) To convert scale weight to units of measure, divide the weight by the standard weight per unit of measure. Refer to exhibit 23 for standard weights by crop.

Example: The standard weight for a bushel of wheat is 60 lbs. (10,256 lbs. ÷ 60 lbs. = 170.9 bu.). This bushel amount would be entered in the column for gross production on the PW. Refer to exhibit 23, Unit of Measure of Production, by crop.

(4) Pre-harvest appraisal in lieu of the adjuster measuring & accepting the insured's weight tickets, when:

C. Acceptable Scale Weight Tickets or Records (continued)

(a) production will be stored in such a manner that the production cannot be measured (refer to subparagraphs 921A(3)(c) and (d)) to determine whether the weighed production was within the three percent (3%) tolerance as stated in A(1)(a) above (e.g., high-moisture corn stored in airtight structures). If a pre-harvest appraisal is not done to determine the PTC, the claim must be denied because the insured does not have verifiable records of the stored production in the absence of the AIP being able to verify the actual harvested production in the structure by measuring the production in the structure.

(b) the insured intends to farm store production in commercial-sized storage structures. However, if a pre-harvest appraisal is not done, the AIP must still measure the stored production or have the stored production measured at the AIP's expense. When loss adjustment inspections are required for such units, the insured cannot be charged or told by the AIP that they have to pay for such measurements.

D. Adjuster-Determined Weight of Harvested Farm-stored Forage Production

Adjusters are also allowed to use portable suspended scales to determine the average weight (average the weight of at least 2 large bales and/or 3-4 small bales) of representative bales of forage production to determine harvested production. The scales must be calibrated for accuracy and verified by the AIP. The adjuster can accept the insured's record of the average weight of the farm-stored bales the insured has weighed on commercial elevator scales or the insured has weighed on his/her own portable suspended scales but only if the adjuster can verify the accuracy of the scale and determine if the weights appear to be representative of the farm-stored bales.

E. Verification and Documentation of the Weighed Production

Verify and document that the insured's scales and weight tickets/records met the criteria stated in subparagraphs B and C above. Copies of the following must be retained in the insured's claim folder:

(1) Insured's weight tickets/records;
(2) Insured's moisture records (if applicable);
(3) Location of on-farm scales used;
(4) Number and type of grain carts used to weigh the production;
(5) Storage-structure location maps;
(6) Tolerance comparison of production as stated in subparagraph A(1) above;
(7) Fed production records;
(8) Proration calculations if adjuster prorated production among multiple units in a bin;
(9) Any other pertinent information; and
(10) Adjuster's bin measurement production calculations, and moisture determinations (if applicable).

If the insured meets the requirements for acceptable harvested production from a PFTS as outlined in subparagraph 931(7), the following procedures do not apply. Conversely, if the insured does not meet the requirement for acceptable harvested production from a PFTS, but the insured has load records, combine monitor records, or bin markings that meet the criteria for the following procedures, then these procedures are applicable.

Authorization to accept insured's structure markings, load records, and combine monitor records is to be used prudently and is not considered a routine means to satisfy the insured's responsibility to keep production separate by units and uninsured acreage, etc. The insured is still responsible for giving timely notice to the AIP that production from the unit needs to be measured, rather than the AIP relying on the insured's structure markings, load records, or combine monitor records.

A. Measurements Prior to Insured Commingling Production

(1) For purpose of indemnities, AIPs generally cannot accept the insured's determinations of separate unit production when production has been commingled with other units, uninsured acreage production, or different crop years (paragraph 1233), unless the exception in (2) and B below applies. When a loss situation is probable and the insured plans to store production from multiple units, or production from insured and uninsured acreage or multiple crop years within the same storage structure, prior to doing so, the insured should request the AIP measure the production. Refer to Production Pre-measurement Service, paragraph 703.

(2) When the AIP cannot timely perform production pre-measurement services, the AIP may accept the insured's weighed production records and the insured's moisture determination records, if applicable and acceptable to the AIP for production from each unit, including insured and uninsured acreage, etc.

B. AIP Authorization to use Insured's Production Records or Structure Markings

(1) The AIP may not be able to timely perform pre-measurement services due to the large number of requests. In these cases, the AIP may authorize (orally or in writing) insureds to use their own bin (or other structure) markings, contemporaneous load records from conveyances, or combine monitor (printed) records, or weighed production records to keep the production separate, provided:

(a) The AIP has provided insureds with the criteria and instructions in subparagraphs C and D below (in writing). Non-compliance with these instructions will result in the production being considered commingled as stated in paragraph 1233;

(b) There is no reason to suspect that the grain is infected with a mycotoxin, other than Vomitoxin;

B. AIP Authorization to use Insured's Production Records or Structure Markings (continued)

(c) The AIP does not suspect the insured will fail to follow the instructions or will misrepresent the production from each unit or from uninsured and insured acreage;

(d) AIPs document the names and contract numbers of any insured for which this procedure is not allowed; and

(e) All of the conditions in C below are met.

(2) AIPs may allow insureds to follow this same procedure when they may have the need to add multiple units of production or production from insured and uninsured acreage within the same conveyance. If the production within the conveyance is not farm-stored, it must be conveyed to a buying point and all applicable records must be acceptable to the AIP.

(3) Adjusters must document in the Narrative section of the PW or on an attached Special Report whether the:

(a) Insured's records or structure markings were used to keep production from multiple units separate or to keep production from insured and uninsured acreage separate; or

(b) Adjuster measured the production in the storage structure prior to another unit of production being added, or production from insured acreage added to production from uninsured acreage or vice versa. If the adjuster measured such production, the adjuster must document his/her name and the dates that such production was measured.

(4) Criteria needed to accept insured's production records or storage-structure markings used in lieu of AIP pre-measurement of production that is to be kept separate

(a) If load records or combine monitor records are used to keep production separate, the loads are recorded as outlined in C(1) and (3) below.

(b) If structure markings are used, the structure is marked and identified as outlined in subparagraph C(2) below.

(c) There is no production from prior years in the structure, unless the production has been measured by the AIP or another USDA agency just prior to the current year's production being added. If another USDA agency's measurements are used, you must determine whether the grain was leveled.

B. AIP Authorization to use Insured's Production Records or Structure Markings (continued)

(d) The total production within the structure must be accounted for; i.e., all production stored in the storage structure can be identified separately by unit number or field I.D., uninsured acreage, etc.

C. Instructions for Records or Markings Used in Lieu of AIP Pre-Measurement of Production

(1) Load Records:

(a) Maintain a contemporaneous ledger, by crop, recording loads of production for the crop identified by unit and/or field identification, date of harvest, identity of the conveyance used to transport the grain to the bin and the estimated bushel volume per conveyance.

(b) The adjuster must verify that the field identification can be correlated with the unit numbers for the crop for the current crop year. If a field identification cannot be correlated to a unit number for the crop, the production must be considered commingled, and the procedures in paragraph 1233 apply.

(c) Insureds are permitted to adjust their load records for excess moisture, and if they have done so, this will be used to compare against the adjuster measured and calculated production including adjustments for moisture in accordance with the CP if the adjuster's moisture test shows excess moisture.

(2) Storage Structure Markings:

(a) Identify the depth of such production by marking the storage structure with a permanent marker. Write the unit number(s) and/or field identification from which the production was harvested, and date and initial the mark.

(b) Identify and mark the depth of uninsured acreage production separately from insured acreage production when the storage structure will contain both.

(c) The adjuster must verify that the field identification numbers can be correlated with the unit numbers for the crop for the current crop year. If a field identification cannot be correlated to a unit number for the crop, the production must be considered commingled, and the procedures in paragraph 1233 apply.

(3) Records from Non-PFTS Combine Monitors:

(a) Printed records from combine monitors must show the field identification and location, name of crop, date, and number of pounds or bushels of the crop. Insureds must also identify the unit number that correlates with the field identification on the records.

C. Instructions for Records or Markings Used in Lieu of AIP Pre-Measurement of Production (continued)

(b) The adjuster must verify that the field identification can be correlated with the unit numbers for the crop for the current crop year. If a field identification cannot be correlated to a unit number for the crop, the production must be considered commingled, and the procedures in paragraph 1233 apply.

(c) If production from the combine monitor records has been adjusted for moisture by the insured or automatically by the combine monitor, this recorded amount will be the amount compared against the adjuster's measured and calculated production, including adjustments for moisture in accordance with the CP.

D. Adjuster Verification of Insured's Records or Storage-Structure Markings & Production Determination from These Records

Do not finalize claims on units with production in such structures until all production from all units, uninsured acreage, prior crop year(s), etc., within the structure can be accounted for.

(1) Load Records or Combine Monitor Records

(a) Verify:

(i) whether the load records from the conveyance appear to be recorded contemporaneously.

(ii) whether the insured meets the criteria to accept records as stated in subparagraph B(4).

(b) Measure empty conveyances to verify reasonableness of the recorded loads. If conveyances are not available try to determine from the insured (or other reliable source) the capacity of the conveyance used.

(c) If the insured has not met the criteria in subparagraph B(4) and/or followed the instructions in subparagraph C, or the recorded loads are not reasonable, the production must be considered commingled and the procedures for commingled production in paragraph 1233 will apply.

(d) Follow the steps below to determine the production to be recorded on the PW for the unit if there are multiple units in the same structure:

Step 1: The adjuster must measure the total production in the structure and determine the gross amount of production in the storage structure in the appropriate unit of measure for the crop (e.g., bushels or pounds) and add any production fed to obtain the total adjuster-determined production.

D. Adjuster Verification of Insured's Records or Storage-Structure Markings & Production Determination from These Records (continued)

Step 2: Sum the bushels/pounds from the insured's load records inclusive of any production fed or combine monitor records for each unit and/or production from uninsured acreage. Sum the totals of all unit(s) including the total sum of production from uninsured acreage, if applicable, in the storage structure. If necessary, convert the insured's recorded production to the appropriate unit of measure for the crop; e.g., bushels or pounds (refer to exhibit 23).

Step 3: If the results of Step 1 (Adjuster-determined Production) and Step 2 (Insured-recorded Production) are not exactly the same the production must be prorated by using the load records of a conveyance or combine monitor records to prorate the commingled production contained in adjuster-measured structure (i.e., grain bin, semi-hopper, etc.) on a percentage basis.

Example: Insured's load records for a conveyance (or combine monitor records) indicate six 250.0 bu. loads in bin "A" from unit 0001-0001OU and four 250.0 bu. loads also in bin "A" from unit 0001-0002OU. The adjuster measures bin "A" and determines a total of 2,618.0 bu. in bin "A." Percentage of each unit's production stored in storage structure based on insured's load records:

1,500.0 bu. unit 0001-0001OU + 1,000.0 bu. unit 0001-0002OU = 2,500.0 bu. total (in bin based on insured's records)

6 loads X 250.0 bu./load = 1,500.0 bu. unit 0001-0001OU ÷ 2,500.0 total = .600000

4 loads X 250.0 bu./load = 1,000.0 bu. unit 0001-0002OU ÷ 2,500.0 total = .400000

2,618.0 bu. (total measured and calculated production in bin "A") X .600000 = 1,570.8 bu. PTC for unit 0001-0001OU

2,618.0 bu. (total measured and calculated production in bin "A") X .400000 = 1,047.2 bu. PTC for unit 0001-0002OU

D. Adjuster Verification of Insured's Records or Storage-Structure Markings & Production Determination from These Records (continued)

(2) Storage Structure Markings

(a) Verify whether the insured meets the criteria to accept records as stated in subparagraph B(4). If the insured has not met the criteria in subparagraph B(4) and/or followed the instructions in subparagraph C, the production must be considered commingled and the procedures for commingled production in paragraph 1233 will apply.

(b) Verify with the insured whether the production in the structure was leveled prior to the addition of production from another unit (from uninsured acreage, if applicable), and whether the structure marking was made at the base of the cone or height of the cone. If the bin marking was made at the height of the cone, the depth of the unit must be adjusted for the height of the cone by using the height of the cone for the top unit (uninsured acreage, if applicable) in the bin.

(c) Determine production for each unit or for production from insured and uninsured acreage by using the insured's markings.

If the insured has not leveled the production before adding additional production from another unit (uninsured acreage, if applicable), the adjuster must measure the cone at the top of the structure and use this measurement for the cone measurement for the bottom unit(s) of production in the structure. The cone of the lower unit protrudes into the upper unit and offsets the upper cone, therefore no cone measurement will be used for the upper unit of production (uninsured acreage, if applicable). The volume of the grain in all cones in the structure are considered the same.

D. Adjuster Verification of Insured's Records or Storage-Structure Markings & Production Determination from These Records (continued)

Example: The insured did not level production of 0001-0101 OU before adding production from 0001-0102 OU.

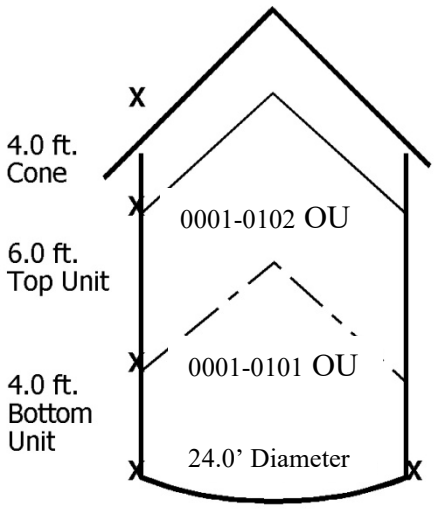

The diameter of the bin is 24 feet. The depth of the cone at the top of the bin is 4 feet. There are two units of corn in the bin. Unit 0001-0101 OU is the unit at the bottom of the bin, and unit 0001-0102 OU is the unit at the top of the bin. (The depth measurements for each unit marked on the bin did not include the height of the cone.) The depth of unit 0001-0101 OU is 4 feet, and the depth of unit 0001-0102 OU is 6 feet.

Unit 0001-0101 OU gross stored production: (bottom unit in bin)

24^2 X .7854 X 4.0' X .8 =	1,447.6 bu.
Cone: 24^2 X .2618 X 4.0' X .8 =	482.5 bu.
Total	1,930.1 bu.

Unit 0001-0102 OU gross stored production (top unit in bin): 24^2 X .7854 X 6.0' X.8 = 2,171.5 bu.

Total Production from Unit 0001-0101 OU and Unit 0001-0102 OU = 4,101.6 (1,930.1 + 2,171.5)

(d) To test the accuracy of the calculated individual unit production, the total production in the bin and the sum of the calculated production for the two individual units should be the same.

(i) If the measured and calculated production is exactly the same, no further action is needed.

(ii) If total measured production in the bin did not match the sum of each marked unit in the bin, then the total measured production in the bin must be prorated proportionately to each unit based on a percentage basis.

D. Adjuster Verification of Insured's Records or Storage-Structure Markings & Production Determination from These Records (continued)

Example: Proration of total measured production to each unit when total measured production in the bin and the sum of the calculated production for the two individual units are not the same.

The adjuster measured and calculated total production in the bin at 2,485.4.

Unit 0001-0101 OU is the unit at the bottom of the bin, and unit 0001-0102 is the unit at the top of the bin. The diameter of the bin is 18 feet. The depth of unit 0001-0101 OU is 4 feet, and the depth of unit 0001-0102 OU is 6 feet. The depth of the cone at the top of the bin is 4 feet.

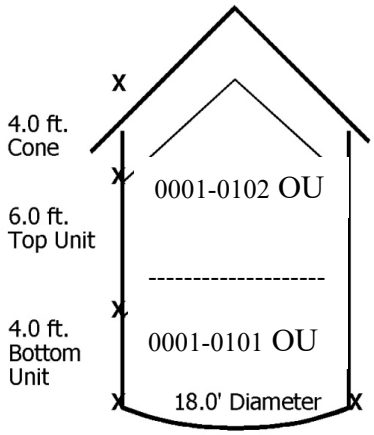

Total production calculations based on bin markings:

Unit 0001-0101 OU gross stored production: (bottom unit in bin):
18^2 X .7854 X 4.0' X .8 = 814.3 bu.

Unit 0001-0102 OU gross stored production (top unit in bin):
18^2 X .7854 X 6.0' X .8 = 1,221.5 bu.
Cone: 18^2 X .2618 X 4.0' X .8 = 271.4 bu.
1,492.9 bu.

Total production based on bin markings = 2,307.2 (814.3 + 1,492.9)

Proration of measured production to each unit in bin:

Unit 0001-0101 OU = 814.3 ÷ 2,307.2 bu. (total of unit 0001-0101 OU and 0001-0102 OU) = .352939

Unit 0001-0102 OU = 1,492.9 bu. ÷ 2,307.2 bu. (total of unit 0001-0101 OU and 0001-0102 OU) = .647061

2,485.4 (total measured production in bin) X .352939 = 877.2 bu. PTC to unit 0001-0101 OU

2,485.4 (total measured production in bin) X .647061 = 1,608.2 bu. PTC to unit 0001-0102 OU

E. Quality Adjustment Determinations

QA is allowed if the production qualifies as provided in the policy and/or SP and if the samples are extracted from the storage structure by the AIP's representative (samples cannot be taken by the insured). Samples for any mycotoxin other than Vomitoxin must be taken by the adjuster prior to the production entering storage.

(1) QA will be determined from the samples extracted from the bin by the adjuster.

(2) If significant differences in grain quality between (or among) units are indicated on the truck ledger, storage structure, or a storage structure ledger these significant differences (by individual unit) can be allowed only if the adjuster can ensure a sample can be extracted from the structure for each unit in the structure, and that the tested samples reflect the significant differences recorded on the truck ledger, storage structure, etc. Otherwise, the average sample of what is in the bin should be used/applied to all units in the bin; i.e., one test weight, one moisture percentage, one Vomitoxin sample, etc.

(3) Document in the Narrative of the PW or on a Special Report any significant differences in grain quality.

(4) Moisture percentages, FM/dockage percentages, and non-quality levels of test weight would be handled the same way as stated above.

1004 Determining Amount of Grain Stored in Grain Bags

(1) Using the unusual-shaped-structure procedures in paragraph 1008 to determine the gross cubic feet of grain in the bags; i.e., measuring the component parts as stated in subparagraph 1005A(3)(e). A TWPF is applicable to the crops listed in subparagraph 1005B(1). Gross cubic feet and TWPF are part of the farm-stored PTC formula, as stated in paragraph 1006. When making measurements the adjuster must:

(a) Determine the TWPF as stated in subparagraph 1005B(8). For grain bags, calculate the square feet needed to determine the TWPF, as follows:

(i) Determine the length of the grain bag;
(ii) Determine the width of the grain bag; and
(iii) Multiply length by the width to get square feet.

(b) Obtain the required TW sample (plus applicable samples for quality, etc.). If the required TW samples cannot be obtained, the production determination cannot be completed. AIPs should caution adjusters to not cut or otherwise attempt to open the bag to obtain the samples. Only the insured should open or authorize the opening of the bag, so the adjuster can obtain samples for TW and quality purposes. Samples for quality must be taken no later than 60 days after the EOIP. If the adjuster cannot obtain samples prior to this date for the purpose of determining grain quality, including samples to determine Vomitoxin, no QA will be allowed.

Caution: Except for Vomitoxin, samples to determine Aflatoxin or other mycotoxins, substances, or conditions injurious to human or animal health must be obtained by the adjuster prior to the grain entering the bag. Refer paragraph 1109 for additional information.

(2) The insured is allowed to request, in writing, to delay measurement of farm-stored grain and settlement of any potentially associated claim for indemnity up to 180 days after the EOIP. Refer above for when samples for quality must be obtained, and also refer to subparagraph 702C(4)(b)(iv). This request can also be used when the insured does not agree with AIPs determination of the volume of grain in the bag(s) to allow the insured additional time to remove the grain from the bags to deliver to a buyer or move to permanent farm-storage structure for the AIP's redetermination of the amount of production prior to completion of the claim.

(3) If prior to the inspection of final settlement of the claim the insured delays measurement of the grain up to 180 days after the EOIP:

(a) If all of the grain from the bag(s) has been removed and delivered to the buyer, the AIP may determine the amount of PTC from the settlement sheet(s) to settle the claim, provided the production from the units delivered from the grain bags can be identified. For QA of grain, refer above and subparagraph 702C(4)(b)(iv).

(b) The AIP may determine production in grain bag(s) to settle the claim, provided the amount of production for each separated unit contained in the grain bag can be identified when:

(i) A single unit or multiple units have been weighed prior to being placed in a grain bag, the weight tickets may be used if all of the criteria in paragraph 1002 have been met.

(ii) Multiple units have been placed in a grain bag and the unit production for each unit has been separated by one of the methods allowed in paragraph 1003 (e.g., load records) and all of the criteria in paragraph 1003 have been met, such production may be used to settle the claims.

(iii) Part of the grain stored in the bag(s) has been removed and sold, and part of the grain remains in the grain bag(s), settle the claim based on the settlement sheets for the sold production and measurement of production remaining in the grain bags. Refer above for QA of grain.

(c) The AIP may determine production from acceptable feed records as outlined in paragraph 933 to settle the claim when all or part of the grain in the grain bags has been fed. However, if there are no acceptable feed records, the full per-acre guarantee must be applied to the applicable acres.

(d) During the farm visit, if the AIP discovers the production in the grain bags have been moved to a permanent farm storage structure (e.g., bin), the AIP may determine the production in the permanent farm storage structure provided the unit(s) from which the production was harvested can be identified and the AIP is satisfied that all production for the unit has been established. For QA of grain, refer above and subparagraph 702C(4)(b)(iv) if the insured requested to delay measurement of the grain for up to 180 days after the EOIP.

1005 Recording Farm-Stored Production on the Production Worksheet

A. Determining and Documenting Farm-Stored Production

For production for which the insured's weighed production is not allowed as stated in paragraph 1002 and when paragraph 1003 does not apply, the following procedures apply:

(1) For square, rectangular, and round storage structures, entries for internal measurements of structural space occupied by the crop, test weight, and any entries for moisture, dockage, production not to count, and/or quality will be entered in the appropriate columns on the PW as instructed in the individual crop LASH. Calculate the net PTC using applicable entries for the storage structure(s).

(2) Outside measurements of storage structures may be used when internal measurements cannot be obtained; however, the dimension used should reflect the internal space occupied by the crop taking the wall thickness into consideration. Do not adjust circumference measurements of steel bins for the wall thickness of the structure because the circumference range on the Round Bin Conversion Chart (exhibit 10) accommodates varying wall thickness.

(3) For all other structures (hexagon, octagon, odd-shaped, etc.):

(a) If the AIP's PW requires calculation of gross production for odd-shaped structures, hand calculate gross production adjusted by TW from these structures and enter in the column used for gross production on the PW.

A. Determining and Documenting Farm-Stored Production (continued)

(b) If the AIP's PW requires calculation of net cubic feet, hand calculate the net cubic feet from these structures, and enter in the column used for net cubic feet on the PW unless component parts from an odd shape structure are square, rectangular, or round as explained in (e) below.

(c) Enter any applicable entries for moisture, dockage, quality, TW (conversion factor, if applicable per AIP's PW) or PTC, etc., in the appropriate columns on the PW as instructed in the individual crop LASH and from these entries, make further adjustments to the production entered in the column for gross production to determine the net production.

(d) Paragraph 1006 shows the steps to calculate gross production adjusted for TWPF (if applicable), and paragraph 1007 provides gross cubic feet formulas for these structures.

(e) If the odd-shaped structure consists of component parts that are square, rectangular, or round, the individual component part measurement for each square, rectangular, conical, or round part in the odd-shaped structure may be entered on the PW. Refer to paragraph 1008 for unusual (odd-shaped) storage configurations for measurement and computations.

(4) Document any calculations you have made, on a Special Report or other form provided by the AIP, for storage structures requiring entries in the column used for gross production on the PW or calculations used to obtain square, round, or rectangular component part measurements for odd shaped structure that were entered on the PW. Copies of calculations must remain in the contract folder.

B. Pack Factors

(1) TWPFs are applicable for the following crops: Barley, corn, grain sorghum, hybrid corn seed, hybrid sorghum seed, hybrid rice seed, oats, popcorn, rice, soybeans, and wheat. The TWPF tables and instructions can be found in the individual crop LASHs.

(2) For unweighed farm-stored barley, corn, grain sorghum, hybrid corn seed, hybrid sorghum seed, hybrid rice seed, oats, popcorn, rice, soybeans, and wheat that is:

(a) Shelled or threshed whole grain, use the combination TWPF as specified herein and the individual crop LASH.

(b) Other than shelled or threshed whole grain; e.g., ear corn, ground grain, cracked grain, etc., use the TW factor (refer to subparagraph 1107C(1)) instead of the combination TWPF as specified herein and the individual crop LASH.

B. Pack Factors (continued)

(3) Although FSA has pack factor tables for canola, chick peas, dry peas, flaxseed, lentils, mustard, safflower, and sunflower seed, RMA is not including them because the factors are merely a TW conversion (Actual TW/Standard TW) with no adjustment for pack in the factors.

(4) TWPFs are applied to all farm-stored production for crops listed in (1) above that are stored within a structure or conveyance; i.e., production stored in all shapes of structures and conveyances, including cones, inverted cones and conical piles of production within the structure or conveyance.

(5) Do not apply TWPFs to farm-stored production that is not in a structure or conveyance (e.g., ground-stored, conical pile, etc.) not having sidewalls.

(6) For production in cones and inverted cones that are stored within a structure or conveyance, apply the same TWPF that is applicable to the greatest portion of the structure; e.g., the same TWPF applied to the cylindrical portion applies to the cone in the same structure,

(7) When the production does not touch the sidewalls (e.g., stored in a structure or conveyance not touching sidewalls, or stored in a structure in a pile with no sidewalls), the square feet of floor space will differ and could result in a different TWPF. Refer to subparagraph (8)(b)(ii) below for the square feet of floor space calculation for production not touching sidewalls.

(8) Calculate square footage of the floor space used to determine TWPF for all storage structures as follows:

(a) When production is in a round structure, the floor space is determined by multiplying diameter times diameter times .7854.

(b) When production is in a cone, conical pile, or inverted cone and is:

(i) Touching sidewalls of structure, the floor space is determined by multiplying structure diameter times structure diameter times .7854.

(ii) Not touching sidewalls, the floor space is determined by multiplying diameter of the base of cone times diameter of base of cone times .7854.

(c) When production is in a square or rectangular structure (including grain bags), the square footage of floor space is determined by multiplying length x width.

(d) For semi-hoppers, gravity wagons, etc., calculate the square footage of the floor space using the largest portion of the conveyance.

(e) For all other structure shapes, refer to paragraph 1007, and use the formula for the specific shape without applying the step for depth.

B. Pack Factors (continued)

(f) Refer to the individual crop LASHs for instructions on determining the TWPF from the TWPF Table.

Example: The corn sample has a TW of 56 pounds and is stored in a structure with 254 square feet of floor space. For a TW of 56 pounds and a 254 square feet of floor space, the TWPF Table in the Corn LASH shows the correct TWPF is 1.018. Enter this factor on the PW as shown in the examples in subparagraph 1008E.

1006 Farm-stored Production-to-count Formula

Based on the AIP's instructions, adjusters are to round after each step or at the end of the calculation. The step-by-step process used to determine production for these structures is:

(1) Record measurements accurately.

(2) Determine gross cubic feet (Refer to paragraph 1007).

(3) Gross cubic feet minus deductions in cubic feet equal net cubic feet (Refer to paragraph 1009).

(4) Net cubic feet times conversion factor equals unadjusted gross production (Refer to exhibit 22).

(5) For popcorn, the unadjusted gross production in bushels is multiplied by the actual TW.

(6) Unadjusted gross production times shell factor or sugar factor, if applicable for the crop, equals adjusted gross production for shell or sugar factor. Shell factor is for ear corn. Procedures to determine the shell factor are in the Corn LASH. Refer to the individual crop LASHs for procedures regarding sugar factor. If shell or sugar factor is not applicable, skip to step (7).

(7) Unadjusted gross production (adjusted gross production for shell or sugar factor) times FM factor (if applicable) equals gross production adjusted for FM (refer to paragraph 1104).

(8) Gross production adjusted for FM times moisture adjustment factor (if applicable) equals gross production adjusted for moisture and FM (refer to paragraph 1103).

(9) Gross production adjusted for TW:

(a) For crops not having a TWPF, gross production adjusted for moisture and FM times actual TW divided by standard TW equals adjusted gross production (refer to paragraph 1001). This applies to canola/rapeseed, dry beans, rice, dry peas, mustard, safflowers, and sunflowers. Refer to the Cultivated Wild Rice LASH for specific TW to be used.

(b) For crops having TWPFs (refer to the list in subparagraph 1005B above), gross production adjusted for moisture and FM times the TWPF for the applicable crop equals adjusted gross production. Refer to subparagraph 1005B(8) above for calculating square footage of floor space, which is needed to determine the TWPF.

(10) Adjusted Production minus Production Not to Count, if applicable. Refer to paragraph 934.

(11) Production equals the results of last applicable step; i.e., either step (9) or (10).

(12) Production times QAF (if CP allow for QA and production qualifies for QA) equals PTC.

(13) PTC (refer to paragraphs 1101 and 1102) equals the results of step (11) or (12), whichever is applicable.

1007 Gross Cubic Feet Formulas by Structure

All of the following measurements are made in feet, to tenths. Round at the end of the calculation unless instructed otherwise by the AIP.

A. Square or Rectangular Structure

Length times width times leveled depth equals gross cubic feet.

12.0’ X 5.0’ X 3.0’
Gross Cubic Feet = 180.0

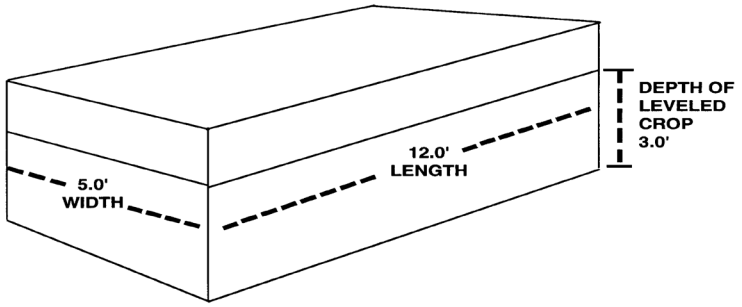

B. Round Structure

(1) Diameter squared times .7854 times leveled depth equals gross cubic feet.

16.0^2 = 256.0 X .7854 X 13.6 =
2734.4 Gross Cubic Feet

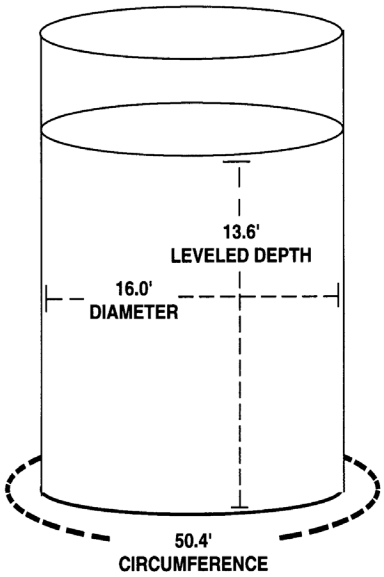

(2) The circumference measurement can be used to determine the diameter of the bin. Use the Round Bin Chart (exhibit 12) to determine the diameter of the bin from the circumference measurement. The Round Bin Chart also provides the square foot factor for each size of bin.

(3) The adjuster can mathematically compute the diameter of a round bin by multiplying the circumference measurement by .31831.

Note: The square foot factor (Round Bin Chart, exhibit 10) times the level crop depth will also determine the gross cubic feet of a round bin.

C. Hexagon Structure (6 sides)

Length of side squared times 2.598 times leveled depth equals gross cubic feet.

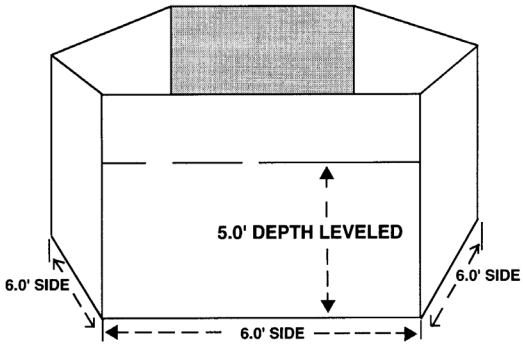

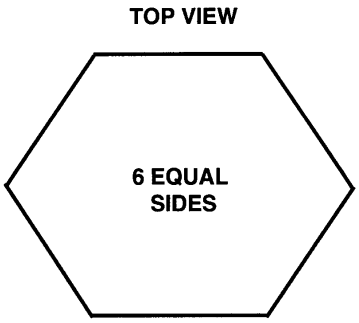

6.0^2 X 2.598 X 5.0 =467.6 Gross Cubic Feet

D. Octagon Structure (8 sides)

Length of side squared times 4.828 times leveled depth equals gross cubic feet.

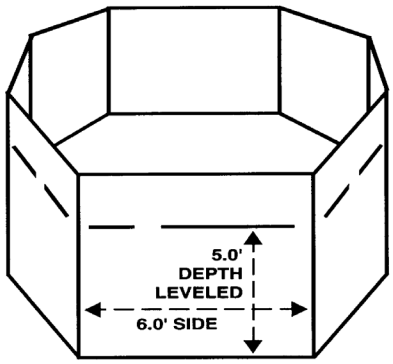

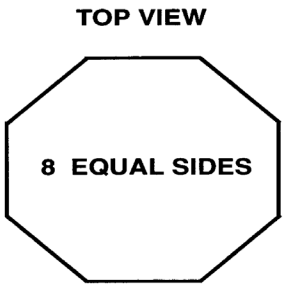

6.0^2 X 4.828 X 5.0 =
869.0 Gross Cubic Feet

E. Conical Pile

(1) Diameter squared times .2618 times depth (feet to tenths) equals Gross Cubic Feet.

10.2^2 X .2618 X 4.0 =
109.0 Gross Cubic Feet

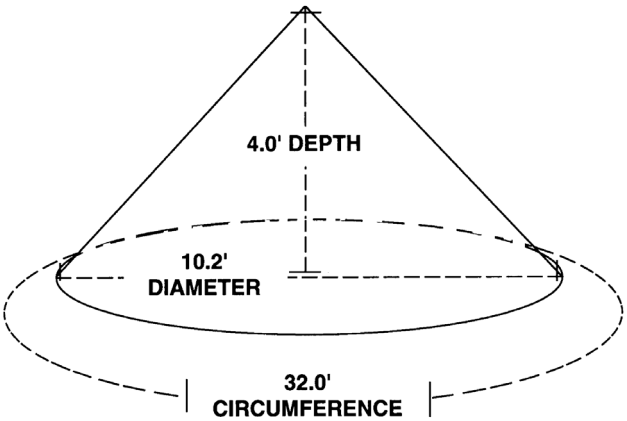

(2) When it is not possible to accurately measure the depth of a conical pile of grain the formula below may be used. The length of the slope^2 - the radius (1/2 the diameter)^2 = the height^2. Determine the square root of the result to determine the height of the cone in feet to tenths. Refer to exhibit 9 for square root table.

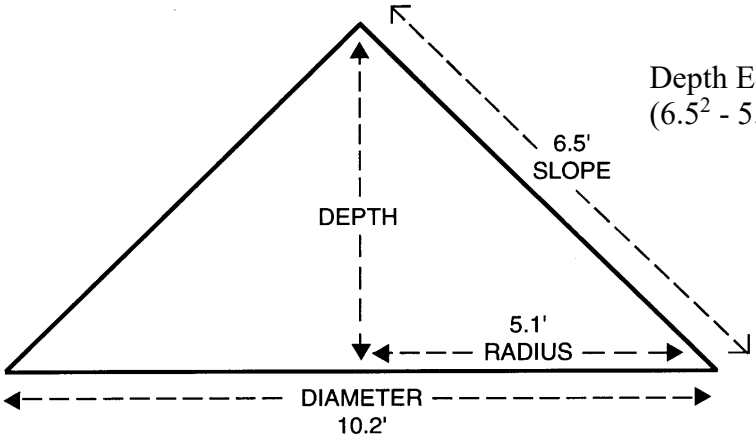

Depth Equals:
$(6.5^2 - 5.1^2)^{1/2} = 16.3^{1/2} = 4.0$ FT.

F. Other Symmetrical Structures

(1) Pentagon Structure (5 sides): Length of side squared times 1.720 times leveled depth equals gross cubic feet.

(2) Heptagon Structure (7 sides): Length of side squared times 3.634 times leveled depth = gross cubic feet.

(3) Nonagon Structure (9 sides): Length of side squared times 6.182 times leveled depth equals gross cubic feet.

(4) Decagon Structure (10 sides): Length of side squared times 7.694 times leveled depth equals gross cubic feet.

(5) Undecagon (11 sides): Length of side squared times 9.36 times leveled depth equals gross cubic feet.

(6) Dodecagon (12 sides): Length of side squared times 11.196 times leveled depth equals gross cubic feet.

(7) Use the formula for a circle for any structure with more than 12 sides.

1008 Gross Cubic Feet Formulas for Unusual Storage Configurations

A. Inverted Cone

(1) The dimensions of an inverted cone are recorded on the PW in the items used for recording structure measurements. "Cone" is entered in the column entitled "width" on the PW.

(2) If the inverted cone is a permanent part of a storage structure, record the measurements on a Special Report or other form used for measurement purposes, prior to harvest to be retained permanently with the insured's file folder. To record this information, ask the insured if any of the storage structures have an inverted cone while on a pre-harvest appraisal, AR review, GSI, etc. The manufacturer's or builder's specifications may be used if it is not possible to measure the inverted cone during the inspection. If these are not available, FSA may have measurements on record for the particular storage structure in question.

(3) Use the following formulas to determine the unadjusted gross production of grain in an inverted cone:

(a) Square: Length x width x 1/3 recorded depth equals gross cubic feet.
(b) Round: Diameter squared x .2618 x recorded depth equals gross cubic feet.
(c) Gross cubic feet minus deductions in cubic feet equal net cubic feet
(d) Net cubic feet times conversion factor equals unadjusted gross production.

A. Inverted Cone (continued)

(4) To determine gross production adjusted for TW, multiply the unadjusted gross production by the TW factor or the TWPF, as applicable (refer to paragraph 1107).

(5) Enter on the PW any adjustments necessary for correct computation of production; i.e., entries for FM, moisture, or quality if applicable.

B. Cone on a Cylinder

There will be two (2) line entries in the part of the PW used to record structure measurements.

(1) One line will be identified by "RND" (for production in A) with all determined measurements and adjustments entered for that line.

(2) One line will be identified as "Cone" (for production in B) with all determined measurements and adjustments entered for that line on the PW.

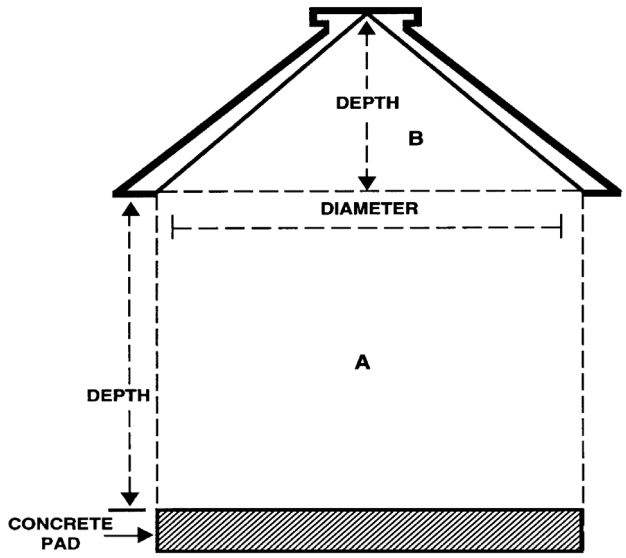

C. Pyramid

Length x width x height x one-third = gross cubic feet.

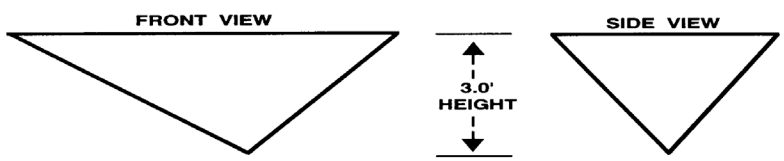

5.0 X 4.0 X 3.0 x .333 =
20.0 Gross Cubic Feet

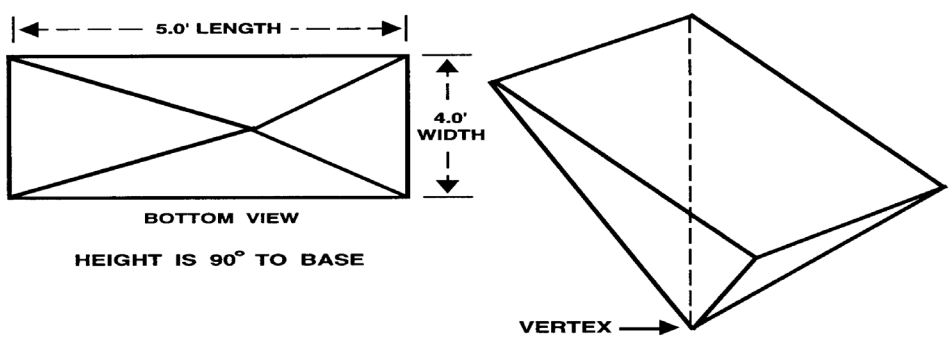

D. Triangle Box

Area of triangle (base x height x 1/2) x length of box = gross cubic feet.

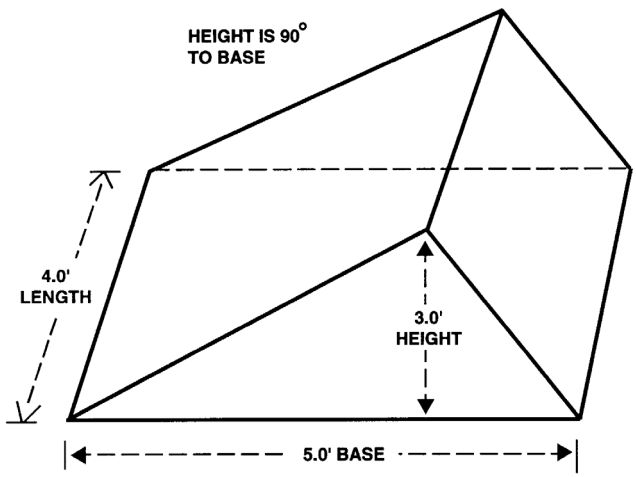

5.0 X 3.0 X .5000 X 4.0 =
30.0 Gross Cubic Feet

E. Production Not to Count in a Storage Structure

Example 1: This example shows structural measurements for the total production in the storage structure in the appropriate columns of the PW and the calculated gross production adjusted for TW (before deductions for moisture, dockage, etc.) in the "Production Not to Count" column. The calculated production not to count will be deducted and the TW entered in the "TW" column and any other applicable entries for moisture, dockage, or quality will be used to calculate the remaining grain contained in the structure to arrive at the unit PTC in the storage structure.

These measurements are recorded on the PW and production is calculated and entered as shown below:

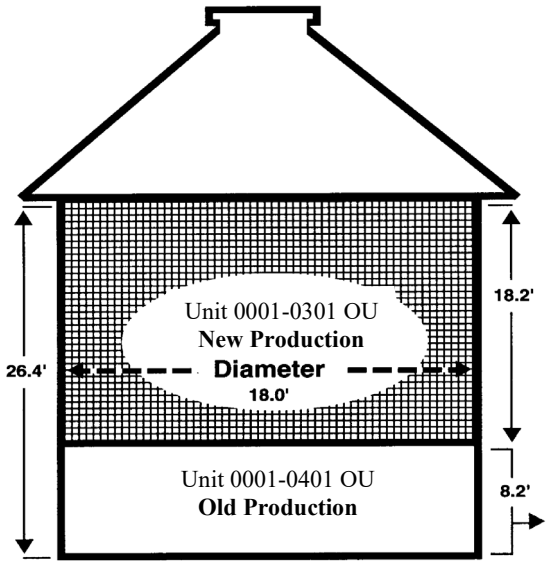

E. Production Not to Count in a Storage Structure (continued)

Harvested Production							
Length Or Diameter	Width	Depth	Deduction	Net Cubic Feet	Conversion Factor	Gross Production	Bu., Ton, Lbs., Cwt.
18.0	RND	26.4	N/A	6,718.0	0.8	5,374.4	N/A

Adjustments To Harvested Production					
Shell/Sugar Factor	FM % Factor	Moisture % Factor	Test Wt. Factor	Adjusted Production	Production Not To Count
			56.0	5,471.1	1,699.4
			1.018		

Narrative: Production not to count is from unit 0001-0401OU production. Unit 0001-0401OU production has a depth measurement of 8.2 ft. Bin measurements for unit 0001-0401OU attached.

Example 2: This example shows that the production not to count and PTC are determined separately. The depth measurement of only the PTC is entered in the "Depth" column. The measurement for the production not to count is entered in the Narrative of the PW.

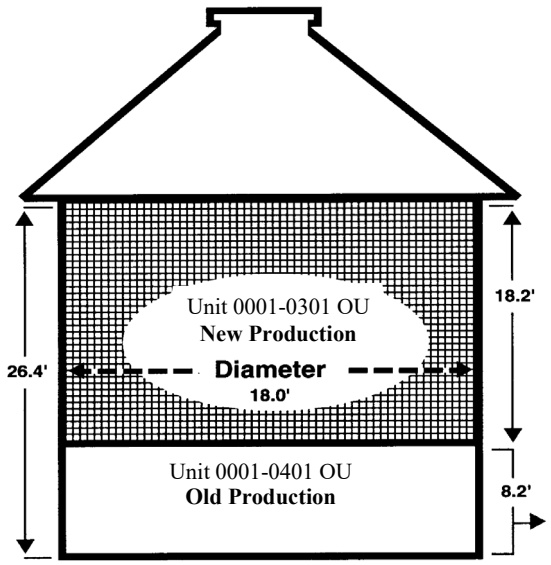

E. Production Not to Count in a Storage Structure (continued)

Harvested Production							
Length Or Diameter	Width	Depth	Deduction	Net Cubic Feet	Conversion Factor	Gross Production	Bu., Ton, Lbs., Cwt.
18.0	Rnd	18.2	N/A	4,631.3	0.8	3,705.0	N/A

Adjustments To Harvested Production					
Shell/Sugar Factor	FM % Factor	Moisture % Factor	Test Wt. Factor	Adjusted Production	Production Not To Count
			56.0	3,771.7	
			1.018		

Narrative: Production not to count from unit 0001-0401OU, depth 8.2 ft. Previous bin measurements for unit 0001-0401OU attached.

F. Gravity Flow Wagon

Break the gravity flow wagon into volume components which can be accurately measured and use the existing formulas to determine the production in each component.

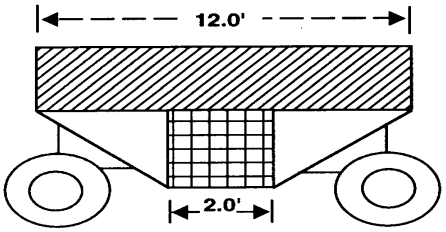

Top Rectangle Box = 12.0 X 6.0 X 2.0 = 144.0 Gross Cubic Feet (Lined Area)

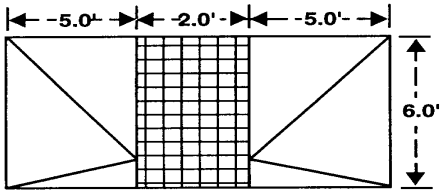

Middle Triangle Box = 6.0 X 3.0 X 2.0 X .5000 = 18.0 Gross Cubic Feet (Checkered Area)

2 Pyramids = 2 X (5.0 X 6.0 X 3.0 X .3333) = 60.0 Gross Cubic Feet (Unmarked Area)

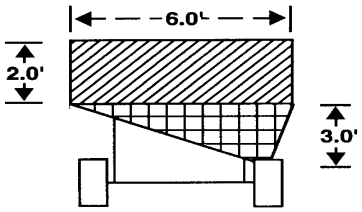

Total Gross Cubic Feet of Wagon = (144.0 +18.0 + 60.0) = 222.0

G. Flare Box Wagon

Break the flare box wagon into component parts which can be accurately measured and use the existing formulas to determine the production in each component.

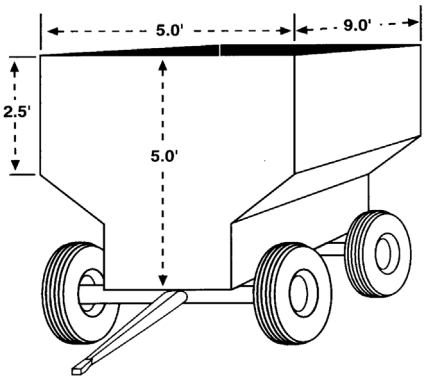

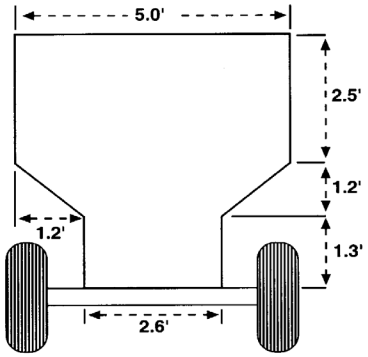

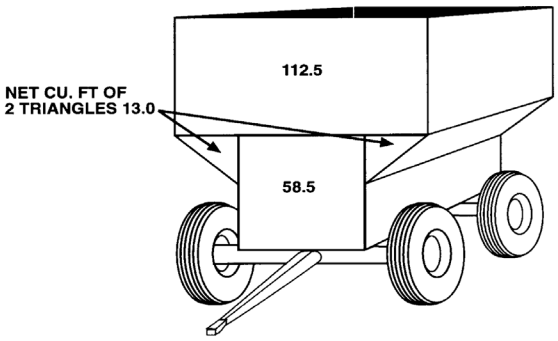

Net Cubic Feet of Component Parts

9.0 X 5.0 X 2.5 =	112.5 Cubic Feet
9.0 X 2.6 X 2.5 =	58.5 Cubic Feet
(9.0 X 1.2 X 1.2 X .5000) +	
(9.0 X 1.2 X 1.2 X .5000) =	+13.0 Cubic Feet
Total	184.0 Net Cubic Ft

H. Oval Storage Structure

Break the oval storage structure into component parts which can be accurately measured and use the existing formulas to determine the production in each component.

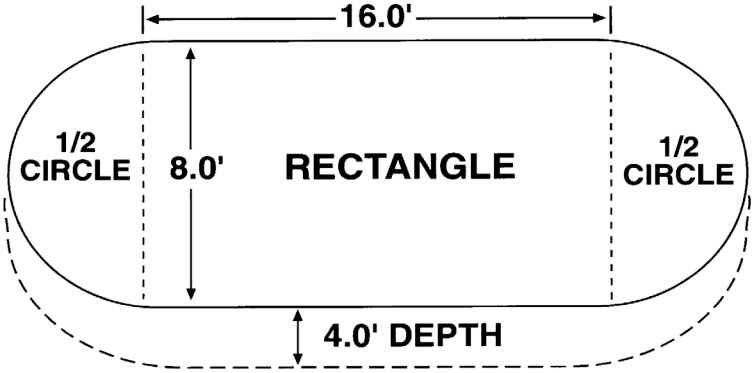

Rectangle 16.0’ X 8.0’ X 4.0’ = 512.0 Cubic Feet
Two 1/2 Circles - 8.0^2 X .7854 X 4.0 = 201.1 Cubic Feet (100.6 Cubic Feet for Each)
Total Cubic Feet = 713.1

1009 Net Cubic Feet Formula (Cubic Feet Deductions)

(1) Net Cubic Feet equals gross cubic feet minus cubic feet of deductions.

(2) Calculate net cubic feet by computing the cubic feet of studs, vents, etc., which displace the crop inside the structure and deduct that amount from the gross cubic feet.

(3) For regular type structures (round augers, square air vents, etc.) use the formulas given in paragraph 1006 and in (4) below to determine cubic feet deductions.

(4) To compute studs and joists which displace the crop:

(a) 2” x 4” - multiply the number of studs times depth of the stored crop and divide by 18.
(b) 2” x 6” - multiply the number of studs times depth of the stored crop and divide by 12.
(c) 2” x 8” - multiply the number of studs times depth of the stored crop and divide by 9.

Example: A bin with 30 studs (2" x 6") with a depth of 5 feet in the crop:

$$\frac{30 \times 5}{12} = 12.5 \text{ cu. ft.}$$

(d) Angled (diagonal, etc.) support studs should be calculated by dividing the total length of the studs by the appropriate factor.

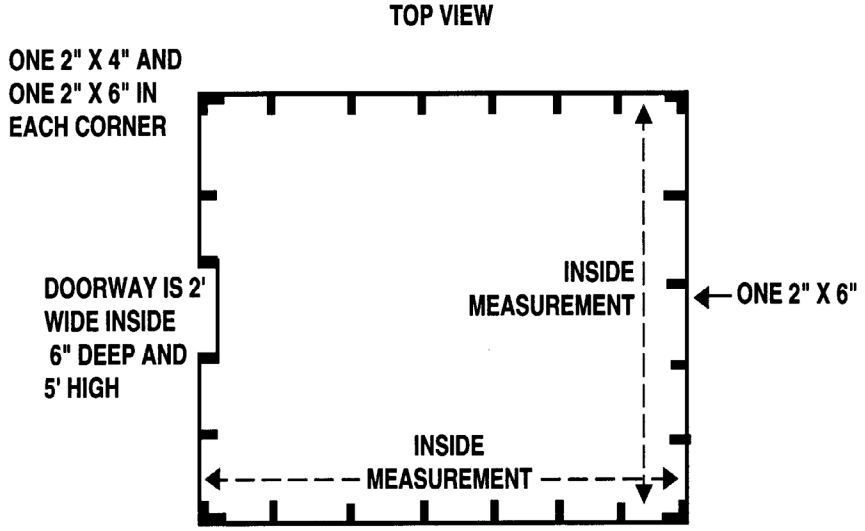

1010-1100 (Reserved)

PART 11 ADJUSTMENTS TO PRODUCTION

1101 General Information

(1) Adjustments are allowed for the following:

(a) Moisture when the moisture percentage meets the requirements stated in the CP or endorsement (unless specified otherwise in the SP). Refer to paragraph 1103 for more information.

(b) FM or Conspicuous Admixture or Admixture and/or dockage, as defined by FGIS, if due to insurable causes. Adjustment for any of these items can only be made if they meet all of the criteria specified in paragraph 1104.

(c) If there is a conflict about FM and /or dockage instructions between the LAM and the individual crop LASH, the LAM will prevail. Refer to paragraph 4.

(d) Low quality caused by an insurable cause of damage. Adjustment for quality is made only when deficiencies and conditions of the crop meet the requirements stated in the CP or endorsement to the crop (unless specified otherwise in the SP). Refer to paragraph 1102 for more information.

(2) Moisture and FM and/or dockage (if allowed in paragraph 1104) determinations may be made by:

(a) Grain handlers at commercial facilities that buy or store grain,
(b) FGIS Field Offices or FGIS-designated or delegated entities; or
(c) The adjuster. Refer to paragraphs 1103 and 1104 for more information.

(3) All deficiencies and conditions of the crop for which QA applies must have been graded or determined by the entity specified in the CP (SP or endorsement, if applicable). Test weights of farm-stored production may be determined by the adjuster as specified in paragraph 1107. Samples to make determinations cannot be obtained by the insured or insured's representative. Samples must be obtained by an adjuster or AIP-approved disinterested third party who is trained to take samples.

(4) Production disposed of before determinations are made:

(a) When the insured's interest is one hundred percent (100%) in the crop, adjustments in production for moisture, FM and/or dockage (as specified in paragraph 1104), or quality (quality adjustment) cannot be allowed for production disposed of before necessary determinations are made, unless sales or weight tickets show gross weight, moisture content, FM and/or dockage, and any other applicable deficiency.

(b) When the insured's interest is less than one hundred percent (100%) in the crop (applicable only when the other production is representative of the insured's share):

(i) Moisture or FM and/or dockage (as specified in paragraph 1104) can be allowed if:

(A) The production belonging to the other person sharing in the crop is available to make determinations, or

(B) Weight tickets are available which show gross weight, FM, and/or dockage, and moisture content.

(ii) Quality adjustment can be allowed only if:

(A) The production belonging to the other person is available for the adjuster to pull samples to be sent to an entity allowed in the applicable CP, SP, or endorsement to make determinations of deficiencies and/or substances or conditions injurious to human or animal health. Refer to paragraph 1102 for more information concerning quality adjustment; or

(B) A copy of records (tickets, slips, receipts or other records) from the other person's share of the crop is furnished and the records specify the deficiencies (and deficiency amounts) for which quality is allowed under the insurance contract. These records are only acceptable if the crop was delivered to a buying point where samples were pulled by a disinterested third party and were graded by an entity specified in the applicable CP, SP, or quality endorsement or option to the crop.

1102 Quality Adjustment

Some policies/endorsements provide for a reduction in the mature PTC when the quality of the appraised and/or harvested mature production is reduced due to insurable causes. The quantity of mature PTC is reduced when it meets the requirements stated in the crop policy/endorsement (SP, if applicable). This adjusted production is used for the indemnity and the APH Report for the same crop year, unless specified otherwise for the crop in the CIH procedures; e.g., an exception to this is potatoes.

A. Sample Requirements

(1) Samples can be obtained and submitted for grading/analyzing only by the adjuster or a person who is:

(a) A disinterested third party. The insured or insured's authorized representative are not considered disinterested third parties. Elevator or processor personnel at the buying point that are trained to pull samples are considered disinterested third parties.;

(b) Trained, to the AIP's satisfaction, how to extract representative samples (AIPs may assume that the person pulling samples at an elevator, processor, etc., is trained); and

A. Sample Requirements (continued)

(c) Approved by the AIP to obtain and submit the samples for grading. For claims involving mycotoxins or other conditions or substances injurious to human or animal health, refer to paragraph 1109.

(2) The following applies, unless samples involve production containing mycotoxins or other conditions or substances injurious to human or animal health. Refer to paragraph 1109 for sample requirements for mycotoxin-infected production.

(a) Adjuster-Obtained Samples from UH Production

(i) The minimum number of representative samples and size of the representative areas to be harvested must be at least the required number and size stated for appraisals in the applicable LASH.

(ii) Encourage insureds to harvest the representative areas in your presence. However, if an insured is unwilling or unable to harvest the selected representative areas in your presence, you must hand harvest the representative areas of the production to obtain the samples.

(iii) Identify the sample from each representative area, by unit number and field ID or subfield ID, if applicable. Refer to (3) below for information about sample size and transportation of samples.

(iv) If the quality of the production in the field or subfield of a unit appears similar, for the following crops only, the AIP may use a blended sample of all samples collected; however, the AIP may not have less than one graded blended sample per unit. This will apply to the following crops: barley, buckwheat, canola, corn, dry beans, dry peas, flax, grain sorghum, malting barley, millet, mustard, oats, peanuts, popcorn, rice, rye, safflowers, soybeans, sunflowers, wheat, and wild rice.

For all other crops, the AIP must have each sample graded (i.e., the use of blended samples is not an option), unless specified otherwise in the applicable crop LASH.

(v) If the quality in the field or subfield is not similar, then blended samples are not allowed. A grade is needed for each sample.

A. Sample Requirements (continued)

(b) Adjuster-Obtained Samples from Undelivered, Harvested Production

(i) If the insured has harvested the production and samples are taken from trucks, wagons, etc., prior to delivery, the adjuster should probe in different areas of the trucks, wagons, etc., to obtain a sample from each load. Each sample must be submitted for grading. However, when it is known or suspected that the production contains mycotoxins or other substances or conditions injurious to human or animal health, refer to subparagraph 1109F(2)(d) for instructions specific to obtaining a representative sample from a conveyance for the purpose of submitting for testing for mycotoxins or other substances or conditions.

(ii) If the production is stored, obtain the sample from the storage structure for all QA factors other than mycotoxins (refer to Vomitoxin exception in following sentence) or other substances or conditions injurious to human or animal health, or any other type of damage specified in the individual Crop LASHs. (Vomitoxin Exception: The AIP may obtain samples from the storage structure to determine Vomitoxin levels refer to paragraph 1109 for additional information.) Identify samples by bin ID and unit number. If the production has been commingled between units, refer to paragraph 1233. Use a probe (may need an extension) or other means to extract samples from various depths and areas of the storage structure and combine into one sample. Extract enough samples to ensure the combined sample will be representative of all production in the storage structure. A sample from each storage structure must be submitted for grading.

(c) Samples from Harvested and Delivered Production

(i) Unblended samples are to be pulled from each conveyance. If each sample is graded, these are considered unblended samples. For unblended samples, separately determine the QA factors for each conveyance. Refer to the GSH for the definition of conveyance.

(ii) Blended samples may be accepted for the following crops, unless specified otherwise in the individual crop LASHs: barley, buckwheat, canola, corn, dry beans, dry peas, flax, grain sorghum, malting barley, millet, mustard, oats, peanuts, popcorn, rice, rye, safflowers, soybeans, sunflowers, wheat, and wild rice.

Grades from blended samples, by unit, for non-mycotoxin quality adjustment, (for mycotoxin QA, refer to paragraph 1109), may be accepted from USWA licensed warehouses and warehouses holding a storage agreement with CCC only if all of the following apply:

A. Sample Requirements (continued)

(A) The commodity is sold on the same basis as the blended samples used to determine the grading factors for quality adjustment.

(B) Proof of the sale, sale amount and grades, or signed written certification of pending sale from the buyer including the quantity and quality is provided and is acceptable to the AIP.

(C) The blended sample is representative of all the loads for which it applies, and it is determined acceptable by the AIP.

(iii) In no circumstances will grades from improper blending methods such as the following be accepted:

(A) A sample from each conveyance, regardless of producer, is put into one container and then a sample is taken from the container at the end of the day or the week. The grade from that sample is applied to each producer's production who delivered grain during that time.

(B) On a basis greater than the unit structure the insurance is based (BU, OU, WFU, EU, EP, or MCEU, as applicable), all samples from a single insured are put into a container and then a single sample is taken from this producer's container when harvest for the crop is completed or when otherwise directed by the insured. The grade from that sample is applied to all of that insured's production.

(C) A single sample is taken from one conveyance for the producer. The grade from that sample is applied to all of that producer's production.

(3) For sample size and transportation, follow the instructions provided by the entity specified in the CP to grade samples in regard to sample size, container, and transportation to ensure the integrity of the sample(s).

(4) For crops administered under the USGSA or the Agricultural Marketing Act, adjuster-obtained samples can only be submitted to FGIS, AMS, or their designee, as applicable for the crop, or a grain grader as noted in subparagraph 1102B who can grade submitted samples. For state licensed graders, this can vary from state to state. Inquire at the individual warehouse or at the appropriate State office for this information.

(a) Crops administered under USGSA are, as follows: barley, canola, corn, flaxseed, oats, rye, grain sorghum, soybeans, sunflower seed, and wheat.

(b) Insurable crops administered under the Agricultural Marketing Act include but not limited to the following: dry beans, lentils, dry peas, rice, safflowers; (check individual CP).

A. Sample Requirements (continued)

(c) Contact the nearest FGIS field office for the location of the nearest facility that can give a grade for submitted samples for the applicable crop. A list of FGIS Field Offices (listing the locations of the official service providers/official inspection sites) can be found at the GIPSA Internet site or a link can be found on the RMA website, located where the LASHs are located. Not all listed facilities are licensed to grade all commodities. If you are unsure of whether the facility is licensed to grade the crop, check with the facility before submitting the sample.

B. Determining Quality of Most Crops for Quality Adjustment Purposes

If the crop qualifies for QA based solely on a test weight determination made by the adjuster, AIPs are highly encouraged to obtain additional quality determinations from the entity specified in B (1) or (2) for the respective crop.

(1) For canola, coarse grains (corn, grain sorghum, and soybeans), small grains crops (barley, buckwheat, flax, oats, rye, and wheat), and sunflowers, deficiencies in quality (test weight may be determined by the adjuster, including the use of the test weight to determine the grade, if applicable) must be analyzed by a:

(a) Grain grader licensed under the USGSA or the USWA;

(b) Grain grader licensed under State law and employed by a warehouse operator who has a storage agreement with the CCC; or

(c) Grain grader not licensed under State law, but who is employed by a warehouse operator who has a commodity storage agreement with the CCC and is in compliance with State law regarding warehouses.

(2) For dry beans, dry peas, rice, and safflowers, deficiencies in quality (test weight may be determined by the adjuster, including the use of the test weight to determine the grade, if applicable) must be made by a grader:

(a) Licensed under the United States Agricultural Marketing Act or the USWA,

(b) Licensed under State law and employed by a warehouse operator who has a storage agreement with the CCC; or

(c) Not licensed under State law, but who is employed by a warehouse operator who has a commodity storage agreement with the CCC and is in compliance with State law regarding warehouses.

(3) In regard to substances or conditions injurious to human or animal health, production samples of the crop must be analyzed by a laboratory that meets the required criteria for an AIP-approved testing facility (laboratory) as outlined in subparagraph 1109H.

B. Determining Quality of Most Crops for Quality Adjustment Purposes (continued)

(4) Information About USWA and Location of USWA Licensed Warehouses

(a) A facility licensed under the USWA must have individuals on site who are licensed to weigh, inspect, or grade specific commodities, and may only give a grade for production that is delivered to that warehouse for storage or handling. Warehouse employees licensed to grade specific commodities under the auspices of the USWA cannot provide grades for samples submitted for grading purposes only. A link to a listing of licensed warehouses, the city and the applicable crops can be found on the RMA website, located with the LASHs.

(b) Each warehouse is only licensed for certain types of commodities. For example, a warehouse licensed for grain only cannot inspect, weigh, or grade dry beans.

Refer to the applicable individual crop LASH, CP, endorsement or option (if applicable), or SP for specific QA qualifications and provisions.

(5) A link to the locations of warehouses with a CCC, Uniform Grain and Rice Storage Agreement (UGRSA) can be found on the RMA website with the LASHs.

C. Determining Quality of Other Crops

(1) For crops other than those specified in subparagraph B above that have quality adjustment provisions, the CP (or endorsement, if applicable) may allow various factors of quality to be determined by the processor, State grader, or USDA grader, or may not specify who grades the crop but only requires that the crop be graded in accordance with specified U.S. standards for fresh fruit, dried fruit, standards set forth in Marketing Orders, or standards set up by other industry standards, etc.

Example: Samples of mustard must be analyzed in accordance with the Directive for Inspection of Mustard Seed, provided by the FGIS or such other directive or standards that may be issued by FCIC, or by a laboratory approved by the AIP.

(2) When CP (or endorsement, if applicable) do not specify a specific entity to grade the crop but only specifies that the crop meet or not meet certain standards in order to qualify for quality adjustment, the AIP must ensure the entity grading the crop is qualified to do so (i.e., if an adjuster is making quality determinations for the crop, the adjuster must have received adequate training to make such determinations). A licensed State or Federal grader is qualified to make grade determinations. If the CP specify the deficiencies identified by the processor are acceptable, the entity that grades for the processor is assumed to be adequately trained. Refer to the applicable LASH and/or crop policy/endorsement for specific quality adjustment qualifications and provisions.

C. Determining Quality of Other Crops (continued)

(3) When there is farm-stored production or UH mature production, only adjusters can obtain samples for quality determination purposes, unless specified otherwise in the CP or SP.

D. Recording Test Weights

In most cases, grain handlers determine test weight to tenths of a pound. Unless specified otherwise in a LASH, test weights are recorded to tenths on the PW. If the grain handler does not determine the test weight to tenths of a pound, the test weight is still entered to tenths on the PW (e.g., if the weight is shown as 42 pounds, enter the test weight as "42.0"). Pounds rounded to whole pounds can cause grain to appear to be ineligible for quality adjustment; e.g., oats having an actual test weight of 26.5 would be eligible for quality adjustment, but when the weight is entered on the PW as a rounded weight (27 pounds), it does not appear to qualify. Therefore, if quality is an issue and the grain handler has shown test weight in whole pounds, determine if the handler has the weight in tenths of a pound.

E. Crops with Quality Adjustment Charts in the Special Provisions

(1) On the date of final inspection for the unit, if unsold production qualifies for quality adjustment under sections B or C1 or C2 of the SP, claims will be settled using the applicable DFs for unsold production unless the insured has elected in writing to delay settlement of the claim for up to 60 days after the calendar date for the EOIP. If the grain is sold during this delay, the claim will be settled using the RIV. The insured may request at any time during this delay in settlement, to settle the claim using the applicable DFs for any unsold production. For any production sold to other than a disinterested third party, or that is not sold 60 days after the calendar date for the EOIP, the claim will be settled using the applicable DFs. If the insured does not elect to delay settlement of the claim for unsold production, the AIP may settle the claim for any sold and/or unsold production on the date of final inspection for the unit using the applicable DFs. If the time to harvest has been extended, the option to delay settlement of the claim will not apply beyond 60 days after the calendar date for the EOIP.

(2) If it is determined that an insured was prevented from harvesting by the calendar date for the EOIP due to an insurable cause of damage that occurred during the insurance period, and an extension of time to harvest was allowed, the time to determine insurable quality deficiencies will also be extended. If the crop was harvested prior to 60 days after the calendar date for the EOIP, the claim will be settled in accordance with sections A, B, or C of the SP, as applicable, unless the insured elected to delay settlement of the claim, in which case, refer to (1) above. If the insured was unable to harvest the crop until after 60 days after the calendar date for the EOIP, and the production qualifies for quality adjustment under sections B1, C1a or C2ai of the SP, the insured will be allowed 30 days after harvest to market the grain and receive an RIV.

E. Crops with Quality Adjustment Charts in the Special Provisions (continued)

If the production qualifies solely under section A of the SP, only the DF(s) in section A will be used. If the production is not sold within this 30-day period, the claim will be settled using the applicable pre-established DFs. The insured must complete and submit a claim for indemnity not later than the earlier of 60 days after harvest, or 60 days after the date the AIP determines the crop could have been harvested and the insured did not harvest. If the production qualifies under section C3 of the SP, the claim will be settled as specified in section C3.

(3) If the insured elected to delay measurement of farm-stored production as provided in the Basic Provisions, all samples of farm-stored production used to determine insurable quality deficiencies must be obtained in accordance with the Quality Adjustment Statements of the SP, but not later than 60 days after the EOIP, otherwise such production will not be adjusted for quality. All samples obtained to test for substances or conditions injurious to human or animal health (other than Vomitoxin) must be taken prior to production entering storage. The gross amount of production will be determined by the AIP not later than 180 days after the EOIP. The claim will be completed and submitted no later than 30 days after the 180th day.

(4) For barley (not applicable to malting barley insured under the Malting Barley Endorsement), canola, corn, flax, grain sorghum, oats, rye, safflowers, soybeans, sunflowers, and wheat production that is eligible for QA, the QAF is determined by subtracting from 1.000, the sum of all applicable DFs expressed as three-place decimals. DFs are either:

(a) pre-established DFs shown in the SP, or
(b) when there are no pre-established DFs for the types/levels of damage on a chart in the SP, the DFs are derived from reasonable RIVs applied by the buyers of the sold production only if the production is sold prior to 60 days after the calendar date for the EOIP, except production with the type/level of damage shown in section C3 of the SP and as stated in subparagraph 1109N(5)(b) herein, and production described in (2) above.

The QAF (not less than 0.000) is multiplied by the number of bushels or pounds remaining after any reduction due to excess moisture (in accordance with the CP).

(5) If the reasonable RIV applied by the buyer can be decreased by conditioning the production, the RIV after conditioning may be increased by the cost of such conditioning provided the resulting RIV does not exceed the RIV before conditioning. The RIV and local market price are determined on the date such quality adjusted production is sold to a disinterested third party.

(6) ZMV occurs when no buyers in the local area are willing to purchase the production and fair consideration to deliver production to a market outside the local marketing area (distant market) is equal to or greater than the production's value at the distant market.

E. Crops with Quality Adjustment Charts in the Special Provisions (continued)

(a) If on the date of final inspection for the unit, any production, which due to insurable causes, has ZMV will not be considered PTC if the production is destroyed in a manner acceptable to the AIP. Refer to subparagraph H regarding steps for making final inspection determinations of ZMV.

(b) In lieu of destruction of ZMV production, the ZMV production may be gleaned provided the criteria stated in paragraph 904 are met. The method of destruction must result in the production having no possibility of being marketed or fed or any possibility of a salvage use that could result in any type of compensation to the insured. Refer to subparagraph H for exceptions to the requirement to destroy the ZMV crop.

(7) Fair consideration to deliver sold production to a distant market is allowed only for the types and levels of damaged production included in sections B1, C1a, C2a, C3a, and C3b of the SP and is not allowed for production fed or used in a manner other than feed. Applicable fair consideration is added to the RIV.

(8) Section A of the SP contains pre-established DFs. Additional DFs due to substances or conditions identified as injurious to human or animal health as stated in section C of the SP may apply if applicable. Refer to paragraph 1109 for procedure pertaining to section C of the SP.

(a) Other than to consider whether the damaged production is ZMV, as described in (6) above, fair consideration to deliver the production to a market outside the insured's local marketing area (distant market) is not considered, regardless of the market value of the grain; (i.e., the pre-established DF cannot be adjusted for the amount of fair consideration to deliver the production to a distant market). Additionally, conditioning costs are not allowed when the only types and/or levels of damage or grade are ones for which there are pre-established DFs on section A charts in the SP.

(b) When due to insured deficiencies, there are no buyers in the insured's local market area but there are buyers in distant markets and after fair consideration, the AIP determines that the production is:

(i) ZMV (section D of SP) and the insured:

(A) Destroys the production in a manner acceptable to the AIP, the DF will be 1.000, resulting in zero PTC.

(B) Destroys the production in a manner not acceptable to the AIP or makes no attempt (or refuses) to destroy the production, then such production is no longer considered ZMV and the applicable pre-established DFs on the charts in section A of the SP for the level or type of damage (without adjustments for fair consideration) will be used to determine the QAF to adjust the PTC.

E. Crops with Quality Adjustment Charts in the Special Provisions (continued)

(ii) Greater than ZMV, the applicable pre-established DFs for the level or type of damage in section A of the SP (without adjustments for fair consideration) will be used to determine the QAF to adjust the PTC.

(9) Pre-established DFs from the Chart in section A of the SP

(a) When there is a pre-established DF for the individual type/level of damage (such as, test weight, kernel damage, etc.) as shown on the chart in section A of the SP, the pre-established DF must be used to establish the QAF, unless ZMV applies.

(b) Besides DFs for the individual type/level of damage (e.g., test weight, kernel damage, etc.) there may also be a DF for grade. The individual type/level of DFs should be added to the DF for grade (if the grain qualifies for the grade DF). The grade DF factor is not used in combination with RIVs.

(i) The DF for the U.S. NO. 5 grade DF is applicable to wheat and barley only. Use this DF plus any applicable pre-established DFs for wheat Falling Numbers and wheat and barley Special Grade Discounts contained in the SP. The DFs for US No. 5 and U.S. Sample grade cannot be added together.

(ii) The DF for Sample Grade is applicable to barley, canola, corn, flax, grain sorghum, oats, rye, soybeans (test weight is not a grading factor for soybeans), sunflowers (oil-type only), and wheat. Safflowers do not have a DF for Sample Grade. Use the DF for Sample Grade plus any applicable pre-established DFs for other quality deficiencies. The DFs for U.S. No 5 and U. S. Sample grade cannot be added together.

(iii) Special grade (as shown on the grade certificate) of light smutty (wheat), smutty (wheat, oats) or garlicky (barley, oats, wheat) DFs may be used separately or in addition to U.S. NO. 5 or Sample Grade DF.

(iv) DFs for specific allowable Sample Grade defects such as musty, sour, or commercially objectionable foreign odors (barley, canola, corn, flax, grain sorghum, oats, rye, soybean, sunflower, safflower, and wheat) will be used in addition to the Sample Grade DF.

(v) DFs for grade can be used in combination with DFs for Mycotoxins or other substances or conditions that are injurious to human or animal health Refer to section C of the SP and paragraph 1109.

E. Crops with Quality Adjustment Charts in the Special Provisions (continued)

(c) If there is a type/level of damage or grade for which there are pre-established DFs shown in section A of the SP and at least one type/level of damage for which section B of the SP would be applicable do not use the pre-established DF(s) on the chart in section A of the SP. In this case, the QA factor is established as stated in section B of the SP.

(10) Section B of the SP and other applicable SP Sections:

For a type or level of deficiency not shown in Section A, DFs will be determined from section B, or section C if the production contains Mycotoxins or other substances or conditions injurious to human or animal health as follows:

(a) For production that is sold (bids cannot be used) to a disinterested third party (as verified by the AIP), the DF will be the reasonable RIV applied by the buyer due to all insurable quality deficiencies and that value divided by the local market price. If the RIV is determined to not be reasonable, the AIP must determine a reasonable RIV based on discounts applied by other buyers in the area (or a distant market, if necessary) for similar types and levels of damage.

(b) The DF will be .500 (plus applicable DFs from section C of SP) for all production not sold prior to 60 days after the calendar date for the EOIP (or sold to other than a disinterested third party), unless the insured elected to delay settlement of the claim. If the insured sells the production during this delay, the claim will be settled based on the RIV. During the delay, the insured may elect to settle the claim based on the RIV for sold production and/or the applicable DF for unsold production.

(c) Production remaining unsold 60 days after the calendar date for the EOIP

(i) A DF of .500 (plus applicable DFs from section C of the SP) will be used to settle the claim for indemnity.

(ii) An automatic extension of time will be allowed for the insured to submit the claim for indemnity, not to exceed 90 days after the calendar date for the EOIP. (This does not limit the insured's ability to request an additional extension of time to submit a claim for indemnity in accordance with section 14 of the BP.)

(d) Determining DFs for Production with ZMV Production (section D of the SP).

(i) Use a DF of 1.000 for production determined by the AIP to have a ZMV, provided the production is destroyed in a manner acceptable to the AIP.

(ii) Use a DF of .500 for production the AIP determines has ZMV but the insured did not destroy the production in a manner acceptable to the AIP or the insured makes no attempt (or refuses) to destroy the production.

E. Crops with Quality Adjustment Charts in the Special Provisions (continued)

(11) DFs Derived from RIVs (sections B1, C1a, C2ai, C3ai, and C3bi of the SP)

(a) DFs are derived from RIVs by dividing the total RIVs (dollars and cents) by the LMP and rounding the result to three decimal places.

(b) The LMP is defined in the applicable CP. In extenuating circumstances, the LMP may be difficult to determine or appears to be unreasonable because of unusual market conditions in the region; e.g., wide-spread high levels of Aflatoxin. Under these circumstances, the daily Posted County Price for the applicable commodity issued by FSA may be used as a tool to assist in establishing the LMP along with LMPs from areas outside the local market area.

(c) If the RIV for each qualifying deficiency cannot be established from the buyer, the RIV will be the difference in the price the insured has received and the LMP (excluding any RIV as stated in (12)(f) below). When determining allowable RIVs, it is not necessary to determine the actual price of the production if the buyer is able to specifically provide the RIVs to the adjuster's satisfaction.

(12) Use all of the following when establishing RIVs (sections B1, C1a, C2a. C4a. and C4b of the QA statement in the SP):

(a) RIVs and LMPs will be those in effect on the date the production was sold to a disinterested third party as verified by the AIP. Bids cannot be used. Production must have been sold prior to 60 days after the calendar date for the EOIP for the crop, except for production as stated in subparagraph 1109N(5)(b). Refer to paragraph 1109 for QA procedures when grain contains mycotoxins or other substances or conditions injurious to human or animal health.

(b) The RIV is based on the same kind and class of crop that is insured.

(i) Production remaining unsold 60 days after the calendar date for the EOIP (Commercially Stored, Farm-Stored, or Appraised Mature Production) except for production as stated in subparagraph 1109N(5)(h)(iii) and (iv), and production described in (2) above.

(ii) Production fed or used in a manner other than feed.

(iii) Production that is determined to be ZMV.

Note: Production not qualifying for an RIV will be quality adjusted using pre-established DFs.

E. Crops with Quality Adjustment Charts in the Special Provisions (continued)

(c) RIVs do not apply to:

(d) Conditioning Costs (subparagraph 7(f)(iii) in the General Statements of the Quality Statements in the SP: If an RIV can be decreased by conditioning the production, the RIV after conditioning may be increased by the cost of conditioning, provided the result does not exceed the RIV before conditioning). Refer to subparagraph G(11) below.

(e) Fair Consideration to deliver production qualifying under the QA Statements of the SP (sections B1, C1a, C2ai, C3ai, C3bi), and if a lower RIV is available at a market outside the insured's local marketing area (distant market), the RIV may be increased by the additional costs to deliver and sell the production to a distant market; provided the result does not exceed the RIV in the insured's local marketing area. The additional costs must be usual, reasonable, and customary. In accordance with the General Statements of the Quality Provisions in the SP, fair consideration is not allowed for production fed or used in a manner other than feed or when a pre-established DF is applicable.

(f) No RIV is allowed if it is due to moisture content, damage due to uninsured causes, drying, handling, processing, or any other cost associated with normal harvesting, handling, and marketing of the production.

(g) Contracted production as used in the context of this procedure refers to speculative-type contracts not processor contracts, except for specialty use barley and soybean types. These procedures relating to specialty use barley or soybean types apply to either speculative or a processor contracts. A processor contract for specialty barley and soybean types must be in place in order to insure production using the contract price. For specialty use barley or soybean types, quality adjustment will be provided as specified in the CP and SP. No additional quality adjustment will be made for any specialty type.

(i) If the contracted production has been sold (contract fulfilled) prior to 60 days after the calendar date for the EOIP and the buyer was a disinterested third party:

(A) The RIV will be the RIV applied by the buyer (who had the contract with the insured) unless the RIV is not usual, reasonable, and customary. If the RIV is not usual, reasonable, and customary, the RIV will be determined from the LMP as shown below.

Example: Assume the base price for the contracted wheat is $4.50, and the LMP in the local market area is $3.00. The $3.00 will be used to determine the QAF.

E. Crops with Quality Adjustment Charts in the Special Provisions (continued)

Contracted wheat - RIV: Production delivered October 1, and the buyer applied a RIV of $2.00 to the contracted wheat due to the 43-pound (low) test weight. There were no other RIVs applied by the buyer.

Non-contracted wheat RIV - Production is delivered October 1 and the same buyer applied an RIV of $1.00 to non-contracted wheat due to the 43-pound (low) test weight. There were no other RIVs applied by the buyer.

In this case, the $2.00 RIV for the low test weight wheat was applied by the buyer for the contracted and delivered grain. The $2.00 RIV for contracted grain was not comparable to the $1.00 RIV in the local market area for non-contracted wheat with the same test weight. The CP defines local market price as the cash grain price offered by buyers in the area in which the insured normally markets the insured crops. The $1.00 RIV will be used to compute the QA factor since it is usual, reasonable, and customary. $1.00 (RIV) ÷ $3.00 (LMP) = .334 (DF). 1.000 - .334 = .666 QAF.

(B) For contracted crops with production that has been sold prior to 60 days after the calendar date for the EOIP use the RIV applied by the buyer at the time of final compensation.

(ii) No RIV can be used for any portion of the contracted production that was sold 60 days after the calendar date for the EOIP or that remains unsold. The pre-established DF of .500 must be used as stated in section B of the SP.

(13) Refer to paragraph 1109 for claims involving mycotoxin infected production or production containing other substances or conditions injurious to human or animal health that exceed the maximum amounts allowed by the FDA or other public health organization of the United States or agency of the applicable State (also, refer to section C of the SP).

F. Examples for determining QAFs with DFs

If there are multiple loads of production with the same QAFs, these loads can be consolidated on one line in the part II of the PW only if the other information (such as, FM and/or dockage, and moisture) is the same. QAFs cannot be less than 0.000 or greater than 1.000.

F. Examples for determining QAFs with DFs (continued)

Example 1: Crop only qualifies for the pre-established DF for grade on the chart (section A of the SP)

Soft Red Wheat with a test weight of 54 pounds and fifteen percent (15%) defects is designated as U.S. No. 5 wheat. There is no pre-established DF on the chart for a 54 pound test weight or fifteen percent (15%) defects for soft red wheat (this test weight exceeds the point at which pre-established DFs begin for test weight), and there is no pre-established DF for fifteen percent (15%) defects (fifteen percent (15%) defects exceed the point at which pre-established DFs begin for defects); however, the 15% defects do cause the wheat to grade U.S. No. 5 which qualifies the wheat for quality adjustment. The grade DF for U.S. No. 5 wheat is .320.

(a) .320 (DF for U.S. No. 5 Soft Red Wheat)
(b) 1.000 - .320 = .680 QAF

Example 2: Type/level of damage with a pre-established DF on the chart

Wheat has been sold prior to 60 days after the calendar date for the EOIP and only one type/level of damage (garlicky grade) qualified for quality adjustment. Since this type of damage has a pre-established DF on the chart (section A of the SP, the QAF is determined as follows:

(a) .051 DF (for garlicky grade)
(b) 1.000 - .051 = .949 QAF

The following examples assume the insured did not elect to delay settlement of the claim for any unsold production and an extension of time to harvest and RIVs was not applicable as described in subparagraph E(2) above.

Example 3: Individual pre-established DFs are applied. The crop does not qualify for a grade discount under section A of the SP. Corn was sold prior to 60 days after the calendar date for the EOIP. Corn has kernel damage (12%) and test weight (47 pounds) per bushel and is designated as U.S. No. 5 corn. The test weight and kernel damage DFs would only be applied to arrive at the QAF. Grade discounts do not begin until the corn grades U.S. No. Sample grade.

(a) .072 (DF for 12% kernel damage)
+ .051 (DF for 47 lbs. test weight)
.123 Total DFs

(b) 1.000 - .123 = .877 QAF

The QAF is .877 because ALL quality deficiencies fall under section A of the SP, and it does not matter when the grain was sold (i.e. before or on or after the 60 days of calendar date for the EOIP) since it did not have ZMV.

F. Examples for determining QAFs with DFs (continued)

Example 4: Same scenario for corn as in example 3, except the corn remains unsold 60 days after the calendar date for the EOIP and the production did not have ZMV. The answer is the same as in example 3 because all quality deficiencies fall under Section A of the SP; i.e., pre-established DFs on the chart for the type/levels of damage.

Example 5: Same scenario for corn as example 3, except corn was sold to the insured's father.

The answer is the same as in example 3 because ALL quality deficiencies fall under section A of the SP (i.e., pre-established DFs on the chart for the type/levels of damage.

Example 6: Corn has twelve percent (12%) kernel damage (Pre-established DF on chart – section A of SP) and a test weight of 39 pounds (No pre-established DF for 39 pound test weight- section B of SP). The insured's production remains unsold on the 60th day or later after the calendar date for the EOIP; therefore, a .500 DF is applicable. The QAF is determined as follows:

(a) DF is .500
(b) 1.000 - .500 = .500 QAF

The QAF is .500 because the quality deficiencies fall under section B of the SP, and section B requires a DF of .500 when the production remains unsold 60 days after the calendar date for the EOIP.

Example 7: Same scenario for corn as in example 5, except the insured feeds the damaged corn prior to 60 days after the calendar date for the EOIP. Therefore, the production was unsold production. A .500 DF is applicable.

(a) DF is .500
(b) 1.000 - .500 = .500 QAF

The QAF is .500 because the production is fed (unsold) and quality deficiencies fall under section B of the SP.

F. Examples for determining QAFs with DFs (continued)

Example 8: Same scenario for corn as in example 5, except the insured sells the corn prior to the 60 days after the calendar date for the EOIP to his neighbor. The LMP is $2.40/bu.

(a) Scenario 1 – The neighbor pays the insured $0.25 for the corn. This would equate to a RIV of $2.15 ($2.40 - $0.25). The AIP determines the neighbor meets the definition of disinterested third party as found in the BP. However, the AIP determines the $2.15 RIV applied by the neighbor is not reflective of the RIV applied by other buyers in the local market. Since the RIV applied by the neighbor is not reflective of the RIV in the local market, the AIP must deem the neighbor as NOT a disinterested third party in accordance with the definition for "disinterested third party" contained in the SP. A .500 DF is applicable. Therefore, the QAF is as follows:

(i) DF is .500
(ii) 1.000 - .500 = .500 QAF

The QAF is .500 because the quality deficiencies fall under section B of the SP and the buyer is NOT a disinterested third party.

(b) Scenario 2 – In this scenario, the neighbor buys the corn for $.75/bu. The AIP determines the neighbor is a disinterested third party because:

(i) The neighbor meets the definition for a disinterested third party in the SP.

(ii) The $1.65 RIV ($2.40 - $.75) applied by the neighbor is reflective of the RIVs applied by buyers in the local market. Therefore, the QAF is as follows:

(A) $1.65 (Total RIV) ÷ $2.40 LMP = .688 DF
(B) 1.000 - .688 = .312 QAF

The QAF is .312 because the quality deficiencies fall under section B of the SP and the buyer is a disinterested third party. Therefore, the DF used to determine the QAF is derived from the actual RIV applied by the buyer.

F. Examples for determining QAFs with DFs (continued)

Example 9: Individual pre-established DFs applied in combination with pre-established DF for grade (section A of the SP)

Corn with kernel damage (25%) and test weight (47 pounds) is designated as U.S. Sample Grade (kernel damage qualifies). The individual kernel damage DF's and test weight DFs would be applied in combination with the U.S. Sample Grade DFs. The corn was sold to a disinterested third party (as verified by the AIP) prior to 60 days after the calendar date for the EOIP. The QAF is determined as follows:

(a) .255 (DF for 25% kernel damage)
.051 (DF for 47 lbs. test weight)
+ .077 (DF for Sample Grade)
.383 Total DFs

(b) 1.000 - .383 = .617 QAF

Example 10: Same quality deficiencies as Example 9, except during the period prior to 60 days after the calendar date for the EOIP, the corn is determined to have ZMV. At the time of inspection, the insured does not want to destroy the production at that time. There are three possibilities that can occur, as follows:

(a) If the insured destroys the corn in a manner acceptable to the AIP, the QAF is determined as follows:

(a) DF is 1.000
(b) 1.000 - 1.000 = .000 QAF

(b) If the insured destroys the corn but does not destroy it in a manner acceptable to the AIP or refuses to destroy the corn, the corn must be determined not to be ZMV, and the claim is settled in the same manner as in Example 9 above.

(c) A buyer for the corn has been found. Because there is a market, the corn is determined not to be ZMV. The claim is settled the same as in Example 9 above:

F. Examples for determining QAFs with DFs (continued)

Example 11: Combination of type/level of damage with pre-established DFs (Section A in SP) and type/level of damage with no pre-established DF on the chart for the level of damage (section B in SP)

Corn with kernel damage (25%) and test weight (39 pounds) is designated as U.S. Sample Grade. Since the test weight has no pre-established DF, the pre-established DF for kernel damage and the DF for Sample Grade will not be used. The LMP for corn is $2.20/bu. The corn was sold to a disinterested third party (as verified by the AIP) prior to 60 days after the calendar date for the EOIP. The QAF is determined as follows:

(a) $.65 (RIV for 39 lbs. test weight)
+ $.75 (RIV for 25% kernel damage)
$1.40 Total RIV

(b) $1.40 (Total RIV) ÷ $ 2.20 (LMP) = .636 (DF)

(c) 1.000 - .636 = .364 QAF

G. Crops Without Quality Adjustment Charts in the SP

For some crops, there are no QA charts in the SP, and the CP provide that the actual dollar-and-cents value of the damaged crop is used in establishing the QAF (value of the damaged production divided by the LMP as defined in the specific CP) or as otherwise specified in the CP; e.g., price election. Check the applicable CP for applicable crops. This does not apply to barley, corn, canola, flax, grain sorghum, oats, rye, safflowers, soybeans, sunflowers, and wheat; refer to subparagraph E above for these crops. Quality provisions in specific crop options or endorsements may differ from the following procedures. Therefore, refer to the individual crop endorsement or option for specific QA provisions.

(1) The dollar-and-cent value of the damaged production is the local market value for the same quality as the damaged production. Refer to allowances for conditioning costs in (5) below. When determining the value of production, consideration must be given to the test weight, damaged kernels, moisture content, substances or conditions injurious to human or animal health, and other factors which (due to insurable causes) affected the value of the production. In regard to moisture, refer to subparagraph I(4) below.

(2) The dollar-and-cents value shall not reflect any reduction due to uninsured causes.

(3) For unsold Production (Commercially Stored, Stored on Farm, or Appraised Mature Production), the actual value of damaged production is the value of the damaged production obtained in the local market area on the date of final inspection. Local market is the area in which the insured normally markets the crop, to the extent possible. If the production has ZMV, refer to subparagraph H for additional information.

G. Crops Without Quality Adjustment Charts in the SP (continued)

(4) If the insured sells damaged production at a market outside the local market area, (distant market) transportation costs to the distant market in excess of the costs to transport the production to the local market may be deducted from the price at the distant market. The resulting price cannot be less than the price that would be received in the local market area. Transportation costs to be used in this determination must be usual, reasonable, and customary.

(5) The value used for fed production will be the value at the local market on the date of final inspection provided the:

(a) Adjuster can obtain a representative sample of the grain being fed and from which the adjuster can obtain the test weight or a sample is submitted to a licensed grader to determine the grade and any allowable quality defects, or

(b) Insured can provide weight tickets and/or grading slips from an elevator who has a licensed grader who has obtained samples from each load of production to be fed.

Note: If production to be fed has ZMV, refer to subparagraph J below for additional information. Samples submitted by the insured cannot be used to determine test weight or grade. Only the adjuster or a licensed grader can extract samples for quality adjustment purposes.

(6) The actual value (per unit of measure) of the damaged production, that is sold or otherwise disposed of, is the dollar amount received or the local market value, by load on the date of disposition; whichever is higher taking into consideration the other procedures in subparagraph I. This value must be determined for each load.

(a) The adjuster must verify the value received from the settlement sheet. If the final settlement has not been made, the adjuster must verify with the commodity buyer what value will be paid for the damaged production. Do not use load tickets.

(b) When grain qualifies for quality adjustment and the grain dealer has applied additional dockage to dock high moisture grain:

(i) In addition to normal shrinkage for excess moisture, grain buyers sometimes further reduce production for high moisture grain. When the production shown on warehouse or elevator tickets has been reduced by applying such additional reductions, the gross units of wet production must be determined before the production can be adjusted for quality.

(ii) If the grain buyer reduces the pounds or bushels rather than reducing the value of the damaged production, the price per bushel or pound must be adjusted to reflect the price of the delivered production without consideration of high moisture. In such situations, do the following:

G. Crops Without Quality Adjustment Charts in the SP (continued)

(A) Adjust the gross production for moisture in accordance with the CP.

(B) Document the calculation for the corrected moisture deduction in the Narrative of the PW.

(C) Divide the total value received from the buyer by the number of bushels determined (A) above. The result will be the value per bushel or pounds for the damaged crop. This value will not be further adjusted unless there are uninsured causes of loss.

(D) The value per bushel or pounds determined in (C) above divided by the appropriate local market price gives the applicable QAF that will be used to calculate the PTC.

(E) The LASH will provide additional information and specific PW entry instructions.

(7) Contracted production as used in the context of this procedure refers to speculative-type contracts, not processor contracts.

(a) Contracted production has been delivered/sold (contract has been fulfilled). The actual dollar and cents value is the price received for the damaged production provided the discounts used to establish the price received are usual, reasonable, and customary.

(b) Contracted production has not been delivered/sold (contract has not been fulfilled). Since settlement has not been made, there is no way to establish the value of the damaged production with any certainty; therefore, the production will be considered to be unsold. Establish the value as instructed in G(3) above.

(c) In some cases, contracts will be set up with minimum prices (minimum price contract), which can be adjusted to a higher price after delivery of the damaged production and receipt of the minimum price. In these cases, if the contract has been fulfilled by the date of final inspection, the price the insured has received by this date is the value used (either the minimum price adjusted for quality or the minimum price adjusted for quality plus any additional value received after delivery).

(d) Disregard the fact that the insured may receive additional money after the claim has been finalized. The only value that can be considered is the actual value the insured has received by the date of final inspection. Refer to examples below.

G. Crops Without Quality Adjustment Charts in the SP (continued)

Example 1: At the time of loss adjustment, the insured had fulfilled the contract (delivered all contracted grain) and had received the minimum price (less discounts for the damage) $4.00 per bushel. The value used to determine the QAF is $4.00.

Example 2: Prior to loss adjustment, the insured fulfilled the contract and received the minimum value (less discounts due to the damaged grain) of $4.00. However, by the time loss adjustment was done, the insured had received an additional 25 cents/bu., due to the adjusted minimum price. In this case, the value received is $4.25 not $4.00. Thus, the $4.25 is used to determine the QAF.

Example 3: At the time of final inspection, the insured has signed a contract with the elevator giving the elevator title to the grain in exchange for a delayed settlement. Until the insured triggers the date that settlement is to be made, no price has been agreed upon nor no money received by the insured. In such cases, the production is considered unsold stored production and adjustment will be made based on the value of the damaged production that is quoted in the local market area on the date of final inspection.

(8) The affected price (value) of the damaged crop may reflect other insurable factors besides the factor(s) that qualified the crop for QA. When the price does reflect other factors, make sure double credit is not given for such factors; e.g., price reduced due to moisture.

(9) No drying charges are allowed in establishing the value of the damaged crop.

(10) Adjustments for excess moisture adjustments must be made separate from and prior to QA and can only be made if allowed for in the CP or SP.

(11) If conditioning charges are incurred to obtain a higher value for the production, reduce the price of the production after it has been conditioned by the cost of conditioning to obtain its value (unless otherwise specified in the CP or SP); but the established value is not to be lower than the value of the production before conditioning. This adjusted value will be considered the value of the damaged production for quality adjustment purposes.

Note: Drying charges for reducing the moisture content of the production are not considered conditioning charges.

H. ZMV Production

These procedures apply to: (a) crops that have quality provisions in the CP unless specified otherwise in the SP; (b) crops that have CP that direct the quality provisions will be contained in the SP; or (c) the required or recommended destruction of crops or crop production described in paragraph 1108. This procedure does not apply to production that cannot be mechanically harvested as described in subparagraph 921D.

(1) Every reasonable effort should be made by the insured and AIP to find a market for the production before it is declared ZMV. It is essential that AIPs communicate with the RMA RO to ensure AIPs are aware of available markets for damaged production.

Examples of information regarding the damaged production the AIPs may be asked to facilitate the RO's search for potential markets: the type, class, variety, and practice, if applicable, the geographical area, including the approximate number of insureds affected, where the crop is produced or located, the approximate amount of production in the applicable unit of measure, the physical condition or quality determinations, if applicable, and an overview of the efforts made by the insured and AIP to locate a market for the production.

(2) There should be very few instances, if any, where a market and value cannot be found for production with types/levels of damage or grade for which there are pre-established DFs in section A of the SP. The following items are to be followed when trying to find a market for the damaged production.

(a) Determine if there are buyers outside of the insured's local marketing area (within a reasonable distance) willing to buy the damaged production. Transportation costs (in excess of transportation costs to the insured's local market area) that would be incurred as a result of transporting production outside the insured's local marketing area will be considered for crops:

(i) Using actual value received to determine the value of the damaged production;

H. ZMV Production (continued)

(ii) With quality adjustment provisions in the SP and that have a type or level of damage for which there are no pre-established DFs. Refer to subparagraph E above (or the SP for the specific crop); or

(iii) With quality provisions in the SP and for which there is a pre-established DF for the type and level of damage, to determine whether there is a ZMV; i.e., value minus transportation cost (in excess of cost to local market) equals zero or negative value. If after the consideration of the transportation cost there is a positive value, the production must be adjusted in accordance with the pre-established DFs. The DF will not be adjusted for the transportation cost.

(b) Determine if livestock feeding operations or other types of buyers are willing to buy the damaged production.

(c) Determine if the damaged production can be conditioned and sold.

(i) Conditioning costs will be considered in determining the value of the damaged production; or as applicable, for some crops, the RIV of the damaged production.

(ii) Conditioning costs are not allowed if there are pre-established DFs shown on the charts in the SP for the types and levels of damage(s).

(d) If a market still cannot be found for the damaged production after the determinations in (1)(a)-(c) above have been made, the AIPs shall delay finalization of a claim if there is a reasonable probability that there will be a market for the damaged production within the next few weeks, but not later than 60 days after the calendar date for the EOIP. This may happen if the markets have bought enough higher quality grain to enable them to buy the lower quality production to blend with the higher quality production.

(e) For crops having QA provisions in the SP, if the AIP has determined the production to be ZMV because there are no buyers in the insured's local market area and any distant market (with fair consideration of transportation and conditioning), and the insured opts to not destroy the production:

(i) For types and levels of damage that fall under section A of the SP, production will be quality adjusted based on the DFs in section A.

(ii) For types and levels of damage that fall under section B of the SP that remains unsold 60 days after the calendar date for the EOIP, claims will be settled based on .500 as outlined in subparagraph E(10).

(iii) For types and levels of damage that fall under section C of the SP, refer to paragraph 1109.

H. ZMV Production (continued)

(f) Document all determinations made in (1)(a) - (e) above, including names and locations of marketing outlets, values (RIVs if applicable for the crop) quoted for the damaged production, any information pertinent to possible conditioning of the damaged production, any allowable fair consideration for transportation costs of the damaged production, etc. Use the highest obtainable value (after allowable adjustments for conditioning or fair consideration of transportation costs, if applicable) or if RIVs are applicable for the crop, use the lowest RIV.

(3) If production is eligible for QA under section C3 of the SP, the AIP does not need to determine whether the production has ZMV before:

(a) Authorizing the insured to destroy the production,
(b) Verifying destruction was done in a manner acceptable to the AIP, and
(c) Settling the claim based on zero PTC.

(4) When the AIP has determined the production to be ZMV or any Federal or State agency requires destruction, as stated in section 15(j) of the BP and the insured destroys the production, the following must occur before the claim can be quality adjusted to zero PTC:

(a) Prior to the insured destroying the production, the adjuster must communicate the acceptable methods of destruction as stated in (5) below and the insured must agree, in writing, upon an acceptable method of destruction that would meet the definition in (5) below.

(b) The adjuster must either witness the destruction and document the destruction method (refer to (5) below) of the production during an on-the-farm inspection or leave a Certification Form as described in (6) below, and follow-up with an on-the-farm inspection to verify destruction and whether the destruction method was an acceptable method as described in (5) below.

(5) The following includes exceptions to requirements for destruction; however, there is no exception to destruction when production is infected by a type and level of mycotoxin (or other substances or conditions injurious to human or animal health) for which state and/or federal regulations or guidelines require destruction of the infected production.

Exception 1: (1) For mature UH production that in itself is destroyed (i.e., the UH production is of such poor quality that it could never be used for feed or in another manner which would provide any type of value to the insured) or if there is no crop production on the stems/stalks, only vegetation from the stems/stalks of the plant on which the crop was growing remains.

H. ZMV Production (continued)

(2) The requirement to destroy the crop prior to indemnification can be waived by having the insured (or insured's representative) sign a Certification Form containing a statement indicating that the crop will not be harvested and will be destroyed.

(3) AIPs must take pictures of the crop demonstrating that the production is in itself destroyed (e.g., only plant vegetation from which the crop was growing or should have grown remains) along with any other documentation, and this documentation must be referenced in the Narrative of the PW or on a Special Report attached to the PW. This documentation must be retained in the insured loss file folder.

(4) When there is no crop production, only plant vegetation, the vegetation does not have to be destroyed. Insureds may hay, bale, or graze the vegetation.

Exception 2: When the criteria in paragraph 1241 are met, immature and mature UH production are exempt from the destruction requirement when destruction of the crop acreage would cause wind erosion problems. AIPs must include such documentation as described in paragraph 1241 in the insured's loss file folder and note this in the Narrative of the PW or on a Special Report attached to the claim.

Exception 3: Production can be gleaned by an approved charitable organization rather than destroyed, provided all the criteria stated in paragraph 904 are met. AIPs must place such documentation as described in paragraph 904 in the insured's loss file folder and note this in the Narrative of the PW or on a Special Report attached to the claim.

(6) An acceptable destruction method is a method that will result in the production having no possibility of being marketed or possibility of salvage use that could result in any type of compensation to the insured. Grazing and haying (even for the insured's own use) is still considered a salvage use because it results in compensation (value) to the insured; therefore, it is not an acceptable destruction method except as stated in (3)(b) above. Destruction of such production should be done in accordance with any applicable method prescribed by State or Federal regulations.

(7) When the adjuster will not witness destruction, a Certification Form must be used to record the insured's certification that the production has been destroyed.

(a) In lieu of or in addition to the instructions for completing a Certification Form, refer to the required completion instructions in exhibit 7.

H. ZMV Production (continued)

(b) Before leaving the Certification Form, the adjuster and insured must agree on an acceptable method of destruction as described in (3).

(c) The adjuster must instruct the insured to enter the date the production was destroyed and document the destruction method in the "Remarks" section of the Certification Form.

(d) The adjuster must advise the insured that when the AIP receives the Certification Form back from the insured, the claim cannot be finalized until the adjuster makes another on-the-farm inspection to verify destruction and the destruction method of the ZMV production, unless one of the exceptions in (4) above apply.

(e) The adjuster must document on the PW or on a Special Report, the following:

(i) Date and method of destruction and whether the method is acceptable;
(ii) Date of verification and on-farm inspection; and
(iii) Any other pertinent information.

I. Waiving Quality Adjustment

(1) There may be times when the insured wants to waive the quality adjustment portion of the claim on a loss unit (The waiver is applicable only to loss units; refer to (2)(c) below.) because of an expected delay in the determination of values or RIVs for the damaged production. Except for the situation stated in (2) below, AIPs may allow an insured to choose to waive the quality portion of the claim for indemnity on a loss unit to facilitate earlier payment of indemnities, provided:

(a) The AIP obtains a signed waiver from insureds who choose to waive quality;

(b) All loss units of the crop are waived for an eligible crop insurance contract; i.e., crop/state/county. The insured won't have the choice of waiving quality by unit;

(c) Insureds who waive quality on a crop, shall not be allowed to reconsider at a later date and request his/her claim be re-opened and adjusted for quality. The PTC on the claim will be used for the APH report for that unit; and

(d) The documentation of the election to waive quality must be completed and made a part of the loss file. A statement regarding the waiving of QA should be entered on each PW or on a Special Report for each loss unit and this statement signed by the insured in addition to the insured's regular signature on the PW.

I. Waiving Quality Adjustment (continued)

(2) A Quality Waiver Will Not Apply:

(a) For Crops that contain quality provisions in the SP that are determined to contain Aflatoxin exceeding 300 ppb, Fumonisin exceeding 100 ppm, Vomitoxin in excess of 10 ppm, or contains substances or conditions that are injurious to human or animal health because the SP require that the claim will not be completed until such crop production is sold, fed, used in any manner, or destroyed.

(b) If any Federal or State agency requires destruction of the crop or crop production, as applicable, because it contains levels of a substance, or has a condition that is injurious to human or animal health in excess of the maximum amounts allowed by the FDA or an agency of the applicable State in accordance with section 15(j) of the BP.

(c) PTC for APH purposes on Non-Loss units will be determined in accordance with procedures in the CIH.

1103 Adjustments for Moisture

(1) Mature production will be reduced when it meets the requirement stated in the CP/endorsement. Apply moisture adjustment, as specified in the LASH, prior to any QA.

(2) Refer to the specific CP and LASH for applicable hybrid seed programs that provide adjustments for excess and deficient moisture percentages.

(3) Moisture adjustment charts are contained in each applicable LASH. Use these charts only when computing net production.

(4) Moisture percentages are established from the individual load slips or settlement sheets. The gross production of wet production and the actual moisture percentage must be determined before the crop can be considered for a moisture adjustment. Methods used by Grain buyers to discount high moisture grain include, but are not limited to the following:

(a) Reduction of price in relation to the amount of moisture on the basis of currently established standards (charts).

(b) Applying additional dockage relative to the amount of moisture.

(c) Applying additional discounts relative to the amount of moisture percentage. Refer to subparagraph 1102G(6)(b).

(5) Moisture tests can be performed by:

(a) Grain handlers at commercial facilities that buy or store grain;

(b) FGIS Field Offices, FGIS-designated, or FGIS-delegated entities;
(c) Insureds to adjust their contemporaneous load records for excess moisture; or
(d) Adjusters; provided the adjuster has a properly maintained, functioning, and calibrated moisture tester.

(6) The adjuster is responsible for ensuring that any sample used to make a moisture determination is representative of the production in the entire storage structure. This is done by using a grain probe (may need an extension on the probe) to take samples from various depths and areas of the bin or other various means to derive a moisture percentage that is representative of the entire storage structure.

(7) Only the adjuster can take samples of farm-stored or mature UH production for moisture determinations, unless accepted as stated in paragraph 1002 or 1003.

(8) For consolidating and averaging moisture percentages on the PW, refer to paragraphs 1105 and 1106.

(9) Entries for moisture factors (and/or moisture percentages) on the PW are made as instructed in the applicable LASH.

1104 Adjustments for Foreign Material & Dockage

A. General Information

(1) The term "FM" or "dockage" is sometimes used by buyers differently than the FGIS definition. The adjuster must determine that the buyer's determination of FM and/or dockage is made in accordance with the FGIS definitions in the grading standards, or of the applicable State or other entity.

(2) When the term(s) for "FM" or "dockage" used by the buyer is not consistent with the FGIS definitions (or definitions in the grading standards of a State or other entity specified in the CP for the respective crop), the adjuster must work with the buyer to determine the percentage of FM and/or dockage deducted by the buyer that is consistent with FGIS' (or of the applicable State or other entity) definition for FM and dockage for the insured crop; otherwise, FM and/or dockage will not be allowed.

(3) For the purposes of determining PTC for the crops listed in exhibit 13, adjustments of gross production due to FM and/or dockage will be allowed unless it is due to uninsured COL. Adjustments for FM and/or dockage will not be made if the insured is not discounted for FM and/or dockage. There may be other items such as stones, conspicuous admixture, or admixture for which gross production may be adjusted.

(4) The actual percentage of FM and/or dockage will be deducted regardless of grade. Enter the percent of FM and/or dockage in the column 58a on the PW. Enter the FM factor as determined in subparagraph 1104E in column 58b on the PW.

A. General Information (continued)

(5) The CPs specify whether to use FGIS grading standards, or the State or other entity grading standards when determining FM and dockage. Adjustments for material found in production are only allowed if it meets the definitions for FM and/or dockage (shown in exhibit 13) as defined by FGIS or the applicable grading standards of the State or other entity for the insured crop.

(6) Because the definitions of FM and dockage are subject to change by FGIS, the AIP should verify the definitions in exhibit 13 are current by checking the FGIS website or via a link on the RMA website where the LASHs are located.

(7) The FM and/or dockage determinations made by the buyer may be accepted for claims purposes if the adjuster verifies the amount of dockage is normal for the crop, crop year, and the area. The adjuster will not be required to document the COL for normal dockage.

(8) If the amount of FM and/or dockage is in excess of normal for the crop, crop year, and the area; the adjuster must verify whether or not the cause of damage for the FM and/or dockage is insurable. Document such cause in the Narrative of the PW or on a Special Report. If the cause of damage is insurable, the FM and/or dockage determinations made by the buyer may be accepted for claims purposes.

B. Commercially Stored or Sold Production

(1) When a FM and/or dockage percentage(s) is shown on producers' records (i.e., warehouse receipts, summaries, settlement sheets, individual load slips), enter in the FM column of the PW the FM factor as determined in subparagraph 1104E that the buyer or storage facility has actually deducted from the gross production. Refer to paragraphs 1105 and 1106 for consolidating or averaging FM and/or dockage percentage entries on the PW.

(2) When FM and /or dockage is shown as a price discount and not as a percentage, contact the elevator either by phone or visit and determine the percentage that was actually deducted. Make no entry in the FM column of the PW if this percentage cannot be determined.

(3) Do not include any adjustments for moisture in the FM% entry on the PW.

C. Farm Stored Production

(1) FM and/or dockage as defined by FGIS (exhibit 13) can be determined by the adjuster if the adjuster has the proper equipment and follows FGIS instructions (refer to D below) and the adjuster and the insured agree there are no quality deficiencies other than test weight.

C. Farm Stored Production (continued)

(2) When the adjuster performs FM or dockage tests for crops using FGIS grading or inspection standards, the grain must be measured and weighed as described in subparagraph D below or from the FGIS publication "Practical Procedures for Grain Handlers." This publication can be downloaded and printed from the FGIS website or via a link from the RMA website, located in the same location as the LASHs. If the crop is not included in this handbook, contact FGIS to determine where this information can be obtained. For crops for which the CP require grading standards of a State or other entity, obtain instructions from the applicable State or entity. If the State or other entity will not provide such instructions, samples must be transported or mailed to a facility designated by the State or other entity.

(3) The adjuster may take samples to a local elevator to obtain the percentage of FM and/or dockage provided the insured agrees that there are no quality deficiencies other than test weight.

(4) If the adjuster and the insured are unsure if the production qualifies for QA, the adjuster must obtain a sample of the farm-stored production and transport or mail it to an FGIS office (AMS, if applicable, or if the CP for the respective crop require grading standards of a State or other entity, the applicable sites specified by the State or other entity) for these determinations. Refer to paragraph 1102.

D. Determining Dockage & FM on the Farm - Wheat & Barley Only

For a large portion of the crops, screen sizes and procedures can be obtained from the FGIS publication "Practical Procedures for Grain Handlers." This publication can be downloaded and printed from the FGIS website or via a link from the RMA website, located in the same location as the LASHs. If the crop is not listed in this publication, contact FGIS to obtain this information or submit the adjuster-obtained samples to FGIS. For crops for which CP require grading standards for a State or other entity, obtain the instructions from the applicable State or entity. If the State or other entity will not provide such instructions, the samples must be transported or mailed to a facility designated by the State to grade.

(1) Use the following materials when determining dockage and FM on the farm:

(a) Screen "A" - 12/64" round aperture (for wheat).
(b) Screen "B" - 8/64" triangular aperture (for wheat).
(c) Screen "C" – 5/64" or 4.5/64" round aperture (for wheat).
(d) Screen "D" – 5/64" triangular aperture (for barley).
(e) Pan - round non-perforated (610-E).
(f) Funnel.
(g) Leveling stick.
(h) One-pint or one-quart grain measuring bucket.
(i) One-pint or one-quart grain measuring scale (each scale must be calibrated to the respective bucket).

D. Determining Dockage & FM on the Farm - Wheat & Barley Only (continued)

(2) Instructions for determining weight and FM:

(a) Measure and weigh grain as outlined in subparagraph 1107A and B, except the samples will not be "clean" (free of FM and/or dockage as defined by FGIS).

Determine the weight of one pint or one quart of grain by use of the "lbs. & ozs." Line on the scale. (One pint = one pound.)

(b) Refer to (1) above: screens "B" and "C" are both wheat screens. Use screen "B" in the presence of buckwheat infestation. Use screen "C" under normal conditions.

(c) For wheat, place screen "B" or "C," whichever is needed, in the non-perforated pan, insert screen "A" next and spread weighed grain over screen "A." Use a circular shaking motion to cause all dockage to pass through the screens into the pan. For barley, follow all the same instructions, except only screen "D" is used. (Refer to (1) above for screens A, B, C, and D.)

(d) The screenings in the pan along with anything remaining in the top screen is dockage.

(e) From the dockage-free sample, remove all the matter other than wheat that remains in the sample by hand picking. The matter that is handpicked is FM.

Establish the amount of FM by weighing the handpicked matter with the bucket and scale. Use the "% of lbs." line on the scale to make the final determination of the FM percentage.

E. Determining Foreign Material Percentage Factor - All Applicable Crops

The FM% factor is one minus the sum of the percent of dockage and the full-sample FM equivalent percent. The full-sample FM equivalent percent is needed to convert the percent of FM to the equivalent percent that it would be if determined based on the entire sample as a whole, before the removal of dockage (FGIS grading procedures require the percent of FM be determined after the removal of dockage, and is based on the dockage-free sample weight). It is computed by multiplying the percent of FM by one minus the percent of dockage.

Example: The grade certificate shows dockage of 3.0% and FM of 2.0%. The FM factor is: $1 - [0.03 + (0.020 \times (1 - 0.03))] = 0.951$.

F. Unhusked Cribbed Corn

Unhusked cribbed ear corn on which none of the husks have been removed is unusual, but when it occurs, determine the husk factor and apply this factor to the calculated gross bushels to determine the production to be entered in column 55 of the PW. Determine the husk factor as follows:

(1) Fill a straight-sided container (wooden box 24" X 24" X 12") with a representative sample packed to the same density as the crib.

(2) Remove husks. Put husked ears in the box. Pack and measure depth.

(3) Divide the depth of the husked corn by the depth of the unhusked sample. Round to two decimal places. Multiply this factor by the calculated gross bushels and enter the result in column 55 of the PW. Retain a copy of all calculations in the insured's contract folder.

1105 Consolidating Same Moisture, Foreign Material, or Dockage Percentage Entries

(1) Adjusters may consolidate loads containing the same moisture or FM or dockage percentages (if allowed by subparagraph 1104A) on a single line of the PW (as listed below) unless separate lines are required for reasons other than FM or dockage or moisture differences. This applies to the crops listed in subparagraph 1102A(2)(a)(iv), except:

(a) For dry peas, FM and dockage are applicable; however, a moisture percentage is not applicable. Refer to paragraph 1104 and the Pea LASH for FM entries.

(b) For rice, only moisture is applicable; (FM and dockage are not applicable).

(c) Moisture adjustment is not allowed for flax in accordance with the Small Grains CP.

(2) When QA applies, list quality adjusted production on separate lines.

(3) When there are two or more individual settlements sheets or summaries, list each on a separate line.

(4) To consolidate percentages, total the production of the loads with the same percentages, and make a single entry for such loads.

1106 Averaging Moisture or Foreign Material Percentage Entries

(1) Moisture adjustment applies to the crops listed in subparagraph 1102A(2)(a)(iv), except as stated in subparagraph 1105(1)(a), (b), or (c) above.

(2) When the elevator has averaged the FM and/or dockage (if allowed by subparagraph 1104A) or moisture percentages on the settlement sheet or summary sheet, adjusters may average moisture or FM and/or dockage (as stated in subparagraph 1104A) percentage entries on a single line of the PW (as listed below) unless separate lines are required for reasons other than moisture, FM and/or dockage (if allowed as stated above) differences.

(3) Averaged Moisture percentages are entered on one line on the PW except when:

(a) QA applies. List quality adjusted production on separate lines.

(b) Elevator settlements sheets or summary sheets are based on consolidated or averaged FM and/or dockage and there are two or more individual settlement sheets or summary sheets, list each on a separate line.

(4) To enter averaged percentages, use the same average provided on the elevator settlement sheet or summary sheet, after verifying its acceptability. Use of averaged percentages is authorized only when the elevator has calculated and settled on the basis of an average on the settlement sheet or summary sheet and the determined average is acceptable to the adjuster. Exercise caution in determining the acceptability of averages because of the potential for significant impact on indemnities (e.g., one 20,000# load @ 15% moisture and one 4000# load @ 25% moisture (Simple avg. = 20%; Weighted avg. = 16.7%)). In this case, use of the simple average is not acceptable.

1107 Test Weight & Test Weight Factor

A. Test Weight for Mature Production

(1) The TW for sold production may be taken from settlement sheets or load slips. If quality is involved, the TW from settlement sheets or load slips can only be used if the TW has been determined by a licensed grader.

(2) For farm-stored crops having a unit of measurement other than pounds, the TW and TWF must be used to determine the number of bushels on the basis of gross weight. For those crops using pounds as a unit of measurement, the TW is used to determine the number of pounds. Farm-stored crops that use pounds as their unit of measurement include: canola/rapeseed, dry beans, dry peas, mustard seed, popcorn, rice, safflowers, and sunflowers.

(3) For grain storage structures, the TW must be taken before dockage and FM are removed. FM and/or dockage (if allowed by paragraph 1104) will be accounted for in the column specified for FM% on the PW.

A. Test Weight for Mature Production (continued)

(4) If samples of farm-stored production of barley, canola, flax, rye, non-oil type (confectionary) sunflowers, and wheat are going to be submitted to FGIS, a TW must be taken during the farm inspection, unless a special request is made to FGIS for a TW prior to removal of dockage or FM. TW is not a grading factor under the U.S. Grading Standards for canola or as a factor for QA. FGIS determines the TW for the crops listed in this subparagraph from a dockage-free sample (FM-free for oil-type sunflowers). The TW entered on the PW, as instructed above, is the TW prior to removal of dockage or FM.

(5) If TW is measured in tenths of a pound, record weight to tenths in Section II of the PW, unless the AIP specified otherwise.

(6) For QA, in addition to the TW determination in (2) above, a TW determination for barley, flax, rye, non-oil type (confectionary) sunflowers, and wheat must also be determined from a dockage-free sample. For oil-type sunflowers, TW must be determined from an FM-free sample.

(a) Enter the TW determined for QA purposes in the Narrative section of the PW. The TW determined for QA purposes may differ from the TW entered in the TW column on the PW since the TW determinations specified in (2) above must be made before the removal of FM and dockage.

(b) TW determinations for QA must be performed by the adjuster or by a grader licensed under the authority specified in the CP in accordance with the applicable FGIS official standards.

(7) For ear corn, a representative sample must be shelled to make the TW determination (refer to Corn LASH for specific instructions).

(8) To determine the TW and TWF for corn silage and sorghum silage, refer to the specific instructions in the Corn LASH for corn silage or the Silage Sorghum LASH, as applicable.

B. Determining Test Weight

(1) Mix and pour samples of the stored grain into the test bucket from a height of approximately four inches (a normal hand width) above the bucket to simulate natural fall.

(2) Fill the test bucket to overflowing and level with prescribed leveling stick. Unless the test-bucket manufacturer's instructions specify otherwise, level by using three zigzag motions across the rim of the grain bucket with the leveling stick held at a 90-degree angle to the top of the bucket (do not use scale bar to level the grain in the bucket and do not pack); and

B. Determining Test Weight (continued)

(3) Weigh the leveled bucket of grain using a calibrated scale. Determine the weight by using the "pound per bushel" line from the scale (to tenth of a pound if the test weight bucket shows pounds to tenth).

C. Determining Test Weight Factor

(1) Divide the determined actual TW by standard TW for the crop and round the result to three decimal places. Refer to exhibit 23 for a list of standard weights by crop.

(2) Do not use a TWF for the following pound crops: Canola/rapeseed, dry beans, dry peas, mustard seed, popcorn, rice, safflowers, or sunflowers; use actual TW entered on the PW.

(3) For unweighed farm-stored barley, corn, grain sorghum, hybrid seed crops, oats, popcorn, soybeans, and wheat that is:

(a) Shelled or threshed whole grain, use the combination TW pack factor as specified in subparagraph 1005B and the applicable crop LASHs.

(b) Ear corn, use the TWF (refer to (1) above) instead of the combination test-weight pack factor as specified in subparagraph 1005B and the applicable crop LASH.

(4) A pre-harvest appraisal is required to establish the production for corn insured as grain that will be harvested and ground for corn and cob meal (ground ear corn) or chopped for earlage. Refer to paragraph 921.

1108 Flooded Crops

A. Federal or State Agency Recommendations

When a Federal or State agency recommends destruction or disposal of production from qualified acreage, the AIP may apply a zero appraisal to any qualified UH acreage of an insured crop, based on the production of the crop having ZMV for crop insurance purposes. Production from qualified acreage is where the edible portion of the crop has been exposed to flood waters and it:

(1) is considered adulterated;
(2) can be injurious to human or animal health; and
(3) should not be used for feed or food.

A. Federal or State Agency Recommendations (continued)

Prior to applying zero appraisals based on ZMV determinations, AIPs must perform an on-the-farm inspection to determine the amount of qualified UH acreage identified in above. Qualified UH acreage will:

(1) be assessed a zero appraisal;
(2) not require the loss adjuster to make any field level appraisals beyond determining qualified UH acreage;
(3) not require the production to be sampled and tested by an approved laboratory; and
(4) be considered zero PTC based on ZMV, if destroyed in accordance with subparagraph 1102H(4).

B. Federal or State Agency Requirements

When a Federal or State agency requires destruction of any insured crop or crop production, as applicable, because it contains levels of a substance, or has a condition, that is injurious to human or animal health in excess of the maximum amounts allowed by the Food and Drug Administration, other public health organizations of the United States or an agency of the applicable State, the insured must destroy the insured crop or crop production and certify that such insured crop or crop production has been destroyed prior to receiving an indemnity payment. Failure to destroy such acreage will result in an appraisal for uninsured causes of not less than the production guarantee and penalties as stated in 15(j) of the BP.

1109 Quality Adjustment when Production Contains Mycotoxins, Other Substances, or Conditions at Levels Injurious to Human or Animal Health

A. General Mycotoxin Information

(1) AIPs must inform insured not to commingle units in accordance with subparagraph 1003B(1), if mycotoxins other than Vomitoxin are suspected.

(2) Due to improved testing procedures, availability of test kits, animal and human health concerns, and general awareness of grain quality, the presence of mycotoxins in grain is becoming an ever-increasing factor in its sale.

(3) Mycotoxins are the by-products of fungal activity promoted by environmental conditions, which are stressful to the affected host plant. Actual production yields may or may not be adversely affected by the presence of the organism, but harvestability and production quality (hence market value) may be adversely affected. Although over 200 mycotoxins have been identified, Aflatoxin, Fumonisin, and Vomitoxin have specifically caused insured grain to be unmarketable.

A. General Mycotoxin Information (continued)

(4) Mycotoxins at high enough levels in production are considered a substance or condition that can be injurious to human or animal health. FDA has identified specific mycotoxins (such as Aflatoxin, Vomitoxin, and Fumonisin) at the levels at which they are injurious to animal and human health. Of all the substances/conditions identified as injurious to human or animal health, Aflatoxin and Vomitoxin have been the most common ones affecting quality adjustment of insured grain.

B. Level of Substance/Condition May Qualify the Production for Quality Adjustment

If the level of the substance or condition in the production is at a high enough level to qualify the production for QA (refer to the applicable SP, CP or quality endorsement), the PTC will be adjusted for quality in accordance with the applicable CP or SP, provided all of the following criteria are met:

(1) For production that will be stored on the farm or in commercial storage, the appropriate samples must be obtained by the adjuster (or a trained disinterested third party approved by the AIP) prior to the production entering storage (other than the exception in (2) below) because mycotoxins have the potential to increase in stored production. Other substances or conditions may also have the potential to increase in storage. If appropriate samples are not obtained prior to storage, such production will not be adjusted for quality due to a substance or condition injurious to human or animal health (refer to exception in (2) below). Therefore, it is important that AIPs inform agents and insureds of the need to notify the AIP anytime that the insured suspects that a mycotoxin or other substances or conditions could be present in the production so the AIP can inspect the crop prior to storage.

(2) Exception for obtaining samples prior to storage: Only for crops which contain Vomitoxin because the potential for Vomitoxin to increase in on-farm or commercially-stored production is very slight. Samples to determine Vomitoxin levels may be obtained after production is stored on the farm. Refer to subparagraph 1109G for sample requirements.

(3) Analysis of the samples pulled by the adjuster (or a trained disinterested third party approved by the AIP) must be performed by an approved laboratory. Refer to subparagraph H below for Criteria for AIP-Approved Testing Facilities (laboratories).

(4) The presence and level of the condition/substance injurious to human/animal health must be due to insured causes. For example: Factors contributing to plant stress and subsequent mycotoxin presence such as insufficient irrigation (under an IRR practice), the use of marginally adapted varieties, non-weather related delayed harvest, inappropriately high plant populations, etc., will result in the determination that the mycotoxin was the result of uninsured causes.

C. Crops that May Be Contaminated With Sewage, Pathogenic Organisms, Pesticides, Chemical Wastes, Heavy Metals, or Other Toxic Substances

(1) AIPs must use State or Federal Agency published guidelines (including testing) to determine if the crop is marketable, including for animal usage. If the crop is determined marketable, the insured will be expected to harvest the crop, unless the costs of conditioning the crop results in ZMV.

(2) If the crop is harvested and conditioned, and testing determines the crop contains levels of contaminants that are in excess of the levels the State or Federal Agency declares as safe for animal usage, such production will be declared zero PTC provided the crop is destroyed in a manner acceptable to the AIP prior to finalizing the claim.

(3) AIPs must document testing results and determinations in the Narrative of the PW or on a Special Report.

D. Coded Cause of Loss for Substance/Condition injurious to Human/Animal Health

When the level of substance/condition qualifies the production for QA, the insured COL is considered due to disease or adverse weather; e.g., mycotoxins are considered due to disease and production covered in flood waters that is contaminated with sewage, pathogens, pesticides, etc., contained in the flood water as described in D above is due to adverse weather; however, the COL recorded on the PW will be "Mycotoxins" or "other condition/substance" (COL code 82) in both cases.

E. Requirements for Samples Required Prior to Storage

Except for Vomitoxin-contaminated crop production, any production contaminated with any other mycotoxin, substance, or condition injurious to human or animal health, must have samples obtained prior to the production going into storage. For farm-stored production that is contaminated with Vomitoxin, subparagraph H below will apply.

(1) When production will be harvested and farm-stored:

(a) AIPs can allow insureds to leave the number of RSAs as stated in subparagraph 924B(1)(a) and the location and size described in subparagraph 924C(1) in their fields from which the adjuster can take representative samples. AIPS can allow insureds to leave additional RSAs in order to obtain the required sample size to send to the approved testing facility; or

(b) The adjuster or a trained disinterested third party approved by the AIP can obtain samples from harvested production before it goes into farm-storage. Samples pulled by anyone other than the adjuster or a trained disinterested third party approved by the AIP cannot be used for QA.

E. Requirements for Samples Required Prior to Storage (continued)

(2) When the insured is not going to harvest, is uncertain of whether to harvest, or has discontinued harvest due to mycotoxin levels (or other condition or substance) levels in the harvested production, the adjuster must obtain samples for mycotoxins (or other condition or substance) from samples taken from RSAs of the standing crop in the field if the standing crop is representative of the acreage. Only the adjuster is authorized to obtain samples from the standing crop.

(3) Adjuster-selected representative samples from UH RSAs of the field:

(a) Select at least the minimum number of representative samples required by the applicable crop LASH for appraisals (e.g., minimum number of samples as specified in the applicable crop LASH) from the minimum number of RSAs specified in paragraph 924. If the minimum number of representative samples does not result in the needed sample size (e.g., 10 pound sample) required by the approved testing facility, select enough additional samples to meet the required sample size.

(b) The representative samples of production from the RSAs of the field are to be used for determining the appraised production as well as the samples needed for the mycotoxin (or other substance or condition) testing and any other quality considerations.

(c) Refer to (4) and (5) below for instructions regarding samples for testing.

(4) Adjusters are to obtain samples for mycotoxin testing (or testing for other substance or conditions injurious to human or animal health) from the selected RSAs of the field(s) or subfield(s) utilizing the Hand Sample Method, or if the insured will agree, the Harvested Sample Method (Refer to G below).

(5) For mycotoxin (or other substance or conditions injurious to human or animal health) testing:

(a) For the crops listed in subparagraph 1102A, one blended sample of all the hand harvested or harvested samples obtained from the appraised RSAs of all fields or subfields for the unit appraised is permitted if the damage appears similar and the insured agrees with using one blended sample. However, since mycotoxin (or other substance or condition) levels can vary from field to field (or subfield to subfield), the insured and AIP can agree to obtain a sample for testing for each field or each subfield (e.g., three fields in a unit (no subfields used) would equal three separate samples for testing for the unit). Also, if the AIP and insured agree to take and submit multiple samples for testing from a field or subfield, then the test results from the multiple samples from the field or subfield must be averaged to represent the mycotoxin (or other substance or condition) level of the entire acreage in the field, subfield, or unit.

E. Requirements for Samples Required Prior to Storage (continued)

(b) Do not blend samples suspected of containing levels of mycotoxins (or other substance or condition) with less than the minimum action or advisory levels from FDA, State, or other Federal agency for the particular mycotoxin (or condition or substance) with samples exceeding the minimum levels. Refer to the table in subparagraph P(7) or Q(5) below.

(6) Refer to subparagraph J for requirements for sample size for testing, maintenance of sample until shipment, and the required timeframe for transporting or shipping the sample to the approved testing facility.

(7) Testing must be done by a testing facility that meets the criteria for an AIP-approved testing facility as outlined in subparagraph H.

Caution: RMA has been advised by grain specialists that adjusters should wear protective clothing, including protective gloves and dust mask when handling mycotoxin infected grains. If a dust mask is not used, adjusters should at least position themselves so they are not downwind of any grain dust coming from the harvesting equipment or from any grain dust that might occur during the collection of the required representative samples.

F. Representative Sampling Methods for Samples Required Prior to Storage

(1) Hand-Harvested Method

(a) If the insured is not willing to harvest the selected RSAs, the adjuster must hand harvest representative samples from the selected RSAs of the production.

(b) After the representative samples have been taken, the sample for testing (refer to required size in subparagraph J(1) below) must be obtained and must be identified by unit number if one blended sample for a unit is used (or field ID and/or subfield ID (if applicable) and unit number if a sample was taken for each field or subfield). The samples must be transported or sent to the approved testing facility within the timeframe specified in subparagraph J(3) and maintained in accordance with subparagraph J(3).

(2) Harvested Method

(a) If the insured will agree, have the insured harvest the selected RSAs of the field(s) or subfield(s) in the adjuster's presence and to the adjuster's satisfaction.

(b) After the RSAs have been harvested, the adjuster may obtain the samples by either of the following methods:

F. Representative Sampling Methods for Samples Required Prior to Storage (continued)

(i) If the adjuster has a hand probe, the adjuster can extract grain from the combine hopper, wagon, or other temporary holding structure used for the harvested production from the RSAs. Obtain the required sample size (refer to subparagraph J(1) below) by using the hand probe and the FGIS sampling patterns as shown in (d) below as a guide to collect samples. Refer to the Grain Inspection Handbook- Book I – Grade Sampling, Chapter 2, Probe Sampling published by GIPSA.

(ii) If the adjuster does not have a hand probe, have the insured unload the combine hopper into a wagon, truck, or other temporary holding structure used for the harvested production from the representative area, and collect the required sample size (refer to subparagraph J(1) below) from the stream of production at the beginning, at the end, and periodically in between as the production is being emptied from the combine.

(c) After the sample(s) have been taken, the sample for testing must be identified by unit number if one blended sample for a unit is taken (or field ID and/or subfield ID (if applicable) and unit number if a sample was taken for each field or subfield). Because of the possible increase in mycotoxins due to high humidity, heat, and moisture content of the grain, the adjuster is to take samples for mycotoxins immediately after harvest. Do not have the insured harvest and leave the grain in a wagon, combine hopper, or other structure, then return the next day to obtain the samples. Samples must be transported or sent to an approved testing facility within the timeframe stated in subparagraph J(3) and maintained in accordance with subparagraph J(3).

(d) The following examples are standard representative sampling pattern guidelines recommended by FGIS, and are to be used as a guide for locations of extraction when extractions are made with a probe. Insert the probe at the points marked, with the tip of the probe angled ten degrees. FGIS indicates that nearly ninety percent (90%) of error associated with Aflatoxin testing can be attributed to how the original sample was extracted.

Example 1:

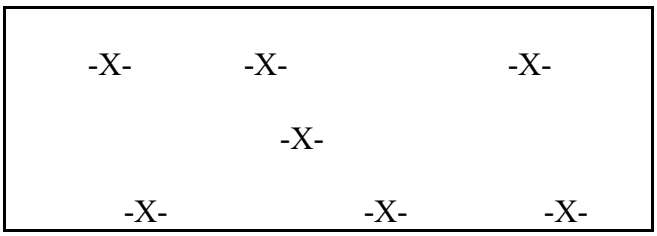

Seven-probe pattern flat-bottom truck or trailer containing grain more than four feet deep.

F. Representative Sampling Methods for Samples Required Prior to Storage (continued)

Example 2:

```
-X-     -X-         -X-     -X-

            -X-

-X-     -X-         -X-     -X-
```

Nine probe pattern for flat-bottom trucks or trailers containing grain less than four feet deep

Example 3: Probing Combine Hoppers. From the top of the combine hopper, insert the probe slightly off-center at a ten-degree angle, and probe the entire depth of the hopper.

G. Sample Requirements for Farm-stored Production Contaminated with Vomitoxin

Samples may be obtained from the storage structure. When samples are obtained from storage, refer to subparagraph J for the required sample size and transportation requirements.

H. Criteria for AIP Approved Testing Facilities

To be an approved testing facility, the testing facility must meet all of the following criteria:

(1) Perform Quantitative Tests;

(a) For mycotoxins: The test results on the production must itemize results in PPM parts-per-million or PPB parts-per-billion of mycotoxin present. The quantitative test kits used to perform the test must be verified by FGIS and must have a test-kit range applicable to the mycotoxin(s). A list containing quantitative test kit types and ranges certified by FGIS can be found in a document entitled "GIPSA Performance Verified Mycotoxin Test Kits" at the following link or successor link: www.ams.usda.gov/sites/default/files/media/FGISApprovedMycotoxinRapidTestKits.pdf.

(b) For other types of substances or conditions: The test results on the production must itemize the results in the same unit of measurement (e.g., ppm or ppb or some other amount) as is stated in the Advisory or Action level (e.g., action levels for Aflatoxin is in ppb) issued by FDA or other public health organizations of the United States or public health agency of the applicable State in which the insured crop is grown.

H. Criteria for AIP Approved Testing Facilities (continued)

(2) Be a recognized commercial, governmental, or university testing laboratory (including approved testing facilities on site at the delivery point of the buyer; i.e., elevators) that uses industry recognized sample sizes, equipment, and procedures for testing the specific type of mycotoxin (or some other condition or substance injurious to human or animal health);

(3) Be a disinterested testing facility. A disinterested testing facility is a facility not involved in buying or selling the production in question. A facility which buys production is not restricted if it does not buy or had no intention of buying the production from the insured for whom it is doing the testing. If a test was made by a facility that was a potential buyer but refused the production because of the mycotoxin (or if applicable other condition or substance injurious to human or animal health), the test performed by the potential buyer is still considered an interested party since they were interested at the time the production was delivered.

I. Sample Size and Transportation of Samples

(1) Sample size to be submitted for testing will be dictated by the approved testing facility. For Aflatoxin, most facilities will likely require at least a ten-pound sample.

(2) Follow the approved testing facilities recommendations for storage and transportation, including required container composition, provisions for maintaining proper temperatures of the sample, any special requirements for high-moisture production, and any other specific information pertaining to handling and transporting the sample to ensure and maintain the integrity of the sample.

(3) Samples submitted for testing by the insured (or insured's authorized representative) cannot be used for quality adjustment. Also, adjusters shall not pull samples and then allow the insured (or insured's authorized representative) to maintain the samples until the adjuster can pick them at a later time to submit to an approved laboratory for testing. Only the adjuster or a person who is a disinterested third party approved by the AIP can maintain and submit the samples for testing. AIPs are responsible for assuring that samples are:

(a) Mailed or transported to the approved testing facility within 4 days of the time the sample(s) were taken or within the timeframe specified by the approved testing facility (if less than 4 days), and

(b) Stored in a breathable container (container composition type specified by the approved testing facility) in a cool, climate controlled place (at the temperatures recommended by the approved testing facility for the particular substance or condition) until shipping.

J. Harvested Production Delivered to Elevator or other Facility

If the insured harvests and delivers production to an elevator, processor, or other facility, any mycotoxin (or other substance or condition) testing done by the elevator, processor, or other facility cannot be accepted for insurance purposes unless the elevator, processor, or other facility has a testing facility that meets the criteria for an approved testing facility for testing mycotoxins (or other conditions or substances that are injurious to human or animal health).

(1) Who Pulls Samples:

(a) If the elevator (or other facility) to which the insured delivers production does not meet the criteria for an approved testing facility (refer to subparagraph H above), the adjuster (using the criteria in (2) below) must obtain the samples for testing prior to the production being transported to the elevator, processor, or other facility; or

(b) If the AIP agrees, the elevator, processor, or other facility can be advised to extract an additional sample per load (samples per load can be blended into one sample per unit) that can be sent to an approved testing facility in order for the damage from the mycotoxin (or other condition or substance) to be considered for quality adjustment purposes. However, before the AIP agrees to use the sample pulled by the elevator, processor, or other facility, the AIP/adjuster must ensure the elevator, processor, or other facility is following the criteria below.

(2) Samples:

(a) For sample size, refer to subparagraph J(1) above.

(b) The sample must be tagged in a way that will identify the insured's name, load number and unit from which the sample was obtained, and any other pertinent information.

(c) The requirements in subparagraphs J(2) and (3) above for maintaining and transporting the sample are applicable.

(d) When the elevator, processor, or other facility is willing to pull the samples and the AIP agrees to use the samples pulled by the elevator for QA:

(i) The AIP can agree to allow the elevator to submit the samples directly to an approved testing facility. When the elevator receives the test results for the insured's samples and notifies the insured, the insured must notify the AIP that the test results have been received.

J. Harvested Production Delivered to Elevator or other Facility (continued)

(ii) If the elevator is not going to submit samples to approved testing facilities, the adjuster or other authorized AIP representative must pick the samples up from the elevator in time to mail or transport the sample to the approved testing facility within 4 days of the time the elevator obtained the sample.

Note: No one other than the adjuster or other authorized AIP representative is allowed to pick the sample up from the elevator and maintain the sample until it can be mailed or transported to the approved testing facility.

(3) If the elevator has a testing facility that meets the criteria for an approved testing facility (refer to subparagraph 1109H(3) for the mycotoxin or other substance or condition), and there is a test result for each load, use the test results of each load to determine the RIV for QA (value of damaged grain for crops that use value of damaged production instead of RIVs for QA purposes).

(4) Loads having the same QAFs can be combined and entered on one line on the PW as stated in the LASHs.

K. Discrepancy Between Test Results

AIPs shall only use test results from approved testing facilities to determine if the production is eligible for QA under section C of the SP. When there is a discrepancy between the test result of a sample from an approved lab used by the AIP and the one used by the disinterested third party buyer or commercial storage facility:

(1) For crops having QA provisions in the SP (not applicable to Malting Barley – refer to applicable MBE):

(a) For sold production for which RIVs are applicable, the test results of the approved lab used by the disinterested third party who bought the production will be used, unless there is substantial reason to believe that the samples taken by the buyer were not done in accordance with approved industry standards for obtaining samples for the particular substance or condition. If the samples taken by the buyer were not done in accordance with approved industry standards, the AIP test result will be used.

(b) For UH production or for farm-stored production containing mycotoxins other than Vomitoxin (e.g., Aflatoxin), the only test results used will be those from samples obtained by the adjuster prior to entering storage and submitted to the approved lab.

K. Discrepancy Between Test Results (continued)

(c) For UH production or for farm-stored production containing Vomitoxin only if there is a discrepancy between the test results of the sample taken on the farm by the adjuster and the test results from a commercial facility where the production has been delivered and sold or stored, the test results from the buyer or commercial storage facility test will be used.

(2) For crops using Actual Value to Determine QA (QA provisions only in the Policy Provisions – does not apply to Malting Barley – refer to the MBE):

(a) For harvested sold production, the test results of the approved lab used by the buyer will be used if the production is sold at the time of final settlement of the claim.

(b) For UH production or farm-stored production, only the test results from samples obtained by the adjuster and sent to the approved lab will be used.

L. Documentation of Mycotoxins or Other Substances or Conditions Injurious to Human or Animal Health

Document in the Narrative of the PW or on a Special Report, the following:

(1) Name of substance/condition (e.g., Aflatoxin) for which the production is being tested, and the level of contamination if the Federal or State agency-issuance states a type/level of substance/condition that would be in excess of the levels considered safe for animal usage. Refer to subparagraph 1109C(3);

(2) Test type - qualitative or quantitative;

(3) Name and location of approved testing facility;

(4) Type of testing facility; and

(5) Test date.

A copy of the test results from the approved testing facility may be attached to the PW in lieu of writing in the Narrative of the PW if items (1)–(5) above are included in the test results. If applicable, a photocopy of the Federal or State destruction order must also be attached to the PW. Note in the Narrative that that the copies are attached to the PW.

M. Potential Markets for Infected Production

Since various mycotoxins affect animal species differently, document by name which potential markets were contacted in establishing a fair grain market price. Take into account use for feed for tolerant animal species, value for blending with other grain (when allowed), and commercial (alcohol fuel plant or other product) uses. Likewise, document and take these same things into account for other substance or conditions that FDA or other State or Federal Health Agency has identified. Take steps to safeguard against any vulnerability involving claims of insureds who are directly involved in the buying or testing of damaged production.

N. Settlement of Claims for Crops Having QA Provisions in Section C of the SP

Not applicable to Malting Barley. Refer to the MBE.

(1) The QAF is 1.000 minus the sum of the applicable DFs, expressed as three-place decimals. The PTC remaining after any reduction due to excessive moisture (in accordance with the applicable CP) is multiplied by the QAF (not less than zero) to determine net PTC.

(2) When no buyers in the insured's local area are willing to purchase the production and after fair consideration to deliver production to a market outside the insured's local marketing area, ZMV (section D of the SP) occurs and the insured:

(a) Destroys the production in a manner acceptable to the AIP, the DF will be 1.000 for such production, resulting in zero PTC. The method of destruction must result in the production having no possibility of being marketed or possibility of any salvage use that could result in any type of compensation to the insured. Refer to subparagraph 1102H(5) for exceptions to the requirement to destroy the ZMV crop.

(b) Does not destroy the production in a manner acceptable to the AIP, makes no attempt to destroy the production, or refuses to destroy the production, such production cannot be quality adjusted for any deficiencies listed in section C of the SP. However, if such production also qualifies for DFs under section A or B2 of the SP, such production will be quality adjusted with only those DFs.

(c) In accordance with the General Statements of the QA Statement(s) in the SP, fair consideration is allowed for sold production that falls under (sections C1a, C2ai, C3ai, and C3bi of the SP) but it is not allowed for production fed or used in a manner other than feed.

(3) QA will be allowed for substances or conditions injurious to human or animal health when levels of substances or conditions are in excess of the lower of the following amount allowed by:

N. Settlement of Claims for Crops Having QA Provisions in Section C of the SP (continued)

(a) FDA's action or advisory level for the crop;
(b) Another public health organization of the United States; or
(c) A public health agency of the applicable State in which the insured crop is grown.

(4) QA for Sold Production containing:

(a) Vomitoxin that has been sold prior to 60 days after the calendar date for the EOIP, the DF will be the RIV applied by a disinterested third party buyer (as verified by the AIP) due to all insurable QA deficiencies described in the SP divided by the local market price in effect on the date the production was sold. Because the RIV is for all insurable QA factors, do not add additional DFs from Sections A or B of the SP.

(b) Mycotoxins (other than Vomitoxin), that has been sold prior to 60 days after the calendar date for the EOIP and was transported directly from the field to the buyer or transported directly from the field and put into commercial storage without going into farm-storage, the DF will be the RIV applied by a disinterested third party buyer (as verified by the AIP) due to all insurable QA deficiencies described in the SP divided by the local market price in effect on the date the production was sold. Because the RIV is for all insurable QA factors, do not apply additional DFs from sections A or B of the SP.

If the level of Aflatoxin, Fumonisin, or Vomitoxin is at the level shown in (5) (f) below, the 60 day time limit does not apply. The claim cannot be completed until such production is sold and the RIV applied by the buyer is known. The claim will be completed in accordance with section C3 of the SP.

(c) RIVs applied by the buyer may be increased for:

(i) Cost of conditioning the production when the RIV that would have been applied by the buyer is reduced for conditioning, provided the resulting RIV does not exceed the original RIV plus the conditioning costs.

(ii) Fair consideration to deliver sold production qualifying under section C1a, C2ai, C3ai, and C3bi of the SP to the buyer outside the insured's local marketing area (distant market) if a lower RIV is available at the distant market, provided the resulting RIV does not exceed the RIV in the insured's local marketing area and the amount of the fair consideration is usual, reasonable, and customary.

N. Settlement of Claims for Crops Having QA Provisions in Section C of the SP (continued)

(5) Use the applicable pre-established DFs in sections C1b, C1c, C2aii, and C2aiii, C2aiv, C2av, and C2b of the SP, (the DFs are described in the SP for production qualifying for QA under section C of the SP) in addition to any applicable DFs from section A or B2 of the SP for production containing:

(a) Vomitoxin only that is unsold or sold to other than a disinterested third party prior to 60 days after the calendar date for the EOIP.

(b) Vomitoxin that is unsold 60 days after the calendar date for the EOIP, fed, utilized in any other manner, or is sold to other than a disinterested third party.

(c) Aflatoxin and Fumonisin that is unsold and that is in commercial storage (transported directly from the field and put into commercial storage, without going into on-farm storage) prior to 60 days after the calendar date for the EOIP.

(d) Aflatoxin and Fumonisin that is unsold 60 days after the calendar date for the EOIP.

(e) Aflatoxin and Fumonisin that is not sold prior to 60 days after the calendar date for the EOIP and that is UH, stored on-farm or initially put in on-farm storage and later transported to commercial storage, fed, used in manner other than feed, or sold to other than a disinterested third party.

(f) The applicable DFs in sections C1b, C1c, C2aii, C2aiiii and C2b of the SP are used for Aflatoxin with levels of 20.1-300 ppb, Vomitoxin with levels from 5.1-10.0 ppm (2.1-10.0 ppm for Wheat), or Fumonisin with levels from 2.1-100.0 ppm. When the level for the specific mycotoxin exceeds the maximum level shown above, use the DF shown in (h) below.

(g) Substances or conditions other than Aflatoxin, Vomitoxin, or Fumonisin that are injurious to human or animal health (sections C2aiv, C2av, C2bii, and C2biii of the SP), use a DF of .500.

(h) For production that has Aflatoxin levels in excess of 300.0 ppb, Vomitoxin levels in excess of 10.0 ppm, Fumonisin levels in excess of 100.0 ppm, or any other substance or condition that exceeds the maximum amount allowed, a claim will be held open until such production (including UH production) is sold, fed, used, or destroyed, but not more than 365 days after the calendar date for the EOIP. Production that remains unsold, or has not been used or destroyed more than 365 days after the calendar date for the EOIP will not be adjusted for any quality deficiencies listed in Section C of the applicable SP. The DFs are as follows:

(i) 1.000 for production destroyed in a manner acceptable to the AIP.

N. Settlement of Claims for Crops Having QA Provisions in Section C of the SP (continued)

(ii) .500 for production containing:

(A) Aflatoxin, Fumonisin, or any other substance or condition (except for Vomitoxin), that was in on-farm storage, fed, utilized in any other manner, put in on-farm storage and then transported to commercial storage and sold, or sold to other than a disinterested third party; or

(B) Vomitoxin only, that was fed, utilized in any other manner or sold to other than a disinterested third party.

(iii) For sold production containing Vomitoxin, determine the DF from the RIV applied by the buyer (a disinterested third party as verified by the AIP).

(iv) For sold production containing Aflatoxin, Fumonisin, or any other substance or condition (except for Vomitoxin), determine the DF from the RIV applied by the buyer (a disinterested third party as verified by the AIP) for production transported directly from the field to the buyer or transported directly from the field and put into commercial storage and later sold without going into on-farm storage. No other quality factors contained in sections A or B of the SP will be considered.

(6) For production qualifying under item (5) above, an automatic extension of time will be allowed for the insured to submit their claim for indemnity, not to exceed 90 days after the calendar date for the EOIP. This does not limit the insured's ability to request an additional extension of time to submit a claim for indemnity in accordance with section 14 of the BP. For production that contains mycotoxins or any other substance or condition that exceeds the maximum amount allowed, the claim will be held open until the production is sold, fed, used, or destroyed, but not more than 365 days after the calendar date for the EOIP. Refer to paragraph 702 for additional information.

N. Settlement of Claims for Crops Having QA Provisions in Section C of the SP (continued)

(7) Following is a table of FDA-issued recommended, advisory, or action levels for the most common mycotoxins found in production and the section in the SP for the level of mycotoxin. The advisory and action levels used in this table are current as of the issuance of this handbook. Always verify what the current FDA action or advisory levels are. These action levels are subject to change.

	FDA Recommended, Advisory, or Action Levels	Aflatoxin (FDA Action Levels)	Fumonisin (FDA Recommended Levels)	Vomitoxin (FDA Advisory Levels)
Category 1 (No QA)	No FDA recommended, advisory, or action levels for this category; i.e., it is safe for humans and animals.	0.0 ppb - 20.0 ppb	0.0 ppm – 2.0 ppm	0.0 ppm – 2.0 ppm (Wheat only)
Category 2 (QA applied, but no FDA recommended advisory or action level)	No FDA recommended advisory, or action levels.			2.1 ppm – 5.0 ppm (Wheat only)
Category 3 (Injurious to human and some animal health.)	FDA-recommended, advisory, or action levels for this category	20.1 ppb – 300.0 ppb	2.1 ppm – 100.0 ppm	5.1 ppm – 10.0 ppm (For Wheat and all other crops)
Category 4 (Exceeds the maximum level FDA has found safe for humans or animals use).	Exceeds maximum FDA-recommended, advisory, or action level	300.1 ppb and above	100.1 ppm and above	10.1 ppm and above

(8) Examples of DF and QAF determinations for claims containing substances or conditions under section C of the SP.

N. Settlement of Claims for Crops Having QA Provisions in Section C of the SP (continued)

Example 1: Combination of type/level of damage with pre-established DF and type/level of mycotoxin (Aflatoxin) damage and disposition of the damaged production for which an RIV can be used.

The corn was sold without going into farm storage to a disinterested third party prior to 60 days after the calendar date for the EOIP. Corn had a low TW of 46 pounds and had Aflatoxin damage of 150 ppb. It was determined that there was a 65 cents/bu. RIV for Aflatoxin and a 16 cents/bu. RIV for low TW. There is a DF of .062 for 46-pound TW listed in section A of the Corn SP and there is a .300 DF for 150 ppb Aflatoxin listed in the Corn SP. Because the Aflatoxin damaged production was sold without going into farm storage to a disinterested third party, prior to 60 days after the calendar date for the EOIP, the pre-established DFs in section A and C of the corn SP will be ignored. In this example, the RIV for the low-test weight and the RIV for the Aflatoxin applied by the buyer will be used to establish a DF for each of these types of damage.

The LMP for corn is $2.20. The QAF for the damaged corn is determined as shown in the following three steps:

(a) .65 RIV for mycotoxin
+ .16 RIV for test weight
$ .81 Total RIV

(b) .81 (Total RIV) ÷ 2.20 (LMP) = .368 (DF)

(c) 1.000 - .368 = .632 QAF

Example 2: Same scenario as Example 1 above except the Aflatoxin level in the corn is 450 ppb. If the production was transported directly from the field to the buyer or put into commercial storage without going into on-farm storage and later sold [1/], the DF will be determined from the RIV applied by the buyer.

N. Settlement of Claims for Crops Having QA Provisions in Section C of the SP (continued)

Example 3: Same scenario as Example 1 above except the Aflatoxin level in the corn is 450 ppb and the insured opts to destroy the production. The AIP verifies the production is destroyed in a manner acceptable to the AIP. Since the Aflatoxin level exceeds the FDA maximum of 300 ppb for Aflatoxin and the insured opted to destroy the production, the pre-established DF will be 1.000. The resulting QAF will adjust the damaged production to zero PTC.

(a) DF is 1.000
(b) 1.000 ─ 1.000 = .000 QAF

Example 4: Same scenario as Example 1 above, except the Aflatoxin level is 450 ppb and the insured farm-stored the production and then sold [1/] it. The buyer applied a total RIV of $1.75 for the 450 ppb of Aflatoxin and 46 pound test weight.

Because the Aflatoxin level exceeds 300 ppb and the production was in on-farm storage, the pre-established DF of .500 listed in the SP applies. No other quality factors contained in sections A or B of the SP will apply.

Example 5: Same scenario as Example 1 except the production was farm-stored and the AIP determines the production has ZMV. The insured did not or will not destroy the production in a manner acceptable to the AIP. The only DF that can be applied is the .062 DF for the 46 pound test weight. The DF for the 150 ppb Aflatoxin cannot be applied. This is because section D6 of the SP indicates that if production having ZMV has a quality deficiency listed in section C is not destroyed in a manner acceptable to the AIP or the insured makes no attempt (or refuses) to destroy the production, such production will not be adjusted for any quality deficiencies listed in section C.

Example 6: Same scenario as Example 5 except the production is farm-stored and the production is not ZMV. The .062 DF for 46 pounds test weight listed in section A of the SP and the .300 DF for 150 ppb Aflatoxin listed in section C are added together (.062 +.300) for a total DF of .362 and a resulting QAF of .638.

N. Settlement of Claims for Crops Having QA Provisions in Section C of the SP (continued)

Example 7: For Vomitoxin there are no advisory levels for human consumption for raw grain, just finished production. FDA states the reason there are no advisory levels for Vomitoxin in raw grains destined for human consumption is because most of the Vomitoxin is removed during the milling process. The maximum level FDA lists for any animal use is 5 ppm (for swine and most animals); however, for some animals it is less. Therefore, the FDA advisory level is 5 ppm.

However, for Wheat only, QA is allowed when the approved lab results show Vomitoxin in excess of 2.0 ppm. For unsold production, the Wheat SP contains pre-established DFs for Vomitoxin from 2.1 to 10.0 ppm. Refer to Malting Barley Endorsement for malting barley. For all other crops, Vomitoxin must be in excess of 5.0 ppm before QA applies.

Example 7A:

The following example is for unsold wheat in excess of 2.0 ppm of Vomitoxin but not greater than 10.0 ppm (applicable to section C of the SP plus any applicable DFs from section A or B2 of the SP).

SITUATION 1	IF Elevator Discounts:	THEN DF is:	IF Elevator Discounts	THEN DF is:
54 # of Hard Red Spring Wheat	$.30	N/A	$0.30	N/A
8% damage	$0.50	N/A	$0.90	N/A
3.1ppm Vomitoxin	$0.40	.329	No Discount	.329
TOTAL DF		.329		.329

TW or kernel damage has not reached a level for which quality would apply for the wheat as described in the Small Grains CP. No DF for TW or damage is shown in section A of the SP, even though the elevator has applied a discount.

N. Settlement of Claims for Crops Having QA Provisions in Section C of the SP (continued)

Example 7B:

The following example is for wheat in excess of 2.0 ppm of Vomitoxin but not greater than10.0 ppm. The wheat was sold to a disinterested 3rd party, prior to 60 days after calendar date for EOIP (applicable to section C1 of the SP.)

SITUATION 2	IF Elevator Discounts:	THEN RIV is:	IF Elevator Discounts	THEN RIV is:
54 # of Hard Red Spring Wheat	$0.10	N/A	$0.10	N/A
11% Damage	$0.50	$0.50	$0.50	$0.50
5.1 ppm Vomitoxin	$0.40	$0.40	No Discount	N/A
TOTAL RIV		$0.90		$0.50

5.1 ppm of Vomitoxin and 11% damage (grades U.S. # 5) both qualify the grain for quality. Even though there are DFs. RIVs are used for all insurable deficiencies to determine the applicable DFs because the grain is sold and does not exceed 10.0 Vomitoxin. However, if the 11% damage is the only damage that the buyer discounts, as in the example on the right-hand side, then there is no adjustment for the Vomitoxin damage.

Example 7C:

The following example is for sold wheat in excess of 2.0 ppm of Vomitoxin but not greater than 10.0 ppm. The wheat was sold to a disinterested 3rd party, prior to 60 days after calendar date for EOIP (applicable to section C1 of the SP.

SITUATION 3	IF Elevator Discounts:	THEN RIV is:	IF Elevator Discounts	THEN RIV is:
52# of Hard Red Spring Wheat	$0.40	$0.40	$0.40	$0.40
18% Damage	$0.60	$0.60	$0.80	$0.80
5.1 ppm Vomitoxin	$0.50	$0.50	No Discount	N/A
TOTAL RIV		$1.50		$1.20

The 52 # TW, 18% damage (causes grain to grade # 5) and 5.1 ppm Vomitoxin all qualify the grain for quality. However, if the 52# TW and 18% damage are the only types of damage that the buyer discounts, as in the example on the right-hand side, then there is no adjustment for the Vomitoxin damage. RIVs applicable for same reasons as in Example 7 B above.

N. Settlement of Claims for Crops Having QA Provisions in Section C of the SP (continued)

Example 8: The insured commingles 3 units of farm-stored corn having Aflatoxin but no other quality deficiencies. The insured has acceptable weight records for each of the 3 units. The total production in the storage structure is in within three percent (3%) of the total weight records for the 3 units. (Refer to paragraph 1002 for weighed and farm-stored production procedures.) The insured sells all of the grain prior to 60 days after the calendar date for the EOIP. The quality adjustment is handled as illustrated in this example:

(1) First determine what section of the QA section of the SP the corn qualifies under.

Unit 0001-0001OU, 3,000 bu. of corn with 10 ppb of Aflatoxin. With this amount of Aflatoxin, this corn does not qualify for QA.

Unit 0001-0002OU, 5,000 bu. of corn with 500 ppb Aflatoxin. With this amount of Aflatoxin and other quality deficiencies, this corn falls under section C3 of the QA section of the SP.

Unit 0001-0003OU, 7,000 bu. of corn with 50 ppb Aflatoxin. With this amount of Aflatoxin and other quality deficiencies, this corn falls under C2 of the SP.

(2) The claims cannot be settled until all production is sold, fed, used, or destroyed, but not more than 365 days after the calendar date of the EOIP since some of the production falls under section C3 of the SP.

(3) Determining quality for Unit 0001-0001OU. Since unit 0001-0001OU does not qualify for QA due to Aflatoxin, no quality will be allowed for this deficiency.

(4) Determining quality for Units 0001-0002OU and 0001-0003OU

Unit 0001-0002OU will be adjusted using a DF of .500 since the production exceeds the 300 ppb of Aflatoxin and was in on farm-storage.

Unit 0001-0003OU, the 7,000 bu. will be adjusted using the pre-established DF of .100 for 50 ppb of Aflatoxin listed in chart table in section C2c of the SP.

O. Settlement of Claims Involving Mycotoxins (or Other Condition or Substance) for Crops Having QA provisions in the CP

This does not apply to barley, corn, canola, flax, grain sorghum, oats, rye, safflowers, soybeans, sunflowers, and wheat. Check the CP for applicable crops.

(1) A sample of UH or harvested production from each unit, field, or subfield must be taken and submitted for mycotoxin testing. QA will be based on the test results of each sample, the actual value of the damaged production and any other type/level of insurable damage qualifying for quality adjustment that affected the value of the production. No other dollar and cent discounts are allowed in the value of the damaged production as stated in subparagraph 1102G(8)-(10). Also, refer to paragraph 1102 for more QA information.

(2) The QAF is determined by dividing the local market value (actual dollar and cents value (or salvage value for some crops)) of the damaged production by the LMP (Base Contract Price for some crops) as defined in the specific CP or as otherwise specified in the CP; e.g., price election.

(a) The actual dollar and cents value for the damaged production also includes the reduced value for other damage qualifying for QA (e.g., kernel damage, low-test weight, etc.) but shall not reflect a reduction due to uninsured causes or drying charges. The actual value of the damaged production is the amount:

(i) Applied by the buyer for sold production (refer to the exception in subparagraph J); or

(ii) As determined by the AIP for unsold production:

(b) The QAF is rounded to three (3) decimal places. The PTC remaining after any reduction due to excessive moisture (in accordance with the applicable CP) is multiplied by the QAF (not less than zero) to determine net PTC.

(c) Refer to subparagraph 1102G for information regarding damage other than mycotoxin or substances injurious to human or animal health.

(3) Follow the procedures in subparagraph 1102H when there is no dollar and cents value (ZMV) for the damaged production in the local market and fair consideration to deliver such production to a distant market is applicable.

(4) Refer to subparagraph 1102G for additional procedures regarding:

(a) Determination of the actual dollar and cents value of the damaged production when production is unsold, fed, sold or otherwise disposed of, or when the production is under a speculative-type contract, not a processing contract.

O. Settlement of Claims Involving Mycotoxins (or Other Condition or Substance) for Crops Having QA provisions in the CP (continued)

(b) Reducing the dollar and cents value of the damaged production when a higher value for the production can be obtained due to:

(i) Conditioning costs of the damaged production, or
(ii) Transportation costs.

(5) A claim for indemnity will not be finalized until all determinations as stated in subparagraph 702(8) are met.

(6) Following is a table for crops that do not have QA provisions in the SP. The table contains FDA-issued recommended, advisory, or action levels for the most common mycotoxins found in production. The advisory and action levels used in this table are current as of the issuance of this handbook. Always verify the current FDA action or advisory levels. These action levels are subject to change.

Category	FDA Recommend, Advisory, or Action Levels	Aflatoxin (FDA Action Levels)	Fumonisin FDA Recommended Levels	Vomitoxin (FDA Advisory Levels)
Category 1 (No Quality Adjustment)	No FDA-recommended, advisory, or action levels for this category; i.e., it is safe for humans and animals	0.0 ppb - 20.0 ppb	0.0 ppm –2.0 ppm	0.0 ppm – 5.0 ppm
Category 2 (Qualifies for quality adjustment)	FDA-recommended, advisory or action levels for this category – safe for some types of animals	20.1 ppb – 300.0 ppb	2.1 ppm – 100.0 ppm	5.1 ppm-10.0
Category 3	Exceeds maximum FDA-recommended, advisory, or action levels	300.1 ppb and up	100.1 ppm and up	10.1 and up

(7) If any Federal or State agency requires destruction of any insured crop or crop production, as applicable, because it contains levels of a substance, or has a condition that is injurious to human or animal health in excess of the maximum amounts allowed by the Food and Drug Administration, other public health organizations of the United States or an agency of the applicable State, the insured must destroy the insured crop or crop production in a manner acceptable to the AIP and zero production will be counted. Refer to subparagraph 1102H(6) for a definition of Acceptable Destruction Methods and other information about destruction and verification of destruction.

1110-1200 (Reserved)

PART 12 UNUSUAL/CONTROVERSIAL CASES & SPECIAL CLAIMS PROCEDURES

Section 1 General Information

1201 General Procedures Involving Unusual or Controversial Cases

Whenever the adjuster is on an inspection and suspects problems in the information given by the insured or in previous contract information reported to the AIP (e.g., entity, APH, etc.), follow the procedures listed below that are applicable to the situation.

(1) Complete the inspection according to procedure.

(2) Document findings during the on-the-farm inspection, on the claim (MPCI Non-Waiver Agreement if the AIP uses one rather than a claim) and on a Special Report. Refer to paragraph 1202 for instructions on how to document findings.

(3) Obtain the insured's signature on the claim (or MPCI Non-Waiver Agreement). Obtain the insured's signature on the Special Report, if possible.

(4) If a PW is used, do not sign the claim. If a MPCI Non-Waiver Agreement is used, the adjuster's signature is required.

(5) Document on a Special Report the potential need for GSIs or pre-harvest appraisals, whenever the need appears, to protect the AIP's position in the case of a controversial claim due to uninsured causes of loss or not following recognized GFPs. Send a copy of the Special Report to the supervisor designated by the AIP.

1202 Report Writing

A. Principles of Report Writing

A report is written to convey concisely what the adjuster finds while on an inspection, the reason for the inspection, any problems the adjuster encounters, and to indicate follow-up actions that may be necessary.

(1) The report should be sufficiently flexible to fit the special requirements of the subject matter and the individual(s) to whom it is submitted.

(2) The report should be thorough and concise.

(3) The tone of the report should be objective and factual.

(4) The report should be legible.

(5) Use illustrations such as sketch maps, photos, videos, bin locations, etc., whenever they will promote a better understanding of the report.

A. Principles of Report Writing (continued)

(6) Documentation should be reviewed with the next level of supervision at the time the formal report is submitted.

(7) Do not make recommendations.

B. Report Arrangement

There are many acceptable arrangements for reports as indicated below:

(1) The title of the report should be concise.

(2) If the report is lengthy or detailed, a table of contents should list the location of major sections and subsections.

(3) The report should have an introduction that tells why the report was written.

(4) The body should clearly explain the facts or findings presented in the introduction.

(5) The summary is the most important element of the report. State the problem simply, along with any significant findings. Keep the summary brief to maximize its impact. Ideas should be presented in short paragraphs or numbered sentences. State conclusions without elaboration.

1203 Dealing with Problem Cases

When dealing with any controversial case, adjusters are advised not to work alone. As instructed by the AIP, a supervisor, another adjuster, or other AIP representative may accompany the adjuster on any field or farm inspection involving a problem case.

(1) Although the potential use of information for legal action cannot be denied, do not voluntarily discuss any possible legal action, as it will discourage a candid discussion. If the insured is prepared to make a statement, it should be submitted in the insured's own handwriting, if possible, and signed and dated by the insured. Do not assist the insured with the contents or wording of the statement. It does not have to be grammatically correct. If the adjuster prepares a statement for the insured, the insured must dictate word for word to the adjuster. The insured should read it and agree to its contents by signing and dating the statement. If a minor error is made in the body, it should be corrected and then initialed by the insured. It is also helpful if the statement explains its purpose, but not in a manner to exclude other uses the statement may have.

(2) Document the insured's claim file with photographic or video evidence. Refer to paragraph 202 for specific requirements.

***

(3) An insured may attempt to misinform the AIP with respect to insurability or losses. The purpose of the misinformation is usually to qualify for or enhance an indemnity payment or to be consistent with an erroneous position taken with another agency. The adjuster must research the facts upon which the AIP should act.

(4) An AIP employee or an adjuster is not a law enforcement agent. In the ordinary course of duty, a statement or fact obtained by an AIP employee or adjuster may be admissible in a court of law. The same statement or fact obtained by law enforcement officials may be admissible only if prescribed procedures are followed. This distinction is based on the purpose of the inquiry. As long as reviews are conducted for the sole purpose of obtaining information necessary for the contractual operation of the insurance program, the information obtained is not considered an illegal search or seizure.

(5) Questionable claims may be investigated when there is some indication that legal action may occur. This is still a legitimate function as long as the information is intended for AIP use. Consideration must not be given as to the eventual evidentiary value of the information. If it is discovered upon cross examination that a particular farm visit was for the purpose of obtaining evidence for criminal or civil prosecution, that visit could be considered to have a law enforcement purpose. The absence of prescribed law enforcement procedures would render the information inadmissible.

(6) It should be kept in mind that any promises made to an insured for cooperation may render the information inadmissible, and possibly impose civil liability on the person(s) who made such an offer. Any evidence, no matter how small, indicating that the information supplied by the insured was in consideration of a waiver of civil or criminal charges can void a successful prosecution or, at the least, devalue the evidentiary weight of such evidence.

1204 Controversial Claim Procedure

If the insured will not agree with the adjustment data, refer the case to the AIP. The AIP representative and the adjuster will review the case with the insured and make every effort to resolve it.

If an agreement cannot be reached with the insured, AIPs may use the procedures in subparagraph A or the AIP may use a MPCI Non-Waiver Agreement. If a MPCI Non-Waiver Agreement is used, follow the instructions provided by the AIP for completing this form, and follow the documentation procedures in subparagraph B below. However, if neither the procedures in subparagraph A nor a MPCI Non-Waiver Agreement is used, the AIP still must use the procedures for documenting the controversial situation as stated in subparagraph A(3) below.

A. Prepare Two Claims

(1) One claim showing the data submitted by the insured, signed only by the insured. The insured should be provided a copy of the claim and any appraisal worksheets or other documents signed by the insured at the time of this inspection.

(2) The other claim showing the data determined and the date signed by the AIP representative(s).

(3) Submit both sets of the claims to the person or office designated by your AIP along with complete documentation. Refer to subparagraph B below.

B. Documentation

(1) Conduct interviews with the insured, the insured's employees, neighbors, other persons having knowledge of the facts in the case, and any additional individuals the AIP determines to have information relevant to the case. AIP representatives conducting the interview should be accompanied by another individual represented by the AIP.

(2) Collect signed statements by the insured and other persons interviewed. The insured should personally prepare a detailed Special Report to document the points of disagreement in support of the claim as submitted.

(3) Conduct appraisals of potential production and uninsured COL in the insured field(s) and neighboring fields. Make appraisals explicit as to potential production and uninsured causes i.e., "16 bu./ac. potential, 86 weed plants in 36 square foot area." Any neighboring field used for comparison purposes should be of similar soil type, farmed with similar cultural practices, and planted to the same crop as the insured field. Properly document photograph(s) or video(s) showing the damaged crop and identifiable landmarks of both insured and neighboring fields damage.

(4) Obtain harvested production data from insured and neighboring field(s) and include photographs, if pertinent to the case.

(5) Include signed statements by AIP representatives involved in the case. Do not include any evidence, insinuations or opinions which do not have complete supporting facts in the statements, nor references to the insured's personal habits or traits. Prepare the statements in a manner that will lead the reader to a logical conclusion based upon the facts presented.

(1) Most pesticides have a period of time that must lapse after they have been applied before it is safe to enter the treated field without wearing protective clothing and equipment. Normally, this is at least the time necessary for sprays to dry and dusts to settle (8-48 hours). MSDS contain pertinent detailed information about specific chemicals including health hazards, emergency and first-aid, and the safe re-entry period after a chemical has been applied. Some USDA field offices such as FSA and NRCS house MSDSs. Other local agencies may have these data sheets for possible use. In addition, each state has a poison control center, which normally carries a toll-free number and maintains a 24-hour consultant service in the diagnosis and treatment of human illnesses resulting from toxic substances. Check with NRCS or FSA for MSDSs or other literature pertaining to pesticide or chemical hazards.

(2) At the time the appointment is set up, ask the insured or the insured's representative if the field, orchard, or vineyard to be entered has been treated with pesticides or other chemicals. If the field, orchard, or vineyard is to be treated or has been treated within this time period, reschedule the appointment(s) and document the visit accordingly.

1206-1220 (Reserved)

1221 Controversial Claim: Uninsured Causes of Loss

A. General Information

(1) The contract provides protection only against unavoidable loss of production due to the named insured COL that occur during the insurance period. Any loss from the cause(s) named is not insured if it was avoidable.

Example: Loss due to insured taking inadequate measures to control insects, plant disease, or weeds when such measures are practical and have proven effective in the area, which is considered avoidable and is an uninsured COL. However, if the insured uses recognized and accepted measures to control insects or plant disease (insured COL) or weeds, these causes are considered unavoidable insured COLs. Although weeds are not a stated insured COL, FCIC will consider damage caused by weeds as insured if recognized and accepted control measures were used, or if adverse weather directly caused the control measures to be less effective.

(2) Uninsured COL may be determined at the time of:

(a) Preliminary inspections.

(b) Final inspections.

(c) Quality assurance reviews.

(d) Farm visits made to obtain an original AR, revise an AR, or complete a GSI.

(e) Making appraisals for APH record keeping purposes.

(f) Driving by an insured farm on other assignments. Such observations will be documented on a Special Report and provided to the insured, advising the insured the AIP is aware of the damage by livestock, herbicide drift, etc.

(3) The named uninsured COL can be found in the BP, CP, and AD. COL not listed as an insured peril, or that are not due to a naturally occurring event are also considered uninsured COL. For example, theft of a crop is an uninsured COL. Refer to paragraph 843 for a list of uninsured COLs that are specified in the BP.

(4) In accordance with the BP, flooding from water contained by any governmental, public, or private dam or reservoir project is an uninsurable COL. If the elevation of the contained water (e.g. subject reservoir) as measured by the Corps of Engineers or other public source exceeds the elevation of the insured acreage at the time of loss, the flooding will be considered to have been caused by the contained water (uninsured cause), unless the insured can prove otherwise. Refer to subparagraph 843(6) for more information, including details on verification and documentation.

A. General Information (continued)

(5) Any loss of marketability of crops due to misapplication of chemicals or application of chemicals which are controversial, withdrawn from sale, etc., is not insured under the insurance contract unless provided specifically as a condition of the contract.

(6) The AIP cannot indemnify an insured when all of the loss is due solely to uninsured COLs. In such cases, the appraisal per acre must not be less than the production guarantee or amount of insurance. When the appraisal is more than the production guarantee use the actual appraisal.

(7) In every case, establish whether the damage or loss is due solely to one or more unavoidable insured COLs, to both unavoidable insured COLs and uninsured COLs, or solely to one or more uninsured COLs (including avoidable insured COLs).

(8) If during the initial inspection it is determined that the loss adjustment will involve uninsured COLs, immediately contact the AIP and advise them of the situation and request assistance with the adjustment. Circumstances may warrant that an AIP claim's supervisor accompany the adjuster.

(9) Judgment is extremely important for establishing production lost due to uninsurable COLs. A working knowledge of cultural practices and technical aspects of growing the crop in the area as well as scientifically sound research and publications from agricultural experts is essential.

(10) If at all possible, the insured or the authorized representative should be present for appraisals involving uninsured cause(s) of loss. All aspects of the appraisal must be thoroughly discussed and explained to the insured. Mutual agreement is imperative if the insured is to be expected to sign the claim for indemnity and Special Report.

B. Included in Total Production to Count

Most CPs require that total PTC include all of the following:

(1) An appraisal for potential production lost due to uninsured causes. Uninsured COL appraisals are not included in APH determinations.

(2) An appraisal of not less than the per-acre guarantee (per-acre DO for dollar crops) or not less than the amount of production that when multiplied by the harvest price equals the RP GPA for crops under RP, for any acreage:

(a) abandoned,
(b) put to another use without the AIP's prior written consent,
(c) damaged solely by an uninsured cause, or
(d) for some crops, for which the insured failed to provide records of production that are acceptable to the AIP.

B. Included in Total Production to Count(continued)

RP Example: Acres 50
Production GPA 115 bu.
PTC always valued at the Harvest Price

Scenario 1: Projected price ($3) greater than Harvest price ($2)

50 x 115 x $3 = $17,250 RP guarantee
$17,250 ÷ $2 = 8,625 bushels PTC

Scenario 2: Projected price ($3) less than Harvest Price ($4)

50 x 115 x $4 = $23,000 RP guarantee
$23,000 ÷ $4 = 5,750 bu. PTC

With Harvest Price Exclusion:
50 x 115 x $3 = $17,250 RP guarantee
$17,250 ÷ $4 = 4,312.5 bu. PTC

(3) Some CP may also require notification to the AIP when the crop will be direct marketed. Failure to provide such notification may result in at least an appraisal of the per-acre guarantee or per acre DO.

C. Determining Amount of Loss Due to Uninsured Cause(s)

(1) Use a visual inspection of production on same or similar crop(s) on other farms in the area to identify the possible presence of an uninsured COL, and if needed, compare productivity and yields of surrounding farms. Refer to subparagraphs E and F.

(2) Verify the COLs (e.g. apparent loss may be poor weed control; however, the damage may have been indirectly caused by insufficient rainfall to activate a properly applied herbicide).

(3) Determine and document on separate appraisal worksheets, the amount of damage attributed to uninsured and insured COL. Such determinations may be based on (a) and/or (b):

(a) Agricultural expert's published materials or written opinion as to the yield loss attributable to the insurable and uninsurable COL; or

(b) Comparison of productivity and yields of surrounding farms. The suggested comparison processes are found in subparagraphs E and F.

(4) If an uninsured COL is identified (such as: failure to apply adequate fertilizer, herbicide, fungicide, etc.), it should be supported by agricultural publications, fact sheets, chemical labels, other research, or agricultural experts written opinion.

C. Determining Amount of Loss Due to Uninsured Cause(s) (continued)

(5) Conduct a separate appraisal for any potential production remaining. Discuss appraisals with insured. Retain all appraisals as part of the claim file.

(6) Ask the insured to document his/her efforts to prevent or control the situation (chemical used and/or methods followed, etc.). Record the number of applications and dates they were applied, supported by receipts or other verifiable third party records. Obtain copies of all supporting documents and retain as part of the claim file.

(7) Obtain and retain agricultural expert's written or published materials and/or recommendations on production methods to prevent, control, mitigate, or manage the crop given the agronomic situation of the producer, including weather conditions, disease, pest risks, etc. to further support uninsured cause determinations.

(8) Photograph the evidence of the crop in question and surrounding farms with identifying landmarks in each photograph.

(9) Aerial photographs, satellite imagery, soil maps, and/or topography maps used as a basis to determine crop productivity potential may also be used to support the determinations of uninsured COLs and, if used, are to be retained as part of the claim file. For example, satellite imagery (and digital aerial photographs, highway, map, etc.) with Arc map may be used to develop a real time three dimensional image of the farm as it would have appeared prior to the uninsured COL.

D. Failure To Follow Good Farming Practices

The contract does not cover any loss that is due to the insured's failure to follow recognized GFPs. Refer to the GFP Determination Standards Handbook for GFP determinations. Such farming practices vary by crops and areas. Some uninsured COLs due to failure to follow recognized GFPs include:

(1) Failure to plant the recommended quantity of seed or transplants;

(2) Improper seedbed preparation;

(3) Failure to properly plant, care for, or harvest the insured crop;

(4) Failure to timely or properly apply the amounts of fertilizer for the crop and soil needs, as recommended by agricultural experts;

(5) Failure to timely or properly apply control measures recommended by agricultural experts for the control of insects, plant diseases, or weeds;

(6) Failure to apply adequate water under an IRR practice, failure to timely apply irrigation water, and/or failure to apply the recommended quality of irrigation water;

D. Failure To Follow Good Farming Practices (continued)

(7) Interplanting another crop (except winter legumes) into a growing insured cotton crop or other insured crop for which the CP do not provide coverage to do so;

(8) The use of chemicals resulting in damage to the insured crop; or

(9) Adherence to land lease restrictions (e.g., Leases for land owned by the State used primarily for wildlife conservation purposes which restrict the use of certain chemicals, restricts access to the land, etc.) result in failure to follow the recognized GFPs for the insured crop(s) and area.

E. Using Comparable Acreage to Determine Uninsured and/or Insured Cause(s) of Loss

(1) When insured COLs are present in the area, the yield potential of the crop prior to the occurrence of any uninsured COL must be determined if possible.

(2) Yield potential of the crop prior to the occurrence of any uninsured COL is determined with the use of comparable acreage as the basis for determining the per-acre yield due to uninsured COLs.

(a) If the insured has comparable acreage, this acreage should be used to determine the per-acre yield basis for uninsured COLs. The per-acre yield difference between the comparable acreage and the acreage with damage from an uninsured COL is the per-acre uninsured cause appraisal.

(b) When comparable acreage is not available on the insured's farming operation, but is available on other producer's farming operations in the area, refer to subparagraph F.

(c) When comparable acreage is not available on the insured's farming operation or other producer's farming operations in the area, refer to subparagraph F(2).

(3) Appraisals for uninsured COLs and the impact on the loss must always be discussed and explained to the insured. Always include full information in the report as to the uninsured COLs and the basis used for determining the amount of production lost by such causes.

F. Using Other Farms to Determine Production Lost Due to Uninsured Cause(s)

Give proper consideration to what other producers whom did not have uninsured COLs present in the area. For crops which require cultivation or other care during the growing period, it is not unusual for an insured to allege that because of some insured COL, such as excessive rain, it was not possible to care for the crop in a proper manner. While this may be true, consider what other producers in the surrounding area accomplished under similar conditions. The following formula may be used to determine yields to use for an uninsured COL.

F. Using Other Farms to Determine Production Lost Due to Uninsured Cause(s) (continued)

(1) When comparable acreage is not available on the insured's operation, but is available on those of other producers in the area, try to get permission to appraise the other producers' fields to use as a comparison.

Example: The insured's acreage, which has been damaged by uninsured COL, appraised at 60.0 bu./ac. The adjuster obtains permission to appraise the fields of two neighboring producers who have comparable acreage that has not been damaged by uninsured COLs. The adjuster would conduct appraisal(s) as follows:

Producer No. 1: Field appraisals indicate 105.0 bu./ac.
Producer No. 2: Field appraisals indicate 99.0 bu./ac.

The average yield produced in the area would be 102.0 bu./ac., as determined from the average of producer's 1 and 2 appraisals (105.0 + 99.0 ÷ 2 =102.0). Compare the insured's 60.0 bu./ac. appraisal to the 102.0 bu. average area yield per acre as a basis to determine the per acre amount of production the insured lost due to uninsured causes. e.g., 102.0 bu. – 60.0 bu. = 42.0 bu. for uninsured cause appraisal.

(2) When comparable acreage is not available on the insured's farming operation or other producer's farming operations in the area, the following may be used as a method to determine a yield to use for uninsured cause(s):

Example: Insured's approved APH Yield: 90.0 bu.
Producer No. 1: APH yield: 85.0 bu.
Producer No. 2: APH yield: 83.0 bu.

Total of 258.0 bu. ÷ 3 = 86.0 bu. average estimated yield.

Deduct any per-acre potential production lost in the area due to insured COL from the average estimated yield. For example, it is determined that due to an insured COL an average of 20.0 bu./ac. has occurred in the area.

Under normal conditions the AIP estimates the crop will produce 86.0 bu./ac. in the area (based on an average of the yields located on 3 farms of similar productivity in the area). However, because there is also an insured COL of 20.0 bu./ac., it must be deducted from the 86.0 bu. resulting in an estimated yield of 66.0 bu./ac. without uninsured causes.

F. Using Other Farms to Determine Production Lost Due to Uninsured Cause(s) (continued)

The appraisal completed on the insured's damaged acreage with the uninsured COL was 27.5 bu./ac. The difference between the estimated yield for the area and the appraisal of the acreage with the uninsured COL would be used as the per-acre uninsured cause appraisal:

66.0 bu. (estimated yield for area)
− 27.5 bu. (appraisal of insured's damaged acreage with uninsured causes)
38.5 bu. uninsured COL appraisal.

G. Documentation

Document on a Special Report the circumstances involved, bearing in mind that any individual reviewing the claim generally knows nothing about the circumstance beyond the information conveyed on a Special Report. The documentation should also include the method in subparagraph E or F used to determine the yield potential of the crop before any uninsured cause(s). Retain copies in the insured's file folder of all documents and records supporting the determination of failure to follow GFPs or the presence of uninsured COL.

H. Other Causes of Loss Not Insured

(1) Damage caused by water contained by any governmental, public, or private dam or reservoir project. Refer to subparagraph B above for more information.

(2) Chemical damage as listed in subparagraph I(2) below.

(3) Quarantine (e.g., Karnal Bunt in wheat or Plum Pox Virus in Peaches), unless the CP or SP insure loss of production (or trees) due to required destruction of the crop under a State or Federal quarantine.

(4) COLs not specified as insured COL in the CP or endorsement as limited by the AD.

(5) Fire when ignition source of the fire was not due to a natural cause or natural disaster. Refer to FAD-35, dated September 3, 2004.

(6) Inability to obtain labor, seed, machinery, repairs, or pesticides.

(7) Breakdown of machinery or failure of equipment due to mechanical defects.

(8) Damage by domestic animals or poultry.

(9) Neglect by the insured or any person in the insured's household connected with the farming operation.

(10) Theft of crop.

I. Partial Investigating Guide

Use the following to help detect any failure to follow recognized GFP:

(1) Livestock damage as indicated by tracks in the field, leaves stripped from stem or stalk, stem or stalk severed, grain head absent, or ears separated from the stalk. Percent of damage due to missing heads or ears can be determined as follows:

(a) Count missing heads or severed ear shanks and remaining heads or ears from a sample of 100 consecutive stalks.

(b) Divide the number of missing heads or ears by the determined original number of heads or ears to obtain the percent of damage.

(c) Divide the field into subfields if damage is limited to a specific area(s) or if damage is not uniform.

(2) Chemical damage caused by:

(a) Use of improper chemical;

(b) Residual (toxic) effect of chemicals used in the previous crop year(s) as a result of not following the label specifications and restrictions when the chemical was applied;

(c) Improper application (rates, methods, timeliness, label restrictions, etc.); and/or

(d) Chemical drift from spraying of adjoining field(s). This can be identified by an irregular pattern of damage showing leaf droppage or wilted, stunted, pale colored, dying, or dead plants.

(3) Failure to follow recognized GFPs adapted to the area, which have been successfully carried out by other producers in the area, following recommendations of agricultural experts. Some of these are:

(a) Seeding method, variety, timeliness, depth, and rate.
(b) Fertilization timing and rates.
(c) Row spacing.
(d) Cultivation timing and depth.
(e) Chemical application (rates, methods, timeliness, label restrictions, etc.).
(f) Seed treatment and germination potential (not use of old or damaged seed).
(g) Irrigation rates, number of times IRR, and time of irrigation for the soil type, crop, climatic conditions, and irrigation equipment.

1222 Claims for Indemnity Involving Suspected Concealment or Misrepresentation

If concealment or misrepresentation is suspected, do the following:

(1) If the inspection is a result of the insured's NOL, make all field verifications and/or determinations necessary to complete a final inspection, but advise the insured that further assistance will be needed before the claim can be finalized. Record information from the field inspection on appropriate appraisal forms, if applicable, and any other necessary worksheets needed to complete a final inspection. The information from the field inspection may be recorded on a PW or MPCI Non-Waiver Agreement, whichever the AIP prefers to use for this type of case. If a PW is used, the adjuster and the insured will not sign the PW at this time.

(2) Provide the insured a copy of any form signed by the insured and adjuster at this time (e.g., appraisal worksheets, MPCI Non-Waiver Agreement, etc.). Prior to signatures, review all data with the insured.

(3) If the inspection is a GSI or pre-harvest inspection, record the information as described in the paragraphs 731 and 732.

(4) The AIP will review all forms and documentation completed as a result of the field inspection and will provide any further assistance necessary for additional follow-up. After final evaluation of the case, the AIP will handle in accordance with the instructions in Appendix IV of the SRA for reporting suspected misrepresentation, fraud, waste, and abuse.

1223-1230 (Reserved)

1231 Third Party Cause of Loss

(1) The insurance contract does not cover loss from any cause which is due to neglect or wrongdoing of the insured, any member of the insured's household, tenants, sharecroppers, employees, nor uninsured damage caused by a third party.

(2) If part of a loss is due to actions of any person, inform the insured that any claim settlement made under this policy will be limited to the insured amount of damage and it is the insured's responsibility to file any claim for the uninsured portion against any third party.

Note: Until such a time the stage codes are updated in the individual LASHs, use the applicable stage code (TZ - UUF/Third Party Damage - Zero Production on Same Acreage, TA - UUF/Third Party Damage - Appraised Production on Same Acreage, TH - UUF/Third Party Damage - Harvested Production on Same Acreage) on the PW for third party COLs.

1232 Claims Involving Fire Damage

A. General Information

(1) Fire damage must be due to an insurable COL. To be an insurable cause, the fire must be due to a naturally occurring event.

(2) The insured must report and document the COL. The AIP must determine whether the loss is insurable. If the AIP determines the COL is insurable, damage due to the fire is covered.

(3) When the AIP verifies the insured's documentation of the fire, the AIP must verify that the documentation establishes the ignition source of the fire was due to a natural cause or natural disaster (refer to FAD-35, dated September 3, 2004 and FAD-60, dated November 1, 2006), and whether the fire damaged or destroyed the insured crop within the insurance period.

(4) Any damage resulting from fire when the insured cannot establish that the ignition source of the fire was due to a natural cause or natural disaster is uninsurable and follow the instructions for uninsured causes of damage.

(5) Tobacco Fire Damage in the Barn.

(a) Fire, flue or air-cured tobacco are recognized cultural practices used to cure tobacco.

(i) Fire cured tobacco is cured with the use of man-made controlled smoldering hardwood fires built on the barn floor. However, even with good management practices, an unavoidable naturally occurring insured peril (e.g., hurricane, tornado, or other abnormally excessive winds) can cause the smoldering fires to uncontrollably ignite unintended areas of the barn (e.g., timbers) that quickly spreads and damages or destroys the tobacco in the barn.

A. General Information (continued)

(ii) Flue cured tobacco is cured in a closed building with furnace driven heat directed from flues or pipes that extend from a furnace into the barn. Lightning is an example of a naturally occurring insured peril that could cause a barn fire that could result in fire damage to the tobacco. However, fire damage due to a malfunctioning furnace is not covered, unless the malfunction is directly due to an unavoidable naturally occurring event.

(iii) Air-cured tobacco is cured hanging from rafters in the barn with sides that open to allow air to freely circulate to cure the tobacco leaves. This curing process is the longest and most natural. However, for dark-air cured tobacco, when the air is very humid (i.e., during the night), producers may have to heat the barn with smokeless gas burners (pods) to avoid tobacco rot and to accelerate the curing process. Lightning or excessive winds are examples of naturally occurring insured perils that could cause a barn fire to unavoidably spread and damage or destroy the tobacco in the barn.

(b) Consistent with FAD-080, in the case of tobacco, (and specifically including fire cured tobacco) fire damage to the curing tobacco can be covered if the insured can establish, with verifiable documentation, that the fire igniting the curing tobacco was caused:

(i) By a naturally occurring unavoidable insured peril, and
(ii) In no way was due to negligence, mismanagement or wrongdoing by the insured or member of the insured's family or household, insured's tenants, or employees.

(c) Verifiable documentation includes, but is not limited to, the following:

(i) Local weather information collected by sources whose business it is to record and study the weather including but not limited to local weather reporting stations of the National Weather Service or documented local news reports, newspapers, television news reports, etc. that clearly establishes there was a hurricane, tornado, abnormally excessive winds, earthquake, or other naturally occurring insured peril in the area;

(ii) If applicable, a report from Property and Casualty Insurance Company who paid the fire claim on the barn stating there was no arson or malfeasance on the insured's part; and/or

(iii) Reports from the local fire department and/or law enforcement agency indicating the cause of the fire was due to a natural event.

A. General Information (continued)

(6) Wildfires that are not due to a naturally occurring event are not insurable. Therefore, wildfires started by arson, burning of trash, third parties, or undetermined causes are not insurable COLs. However, in accordance with FAD-080, "This does not mean that losses as a result of fires that started as arson, or other man-made causes can never be covered. It is possible that fire experts may be able to establish that an arson or other man-made fire can eventually become a natural disaster because naturally occurring events, such as excessive wind or drought conditions, may cause the fire to spread much farther than it would without such naturally occurring events. If the fire experts determine that at some geographical point, a fire started by arson can be considered a naturally occurring fire, then those losses in the area where the expert has determined the ignition source of the fire is considered naturally occurring would be covered. However, those losses in the area where the ignition source of the fire remains attributable to arson or other man-made causes cannot be covered." If the fire is a naturally occurring fire, insured crop acres required to be destroyed (e.g., plow to create fire break) by state or local authorities who's responsibility involves fighting fires to prevent the fire from spreading even further will be considered damaged due to insurable causes of loss. Attach to the PW verifiable documentation for insurable causes and, if applicable, uninsurable causes.

(7) When the AIP establishes to their satisfaction that the fire damage to the insured crop was from a naturally occurring event that took place within the insurance period, the adjuster must establish whether or not the insured has other fire insurance on the crop in the field, on the tobacco in the barn if tobacco is in the barn, and whether fire has been excluded from the CP.

(8) If the insured does not have other fire insurance, prepare a claim and state in the Narrative that there is no other insurance. The claim is worked on a unit basis. When only a portion of the unit acreage is destroyed by fire and the harvested/appraised production exceeds the unit guarantee, all of the following instructions may be disregarded.

(9) If there is other fire insurance and hail and fire coverage has been excluded from the policy, follow the instructions given in paragraph 405.

B. Other Fire Insurance and MPCI Fire Coverage (Double-Fire Coverage)

(1) If the insured has other fire insurance and MPCI fire coverage, the AIP will be liable only for loss due to fire for the smaller of the amount:

(a) of indemnity computed, or
(b) by which the loss from fire exceeds the indemnity paid or payable under the other insurance. The amount of loss from fire is the difference between the total value of the production of the insured crop on the unit involved before and after the fire.

B. Other Fire Insurance and MPCI Fire Coverage (Double-Fire Coverage) (continued)

(2) Determining Total Value Per Acre Before and After the Loss

(a) For crops for which RP is not available and if the insured has an:

(i) Approved yield, the total value of the crop:

(A) Before the loss is the insured's approved yield times the highest price election for the crop; and

(B) After the loss is the insured's PTC times the highest price election for the crop; or

(ii) Amount of insurance, the total value of the crop

(A) Before the loss is the highest amount of insurance available for the crop; and

(B) After the loss is the insured's PTC times the price contained in the CP for valuing PTC.

(b) For crops for which RP is available and the insured elects:

(i) YP, the total value for the crop:

(A) Before the loss is the insured's approved yield times the applicable projected price (at the one hundred percent (100%) price level) for the crop; and

(B) After the loss is the insured's PTC times the applicable projected price (at the one hundred percent (100%) price level) for the crop.

(ii) RP, the total value for the crop:

(A) Before the loss is the insured's approved yield times the higher of the applicable projected price or harvest price for the crop (If the insured has elected the harvest price exclusion, the applicable projected price for the crop will be used); and

(B) After the loss is the insured's PTC times the harvest price for the crop.

(3) Prepare documentation on a Special Report in the following manner:

(a) Name and address of other insurance company and the name of their adjuster.
(b) The other insurance policy number.

B. Other Fire Insurance and MPCI Fire Coverage (Double-Fire Coverage) (continued)

(c) The applicant's issue date and the termination date of the other policy.
(d) Whether the loss was total or partial (all or part of the unit).
(e) Divide the determined acreage for the unit by the total acreage for all units involved and round the resulting factor to three decimal places.

(i) Multiply the amount of fire coverage by this factor.
(ii) Use the result obtained as the amount of fire coverage applicable to the unit.

(f) The amount of indemnity paid or payable to the insured by the other insurer with respect to:

(i) the entire loss, and
(ii) that part of the loss applicable to the unit in question.

(g) The quantity of the crop expressed in bushels, tons, pounds, etc., from the unit damaged or destroyed by fire include:

(i) The total value per unit of measure (e.g., pounds, bushel, etc.) and the total value on the date of the fire before fire damage.

(ii) The total value per unit of measure (e.g., pounds, bushel, etc.) (if any) on the date of the fire after fire damage from the "Value" column in the harvested production portion of the PW.

(h) If the crop from two or more units was damaged or destroyed by the same fire, show the total unit of measure (e.g., pounds, bushel, etc.) and total value and the bushels and total value applicable to the unit for which the loss is being adjusted.

(i) Indicate if an agreement with the other insurance adjuster has been reached as to the quantity and value per unit of production destroyed. If there is disagreement, explain what caused the difference and how the quantity and value of the crop destroyed were determined.

(j) A statement of all known facts as to how the fire originated including location of the field(s), and if the fire resulted from the act of any person, the name and address of such person, and the name and address of person(s) having knowledge of the origin of the fire.

Note: Until such a time the stage codes are updated in the individual LASHs, use the applicable stage code (TZ -UUF/Third Party Damage – Zero Production on Same Acreage, TA -UUF/Third Party Damage – Appraised Production on Same Acreage, TH -UUF/Third Party Damage – Harvested Production on Same Acreage) on the PW for unavoidable uninsured fire COLs.

1233 Commingled Production

This procedure applies to commingled production in storage structures or conveyances used to transport the harvest production. It also applies to sold production shown on settlement sheets that has not been or cannot be separated by unit.

Production from the landlord's and tenant's share of the crop unit that is stored in the same structure is not considered commingled production. Refer to subparagraph 902C.

The insured is required to maintain production evidence to support the current crop year's unit arrangement as shown on the AR. If at loss time the production is discovered to be commingled, then the production must be apportioned, depending on unit structure (or arrangement), according to the rules given below. The apportioned production is used to process both the current year's claim and the following crop year's APH production reports.

A. Different Types of Commingled Production

(1) Harvested production from insured acreage commingled with harvested production from uninsured acreage;

(2) Harvested production from more than one crop year is commingled;

(3) Harvested production from acreage of a reported unit and from acreage of an unreported unit is commingled;

(4) Harvested production from two or more OUs are commingled;

(5) Harvested production from BUs and/or from different policies/counties are commingled;

(6) Harvested production from different practices/types, or having separate coverage levels with separate APH yields within a unit is commingled;

(7) Harvested production from two or more units with separate coverage levels for IRR and NIRR practices are commingled;

(8) Harvested production from an EP or MCEU with an IRR practice is commingled with an EP or MCEU with a NIRR practice; or

(9) Harvested production from an EU or MCEU with an IRR/NIRR practice is commingled with a BU/OU with a NIRR/IRR practice.

B. Separated Commingled Production

If the AIP is satisfied the insured has complied with paragraph 1003 instructions for the method selected by the insured to separate commingled production stored within the same storage structure or within the same truck load or other conveyance, the following procedures do not apply.

C. Unsatisfactory Records or No Records

This procedure does not apply when there are unacceptable records of multiple entities that have stored their production in the same storage structure with one or more uninsured entities. In this instance, there is no way of applying the following procedures since uninsured producers do not have liability. Therefore, because there were no acceptable records to separate the production, the insureds failed to prove their losses and the indemnities on these units must be denied.

Satisfactory records include weighed production as detailed in paragraph 1002 and records of each weighed load of production sold or commercially stored, identified by unit. When the insured does not have satisfactory records separating commingled production, handle as instructed below:

(1) When there is commingled production from insured and uninsured acreage, prepare the claim to show all production as being from the insured acreage. In the Narrative section, explain that the reported production is commingled production from insured and uninsured acreage.

(2) When there is commingled production from current and prior crop year, prepare the claim to show all production as being from the current crop year acreage. In the Narrative section of the claim explain that the reported production is commingled from current crop year and prior crop year production.

(3) When there is commingled production from acreage of reported and unreported units, if it is determined that the unreported units and the reported units were OUs, then allocate the amount of production from the commingled reported units and unreported units in accordance with (5) below.

Once the amount of production for the unreported units has been determined, follow the procedures for allocating the harvested allocated production from the unreported units to the reported units, as stated in paragraph 1234 below.

(4) When there is commingled production from two or more OUs, if production from two or more separate OUs is commingled, such commingling renders any such unit determination void for the current and succeeding crop year (refer to the CIH). The approved APH yields for each commingled unit are retained for the current crop year and succeeding crop year but will be processed on the AR and PW under the same unit. Any remaining OUs that were not commingled will retain their OU structure.

(a) Determine which OUs were commingled. If there were other OUs that were not commingled, combine only the commingled OUs into one OU. If all OUs were commingled, combine all OUs into applicable BU structure(s).

C. Unsatisfactory Records or No Records (continued)

(b) The PW will be prepared with separate lines representing the guarantees, approved yields, and PTC for each of the units commingled. The total commingled production will be allocated to each OU in proportion to the liability (do not include share) for the harvested insured acreage of the commingled units.

(c) The CIH outlines the eligibility of commingled OUs for the next crop year.

(d) The revised APH form and revised AR must be approved or rejected by the AIP's approving official for these forms.

(5) If at loss time, production is discovered to be commingled between BUs (including high-risk land excluded from additional coverage and insured under a CAT policy or HR-ACE endorsement) the production must be allocated in proportion to the liability for the harvested acreage from the commingled BUs to the appropriate BUs. Prepare separate PWs for each BU that has been commingled. This may involve more than one policy; e.g., BUs from two different policies (policy for each county or policy for the landlord and tenant). Liability is hereafter called dollar coverage or coverage.

(a) Use the following formula to allocate production to each commingled BU in proportion to the dollar liability for the harvested insured acreage:

(i) For each BU, multiply the per-acre dollar coverage for the insured acreage x the number of harvested acres = unit dollar coverage for harvested acres. Refer to (b) below for dollar coverage calculation instructions.

(ii) Total the unit's coverage for only harvested acreage from all commingled units to obtain the total commingled unit coverage (coverage for only harvested acres from all commingled units).

(iii) Divide the unit's coverage for only the harvested acres by the total commingled unit coverage for only the harvested acres from all commingled units to obtain the CPF (four-place factor).

(iv) For each commingled unit: multiply the total harvested production (insured's and shareholder's share) from all commingled units times the CPF to obtain the apportioned production for each commingled BU.

C. Unsatisfactory Records or No Records (continued)

(b) Determine Per-acre Dollar Coverage, as follows:

(i) For APH crops with insurance plan codes 01 and 90: Alfalfa seed, almonds, FL avocados, barley, buckwheat, canola, corn, AUP and ELS cotton, cranberries, cultivated wild rice, dry beans, dry peas, flax, forage production, grain sorghum, Hawaii Tropical Fruit (bananas, coffee, papaya), millet, mint, mustard, oats, olives, peaches, peanuts, pistachios, popcorn, potatoes, rice, rye, safflowers, soybeans, sugar beets, sugarcane, sunflowers, processing sweet corn, tobacco (all crop codes), FM tomatoes, canning & processing tomatoes, and wheat:

(A) Approved APH yield X insured's coverage level (if certified seed potatoes with one hundred twenty-five percent (125%) acreage limitation or with the 110T acreage limitation take the preceding result X yield conversion factor.) = per-acre guarantee.

(B) Per-acre guarantee (X guarantee reduction factor, if acreage late planted) X price election (projected price if applicable) = per-acre coverage.

(ii) For APH crops with insurance plan code 90: blueberries, cabbage, AZ citrus fruit, all CA citrus crops (except navel oranges), TX citrus fruit, dry beans, dry peas, figs, grapes, green peas, macadamia nuts, onions, pears, plums, potatoes, processing beans, prunes, stonefruit, table grapes, and walnuts:

(A) Approved yield X insured's coverage level X option historical packout factor (X guarantee reduction factor, if acreage late planted) = per-acre guarantee (all listed crops except cabbage and potatoes (certified seed).

(B) For cabbage (except processing) and potatoes (certified seed) with the one hundred twenty-five percent (125%) acreage limitations: approved APH yield X insured's coverage level X yield conversion factor = per-acre guarantee.

(C) Per-acre guarantee X insured's price election = per-acre coverage.

(iii) For crops with dollar plan of insurance (plan code 50): Florida citrus, forage seeding, peppers, raisins, fresh market sweet corn, and fresh market tomatoes:

(A) The reference maximum amount from the AD X the insured's coverage level (X the insured's elected price election factor for Florida Citrus only) = the per-acre DO.

C. Unsatisfactory Records or No Records (continued)

(B) Per-acre DO X price election = per-acre coverage.

(iv) For crops with fixed DO (insurance plan code 51): chile peppers:

(A) AD dollar amount X guarantee reduction factor = per-acre DO

(B) Per-acre DO = per-acre coverage.

(v) For crops with DO (insurance plan code 46): California avocados:

(A) Insured approved average revenue X insured's coverage level = per-acre DO.

(B) Per-acre DO = per-acre coverage.

(vi) For crops with DO (insurance plan code 41): pecans:

(A) Approved average revenue per acre X insured's elected coverage level = per-acre DO.

(B) Per-acre DO = per-acre coverage.

(vii) For crops with yield base DO (insurance plan code 55): hybrid seed corn and hybrid seed sorghum:

(A) County t-yield from Actuarial Information Browser X insured coverage level – minimum payment (in bushels) = yield.

(B) Yield X insured's elected price election (if late planted, x guarantee reduction factor due to LP) = dollar per-acre guarantee.

(C) Dollar per-acre guarantee = per-acre coverage.

(viii) For crops with ARPI (insurance plan code 04, 05, and 06)

(A) Must be greater than or equal to (≥) sixty percent (60%) of the maximum protection per acre and less than or equal to (≤) one hundred percent (100%) of the maximum protection per acre = dollar per-acre guarantee.

(B) Dollar per-acre guarantee = per-acre coverage.

C. Unsatisfactory Records or No Records (continued)

(ix) For crops with actual revenue history (insurance plan code 47): citrus (navel oranges), cherries, and strawberries:

The approved revenue X expected revenue factor = value per acre X coverage level X the payment factor = amount of insurance per acre (guarantee).

(x) For APH crops with RP (insurance plan code 02): barley, canola/rapeseed, corn, cotton, grain sorghum, rice, soybeans, sunflowers, and wheat:

(A) Approved APH yield X insured's coverage level (X guarantee reduction factor if acreage late planted) = per-acre guarantee.

(B) Per-acre guarantee X higher of insured's projected price or harvest price) = per-acre coverage

(xi) For APH crops with RP (insurance plan code 03): barley, canola/rapeseed, corn, cotton, grain sorghum, rice, soybeans, sunflowers, and wheat:

(A) Approved APH yield X insured's coverage level (X guarantee reduction factor if acreage late planted) = per-acre guarantee.

(B) Per-acre guarantee X insured's projected price = per-acre coverage

Example of commingled production from three BUs from different policies:

Step 1: Unit 0001-0001BU: 10.0 harvested acres X 69.0 bu. (harvest guarantee) X $2.00 (PE) = $1380 (line coverage)

15.0 harvested acres X 78.0 (harvest guarantee) X $2.00 (PE) = $2340 (line coverage)

$1380 (line coverage) + $2340 (line coverage) = $3720 (unit coverage for only the harvested acres in the unit)

Unit 0001-0002BU: 20.0 acres harvested X 104.0 bu. (harvest guarantee) X $2.00 (PE) = $4160 (unit coverage for only the harvested acres in the unit)

Unit 0001-0003BU: 25.0 harvested acres X 96.0 bu. (harvest guarantee) = x $2.00 (PE) = $4800 (unit coverage for only the harvested acres in the unit)

C. Unsatisfactory Records or No Records (continued)

Step 2: $3720 (0001-0001BU unit coverage) + $4160 (0001-0002BU unit coverage) + $4800 (0001-0003 BU unit coverage) = $12,680 (total commingled unit coverage for only the harvested acres from all commingled units.)

Step 3: Unit 0001-0001BU: $3720 (unit coverage for only the harvested acres in the unit) ÷ $12,680 (total commingled unit coverage for only the harvested acres from all commingled units) = .2934 (CPF)

Unit 0001-0002BU: $4160 (unit coverage for only the harvested acres in the unit) ÷ $12,680 (total commingled unit coverage for only the harvested acres from all commingled units) = .3281 (CPF)

Unit 0001-0003BU: $4800 (unit coverage for only the harvested acres in the unit) ÷ $12,680 (total commingled unit coverage for only the harvested acres from all commingled units) = .3785 (CPF)

Step 4: Unit 0001-0001BU: 5000.0 bu. (total of only harvested prod. from all commingled units) X .2934 (CPF) = 1467.0 bu. to be allocated to unit 0001-0001BU.

Unit 0001-0002BU: 5000.0 bu. (total of only harvested prod. from all commingled units) X .3281 (CPF) = 1640.5 bu. to be allocated to unit 0001-0002BU.

Unit 0001-0003BU: 5000.0 bu. (total of only harvested prod. from all commingled units) X .3785 (CPF) = 1892.5 bu. to be allocated to unit 0001-0003BU.

(c) Completing the PW for BUs that are commingled:

(i) Enter “Commingled Production” in the heading.

(ii) Prepare Parts I and II in the usual manner, except for farm-stored production; enter the allocated gross production for the unit in the column for gross production.

(iii) Enter the following in the Narrative of each commingled unit claim or on a Special Report attached to the PW:

(A) Total the harvested production from all commingled BUs and the calculations used to arrive at the allocated production for each commingled unit.

(B) Explain the reasons given by the insured for commingled production.

C. Unsatisfactory Records or No Records (continued)

(6) Commingled production from different practices/types/coverage levels having separate APH yields within a unit: Prorate commingled production which cannot be separated with satisfactory records to each P/T in proportion to the liability on the harvested acreage for each P/T. Separate line entries are required on the PW in the harvest production part of the claim. See applicable crop LASH. Refer to example below for formula to prorate production in proportion to the unit liability.

(a) **Example**: Unit 0001-0001BU having practices with different APHs

Step 1: Line 1: 10 acres of harvested production (003 NIRR practice) X 45.0 bu. (harvest guar.) = 450.0 bu. (line guarantee (line guar.))

Line 2: 15.0 acres of harvested production (002 IRR practice) X 80.0 bu. (harvest guarantee) = 1,200.0 bu. (line guar.)

Step 2: 450.0 bu. (line 1 guar.) + 1200.0 bu. (line 2 guar.) = 1650.0 bu. unit guarantee (U guar. for the harvested production from more than one practice having different APHs commingled for the unit)

Step 3: 450.0 bu. (line 1 guar.) ÷1650.0 bu. (U guar. for the harvested production from more than one practice having different APHs commingled for the unit) = .2727 CPF.

1200.0 bu. (line 2 guar.) ÷ 1650.0 bu. (U guar. for the harvested production from more than one practice having different APHs commingled for the unit) = .7273 CPF.

Step 4: 1500.0 bu. (total the harvested production for practices commingled) X .2727 (line 1 CPF) = 409.0 harvested bu. to be allocated for line 1 (003 NIRR practice).

1500.0 (total harvested prod.) X .7273 (line 2 CPF) = 1091.0 harvested bu. to be allocated for line 2 (002 IRR practice).

(b) Completing the PW:

(i) Enter "Commingled Production" in the heading.

(ii) Prepare Parts I and II in the usual manner, except for farm-stored production; enter the allocated gross production for each practices/types/coverage levels on separate lines in Part II of the PW as instructed in the individual crop LASH.

(iii) Enter the following in the Narrative of each commingled unit claim or on a Special Report attached to the PW:

C. Unsatisfactory Records or No Records (continued)

(A) Total the harvested production from all commingled practices/types/coverage levels and the calculations used to arrive at the allocated production for each commingled unit.

(B) Explain the reasons given by the insured for the commingling of production.

(7) If production from an IRR EP or MCEU is commingled with production with a NIRR EP or MCEU, such commingling renders any such unit determination void for the current crop year only. The total commingled production will be allocated to each IRR and NIRR practice in proportion to the liability (do not include share) for the harvested insured acreage of the commingled units. The APH databases for each commingled EP are retained, but will be processed on the revised AR and PW under the same EU. When commingling occurs, the descriptor on the revised AR will be revised from EP or MCEU back to EU (or to unit structure that the insured qualifies for).

(i) The PW will be prepared with separate lines representing the applicable practices, guarantees, approved yields, and PTC for the commingled EPs.

(ii) The revised AR must be approved by the AIP's approving official.

(iii) The CIH outlines the eligibility of commingled EPs for the next crop year.

(iv) The revised APH form and revised AR must be approved by the AIP's approving official.

(8) If production from an EU or MCEU with an IRR/NIRR practice is commingled with production with a BU/OU with a NIRR/IRR practice, such commingling renders any such unit determination void for the current crop year only. The total commingled production will be allocated to each IRR and NIRR practice in proportion to the liability (do not include share) for the harvested insured acreage of the commingled units. The APH databases for each commingled EU, BU, or OU are retained, but will be processed on the revised AR and PW under the same EU, BU, or OU. When commingling occurs, the descriptor on the revised AR will be revised to the unit structure that the insured qualifies for.

(i) The PW will be prepared with separate lines representing the applicable practices, guarantees, approved yields, and PTC for the commingled EUs, BUs, or OUs.

(ii) The revised AR must be approved by the AIP's approving official.

(iii) The CIH outlines the eligibility of commingled EUs, BUs, or OUs for the next crop year.

(iv) The revised APH form and revised AR must be approved by the AIP's approving official.

(1) If the insured fails to report all units (acreage that could have been established as a separate unit), the insured's share of production from the acreage in the unreported unit will be allocated to the acreage in the reported unit(s) in proportion to the liability (do not include share) on the insured acreage on each reported unit.

(2) If an insured reports zero acres for a unit and it is determined that there are insurable acres, it will be considered to be an unreported unit. If an insured reports uninsured acreage on the AR that is determined to have been a unit of insurable acreage, the unreported unit procedure will apply.

(3) No production from unreported units will be allocated to PP acreage or otherwise affect any PP payment. The calculation examples in (8) below show how the production is proportioned to the liability. No premium will be charged for the acreage on the unreported unit (s).

(4) Production from the unreported unit(s) is allocated to reported units of the same crop in the same county, unless the "county" definition in the policy/endorsement or a WA specifies otherwise.

(5) Production from the unreported unit(s) can only be established from harvested and/or appraised production. If no production has been harvested and/or appraised from an unreported insurable unit and this unit is destroyed prior to the adjuster's knowledge of its existence, potential production cannot be assessed for this unreported unit. At the time an unreported unit is discovered, appraise unreported unit acreage any time it is suspected or known that the crop will not be harvested or production will be harvested and stored in such a manner that the production cannot be established at a later date. The appraised production from the unreported unit will be allocated to the reported unit(s).

(6) Advise the insured that production from the unreported unit will not be counted for APH purposes for the reported unit even though it will be apportioned to it; however, the unreported unit production will be counted for APH purposes for the unreported unit.

(7) Claims cannot be finalized until the production (preferably harvested rather than appraised) from unreported units is established for allocation.

(8) Calculate the production from the unreported acreage unit, as follows:

(a) If there is an unreported unit of an insurable type that has a different unit of measure (harvested with that unit of measure) than the reported unit, convert the harvested production from the unreported unit to the unit of measure of the reported unit types.

Example: There is an unreported unit of corn silage type (harvested silage production) and reported units of corn grain type (both types insurable in the county). In this case, follow the calculation instructions in the CIH for converting harvested corn silage production unit of measure (tons) to corn grain unit of measure (bushels).

(b) If only one unit is reported, the insured's share of the gross production adjusted for all applicable adjustments; e.g., moisture, test weight (if farm-stored), FM, and quality if applicable (net production) from the unreported unit divided by the insured's share of the reported unit will be the amount allocated to the reported unit.

Example: An unreported unit consisting of 50 acres with 1500.0 bu. of harvested production was found when completing a final loss inspection. It was determined that the insured had a fifty percent (50%) share in the unreported unit. The insured's share in the reported unit was seventy-five percent (75%).

Step 1: 1500.0 bu. X .500 = 750.0 bu. share of unreported unit.
Step 2: 750.0 bu. (insured's production share of unreported unit) ÷ .750 (share percent of reported unit) = 1000.0 bu. to be allocated to the reported unit.

Although the allocated production to the reported unit was increased in this example, it will be reduced to the correct share of production (750.0 bu.) when the indemnity amount is multiplied by the reported unit share (.750).

(c) If more than one unit was reported, calculate the allocation of production from the unreported unit to each reported unit in proportion to the liability on the insured acreage as follows (liability as stated in A(1) above is called coverage):

(i) For each reported unit, calculate the coverage for the insured acreage (insured acres x per-acre guarantee x price (P) = unit coverage.). Price is the applicable harvest price, projected price for RP plan, insured's elected percentage of projected price for YP plan, insured's elected percentage of amount of insurance or price election, or price adjusted when the CP specify a reduced price for UH production.

(ii) Total the unit coverage for the insured acreage on all reported units to obtain the contract coverage.

(iii) Divide the unit coverage by the contract coverage to obtain the unit coverage factor (four-place factor).

(iv) Multiply the insured's share of unreported unit (s) production (appraised and harvested) by the unit coverage factor and divide the result by the share on the reported unit to obtain the apportioned unreported production for each reported unit.

Example: Unreported acreage of 200.0 acres of wheat with 6,000.0 bu. of harvested production was found when completing a final loss inspection. It was determined that the insured had a fifty percent (50%) share in this acreage with the harvest price. The insured's share of production to be allocated would be 3,000.0 bu. Unit 0001-0001OU had 140.0 insured acres; unit 0001-0002OU had 100.0 insured acres; and unit 0001-0003OU had 200.0 insured acres.

Step 1: Unit 0001-0001OU: 140.0 acres x 30.4 bu. guarantee x $2.00 harvest price = $8,512 unit coverage for unit 0001-0001OU

Unit 0001-0002OU: 100.0 acres x 22.2 bu. guarantee x $2.00 harvest price = $4,440 unit coverage for unit 0001-0002OU

Unit 0001-0003OU: 200.0 acres x 24.8 bu. guarantee x $2.00 harvest price = $9,920 unit coverage for unit 0001-0003OU

Step 2:

Unit 0001-0001OU coverage	$8,512
Unit 0001-0002OU coverage	$4,440
Unit 0001-0003OU coverage +	$9,920
Contract coverage	$22,872

Step 3: $8,512 ÷ $22,872 = .3722 unit 0001-0001OU coverage factor
$4,440 ÷ $22,872 = .1941 unit 0001-0002OU coverage factor
$9,920 ÷ $22,872 = .4337 unit 0001-0003OU coverage factor

Step 4: 3000.0 bu. = insured's share from the unreported unit (6000.0 x .500 = 3000.0)

3000.0 bu. x .3722 = 1116.6 ÷ 1.000 = 1116.6 bu. to be allocated to unit 0001-0001OU

3000.0 bu. x .1941 = 582.3 ÷ 1.000 = 582.3 bu. to be allocated to unit 0001-0002OU

3000.0 bu. x .4337 = 1301.1 ÷ .500 = 2602.2 bu. to be allocated to unit 0001-0003OU

The allocated production for unit 0001-0003OU was increased to 2602.2 because it will be reduced to the correct share of production (1301.1) when the indemnity amount is multiplied by the reported unit share (.500).

(9) For claims having a harvested (H) stage and/or destroyed without consent (P) stage, enter the apportioned net production on a separate line in the "Bu. Lbs. Cwt. or Tons" column. Identify this line as such by entering the words "Unreported Unit Production" in the "Length" and "Width, Depth, and Deduction" columns. If production is stored on the farm, enter net production in the "Bu. Lbs. Cwt. or Tons" column. Refer to (11) below for documentation requirements.

(10) For claims having only an UH stage, in the "Uninsured Causes" column, using only one line, enter a per-acre amount of production (total allocated production ÷ number of acres for the line) that will equal the total allocated production or come as close as possible to the total allocated production without exceeding it when the per-acre amount is multiplied by the acres on that line. If possible, choose a line that does not have an actual uninsured cause appraisal in the "Uninsured Causes" column. However, if you must use a line that will have an actual uninsured cause appraisal in the "Uninsured Causes" column, add the per-acre amount of net production calculated for the allocated production to the uninsured cause appraisal.

Example: On the PW, the line selected to make the entry in the "Uninsured Causes" column showed 50.3 acres in the "Final Acres" column. 743.7 (total allocated production) ÷ 50.3 acres = 14.785 bu. This would be entered as 14.7 in the "Uninsured Causes" column) rather than 14.8 since 14.8 bu. x 50.3 acres = 744.4 bu., which would exceed 743.7 bu. (the total allocated production).

(11) Enter the allocated net production in item 71 of the PW as instructed in the PW entries and completion procedures for the applicable crop LASH.

(12) Document the following in the Narrative of the PW or on a Special Report: (If a Special Report is used, attach a copy to each claim.)

(a) For actual production from the reported and unreported units, identify the location of the unreported unit by legal description and field I.D. number;

(b) The calculations used to arrive at the production allocated to the reported unit(s); and

(c) If the "Uninsured Causes" column has been used for the unreported-unit production, identify which line was used; e.g., line 2. Also, if any actual uninsured cause appraisal has been included with the allocated production in the "Uninsured Causes" column, separately identify the amount of each.

1235 Claims Involving Severe Wildlife Damage, Insect, Disease, or Weed Infestation

(1) The first crop year damage resulting from severe, insect, disease, weed infestations, or
*** wildlife damage (only when wildlife is included as an insurable COL in the CP) will generally be considered unavoidable if the insured was unaware of the conditions at planting time. However, if:

(a) It is determined that the insured was (or should have been) aware of the wildlife presence, insect, disease, or weed infestation at planting time or later but did not follow appropriate recognized GFPs (e.g., crop rotation or soil treatment practices), or recognized wildlife control measures that could be effectively used on agricultural acreages, some or all of the loss will be considered an avoidable (uninsured) COL.

(b) A disease resistant variety exists for a disease that agriculture experts in the local area are recommending be planted, and the insured does not plant such a variety, the disease is considered to be an avoidable COL, even in the first year.

(2) Disease is not an insured COL, even when the first crop year damage is considered unavoidable, if the sole loss of production is due to a Federal or State quarantine that requires destruction of the diseased crop, unless otherwise stated in the CP or SP. Refer to subparagraph 1221H(1).

(3) Advise the insured that some or all of the damage due to the same cause in subsequent years on the same acreage will be considered avoidable (uninsured) unless recognized GFPs or recognized wildlife control measures have been followed. Suggest that the insured contact the local county extension office to obtain their recommendations for treating and eradicating the infestation, or the state conservation department to determine if there are any recommended control measures for the wildlife on agricultural crop acreage.

(4) Record the details of the case and identify the cause and name of weed, disease, or other pest and list the control measure(s) taken, in the Narrative section of the PW or on a Special Report.

(5) Identify the infested field(s) on an aerial photomap and the PW or on a Special Report.

(6) Appraise and record loss of production from avoidable causes according to applicable procedure. Refer to paragraph 1221.

1236 Airplane or Broadcast-seeded Barley, Oats, Rye, or Wheat

(1) Insurance generally attaches at the time of seeding. The BP provide that the contract will not cover any loss of production due to failure to follow recognized GFPs. This subparagraph is not applicable to an air seeder implement that applies the seed to the soil surface and incorporates it into rows in a single operation. Application of seed with an air seeder implement is considered planted and insurance would attach at that time.

(2) Some SPs for small grain crops state the following: Any fall planted acreage on which seed is spread onto the soil surface by any method (e.g., airplane or otherwise broadcast seeded) and is subsequently mechanically incorporated into the soil, will be insurable only if the insured requests an inspection for the acreage within 72 hours after the FPD or within 72 hours after the insured completed incorporating the seed in the LPP, and the AIP agrees in writing that the acreage has an adequate stand to produce the yield used to determine the insured's production guarantee. No coverage will be provided if an adequate stand is not established within 30 days after the end of the LPP or within 30 days after the FPD if no LPP is applicable. Insurance will attach to such acreage with adequate stand on the date the AIP inspects the acreage.

(3) Mechanical incorporation is required unless excepted by the county AD. Item (6) below provides instructions for when the insured is prevented from mechanically incorporating the seed due to an insured COL.

(4) All other insurability provisions of the contract must be met.

(5) Failure to properly prepare the seed bed will be considered failure to follow recognized GFPs, and when it results in a loss of potential production, it will necessitate an appraisal for uninsured causes on any subsequent claim.

(6) If the insured did not mechanically incorporate (and lack of incorporation was not due to an insured COL) the barley, canola, oats, rye, or wheat seed into the soil and mechanical incorporation is not excepted in the county AD, show such acreage in the "Remarks" section of the AR as uninsured. If the original AR showed such acreage as insurable acreage, prepare a revised AR to delete such acreage. Refer to paragraph 523(3) if incorporation is not possible due to an insured COL.

1237 Severe Wind Erosion

(1) In some geographical areas, emergency tillage to control wind erosion in order to conserve the soil and minimize further damage to planted crops is a recognized GFP. Such emergency tillage usually begins in strips, but under extreme conditions may progress to the point of solid tillage. Implements used for this purpose vary, although a chisel plow is preferred in many areas. In geographical areas where emergency tillage is a recognized GFP to control severe wind erosion, appraisals are not to be charged as PTC for acreage insureds have tilled to control severe soil erosion when the AIP can document that such tillage was necessary.

(2) This procedure applies to the actual acreage of the crop being physically destroyed by the tillage process; i.e., this would not apply to acreage between tilled rows.

(3) Apply the following procedures when the crop is to be tilled to control severe wind erosion.

(4) Crops with policy or endorsement provisions for replanting payments will be subject to their particular rules and regulations, including the requirement that the AIP must have the opportunity to inspect the acreage prior to destruction to determine eligibility for a replanting payment. Representative areas of the crop are to remain intact for appraisal purposes to verify the eligibility of the acreage for a replanting payment. This requirement can be waived by the AIP only under extremely unusual conditions that necessitate solid-tilling prior to appraisal opportunity. Also refer to part 7, section 2 for additional replanting information.

(5) In all cases, insureds are to notify their AIP immediately of their intention to till acreage for the purpose of controlling soil erosion. If the urgency to till is such that AIP notification is impossible prior to such action, the efforts of the insured to provide immediate notification of the tillage undertaken will be considered in determining the insured's compliance with this requirement.

(a) Twenty-Five percent (25%) or less. If the insured intends to till twenty-five percent (25%) or less of the field or subfield, (accumulative rather than single event) the insured can immediately begin tilling upon notifying the agent of such intentions.

(b) More than twenty-five percent (25%). If the insured intends to till more than twenty-five percent (25%) of a field or subfield, or finds that after tilling is started, more than twenty-five percent (25%) of a field or subfield needs to be tilled, the AIP must be notified immediately so that such acreage can be inspected prior to tilling. The AIP may waive this requirement for inspection prior to tilling only under extremely unusual conditions that necessitate tilling prior to inspection opportunity; however, the AIP will make every attempt to give such cases priority attention to inspect the field(s) prior to solid tillage completion.

(6) Documentation of inspections:

(a) Upon the receipt of notices involving tillage of more than twenty-five percent (25%) of the acreage in a field or subfield, adjusters are to make on-the-farm inspections as soon as possible. The AIP has the authority to expand this inspection requirement to include notices under twenty-five percent (25%) or to include all notices; i.e., one hundred percent (100%) of notices inspected. For each inspection, document on a Special Report, the following:

(i) The need for emergency tillage (to the extent tilled).

(ii) The amount and percent of acreage actually tilled or to be actually tilled in each field or subfield.

(iii) Whether the crop was ever initially planted.

(iv) Any uninsured causes.

(v) A statement of the crop stand and condition (prior to tillage) as good, fair, poor, very poor, or destroyed.

(vi) General weather and moisture conditions.

(vii) Variability of crop within the subfield, field, and unit.

(viii) Other pertinent information needed to make future determination of any loss.

(b) If you have any reason to doubt the need for emergency tillage to the extent tilled (or to be tilled), then:

(i) Prepare a crop appraisal; and
(ii) Support your documentation with recommendations from agricultural experts. Refer to the GSH for the definition of agricultural experts.

1238 Corrected Claims

(1) Once a claim is processed, the claim cannot be corrected unless:

(a) One or more entries on the PW is incorrect due to:

(i) an incorrect factor;

(ii) an incorrect appraisal amount due to an error in calculating the appraisal on the appraisal worksheet (e.g., an incorrect factor was used or error in calculation);

(iii) an incorrect measurement of a storage structure that can be verified to be incorrect;

(iv) the insured failing to report all of the production from the unit;

(v) all of stated production is not accounted for; under the provisions of the MI, current and/or prior year's claims would have to be corrected, etc.; or

(vi) the insured received multiple USDA benefits for the same acres and has chosen to repay the AIP.

(b) Entries of information that affect the indemnity were erroneously omitted (e.g., excess moisture percentage).

(c) A decision from an arbitration, appeal, or administrative review requires a corrected claim.

(d) A decision from a reconciliation review that the RMA is incorrect and the FSA data is correct. The $250 tolerance described in (4) below is not applicable.

(e) Part or all of the claim is settled on appraised production and the insured later harvests the appraised production; or part or all of the production on the acreage is harvested using normal harvesting methods/equipment and the insured later harvests additional production from the same acreage using specialized harvesting methods/equipment. Depending on the circumstances, the claim may or may not be corrected. Refer to subparagraph 702A(12) for details;

(f) The individual crop LASH specifies a corrected claim may be done for a specific situation;

(g) The value received for damaged production has been increased after the claim was settled (e.g., after claim was settled, the buyer decreased the discounts for the damaged production and reimbursed the insured producers the difference) and this would result in an overpayment of at least $250 for the policyholder's indemnity as described in (4) below; or

(h) A BU structure is determined to be incorrect.

(2) Corrected claims cannot be made solely because the insured subsequently sells more or less production;

(a) than was determined from measurements of production in a storage structure(s) at the time of final settlement of the claim, unless the dimensions of the structure or obstacle deductions (studs, vents, etc.) or other details or circumstances can be verified to be in error.

(b) than was determined from PFTS at the time of final settlement of the claim, unless the manufacturer provides written documentation that the combine yield monitor and/or PFTS software has malfunctioned. This written documentation identifies when and how the malfunction occurred.

(3) Reprocessing claim information along with the proper codes to reduce or restore an indemnity or PP payment due to first and second crop acreage is not considered a corrected claim for the purpose of this paragraph. This type of administrative action does not require a PW to be completed. However, the claim information is processed through PASS with the proper codes to reduce or restore the indemnity or PP payment, as applicable. Documentation of why the indemnity or PP payment was required must be kept in the insured's loss file.

(4) Prepare a corrected claim only when you are authorized by your AIP to do so, and in accordance with the following tolerances below. For types of corrected claims for which dollar tolerance apply, AIPs are not required to correct claims that are below the dollar tolerances. There is no time limit for when a corrected claim can be prepared. Even though the reason for the corrected claim is not discovered until the subsequent crop year(s), the corrected claim will be prepared if it is to be corrected in accordance with the procedures in paragraph 1238.

(a) There are no dollar tolerances for preparing corrected claims due to items (1)(c)(d) and (h) above.

(b) When errors as stated in (1)(a), (b), and (g) above are discovered, a corrected claim will be prepared if the underpayment or overpayment is in excess of the FCIC-approved tolerance ($250). This tolerance applies on a policyholder basis. The results of a review on multiple policies held by a single policyholder within a county will be combined to determine the applicability of the tolerance.

(5) Write "Corrected Claim" in the heading on all copies of the PW and prepare it in accordance to the applicable crop LASH.

(6) Document on a Special Report why the corrected claim was prepared. The insured and adjuster shall sign all documents prepared. If the insured refuses to sign, document the reason for the refusal on a Special Report. Submit the corrected claim and Special Report to the person or office designated by the AIP. Document on the Special Report at least the following:

(a) The circumstance(s) which resulted in erroneous data (production, acreage, share, etc.) on the original claim;

(b) Insured's explanation for reporting incorrectly;

(c) The name of the person finding the error and the manner used to establish the correct information. Determine if the insured was deliberately withholding or concealing production or other information;

(d) Calculations of indemnity from original and corrected claim in the Narrative of the PW or on a Special Report. Include documentation of contract indemnity to show that the corrected claim was prepared in accordance to the FCIC approved tolerances for a policyholder within a county; and

(e) All other pertinent information.

1239 Documenting Insured's Death after Insurance Attached & There is a Claim

If the insured has deceased after insurance attached (i.e., for annual crops, planted by the FPD or within the LPP (if applicable); or for perennial crops, the calendar date insurance attaches) for any insured crop, transmit the PW to the next level of supervision with an attached Special Report showing the following:

(1) Date of death.

(2) If an indemnity is due, the beneficiary entitled to the indemnity must be determined and documented in the contract file folder. The documentation must include the name, mailing address, capacity of person entitled to indemnities, policy number, crop, crop year, unit, and circumstances requiring the naming of the beneficiary.

(3) The contract will remain in force for the crop year for those crops. A crop inspection is not required if the AR is filed by the ARD.

1240 Bankruptcy

(1) It is important that the AIP be notified promptly when an insured has filed for bankruptcy or is in bankruptcy.

(2) If the adjuster gains knowledge of the insured filing or being in bankruptcy during a loss adjustment inspection, the adjuster will promptly inform the AIP after obtaining the following information:

(a) Insured's name,
(b) Contract number,
(c) Insured's social security or tax I.D. number,
(d) If possible, the bankruptcy number assigned by the court, and
(e) If possible, the court or district court in which the bankruptcy is filed.

(3) The adjuster will complete the loss adjustment inspection in its entirety and will attach a Special Report with the information stated in (2) above.

(1) When crops are planted in low level soil moisture that continues to stay low, it often results in extremely poor germination of the crop with very little or no survival of what did germinate. When areas of the country that are subject to wind erosion experience this situation, it is unlikely that producers in those areas can establish any cover crop to keep the topsoil from blowing. To deter wind erosion in these areas, the county NRCS, soil specialists from the local CES, etc., may recommend that the existing soil surfaces not be disked, plowed, etc., in order to preserve existing soil surfaces and existing plants and plant residue.

(2) If conditions exist as described in item (1) and the county NRCS, County Food & Agriculture Council, and/or a soil specialist from the CES recommend that existing soil surfaces, plants and plant residue not be disturbed by disking, plowing, etc., in order to deter wind erosion, the AIP may authorize finalization of claims prior to destruction of the crop. This authorization is to be used only if the insured certifies that the crop will not be harvested and the acreage will be put to its intended other use when there is sufficient moisture. These procedures apply to immature and mature UH crop acreage.

(3) Obtain the insured's certification that the crop will not be harvested on the Certification Form at the time the claim is signed. Complete the Certification Form as instructed in this handbook, with these exceptions:

(a)	Intended Use	Enter the insured's intended future use.
(b)	Actual Use	Enter N/A.
(c)	Date	Enter N/A.
(d)	Remarks	Enter any pertinent information.
(e)	Insured's Signature & Date	Obtain insured's signature and date of signature. (The form should be signed on the same day that the claim is signed.)
(f)	Accepted or Rejected	Mark "Accepted" or "Rejected," as appropriate.
(g)	Code No. and Field Person's Signature	Adjuster's signature, code and date of signature. (The form should be signed on the same day that the insured signed the PW.)

(4) If this authority is utilized, the AIP will monitor the insured's certified disposition of the crop by implementing a random review of not less than ten percent (10%) of such claims after sufficient moisture is received to allow destruction of the crop.

(5) In the event that it is found that a crop has been harvested from the released acreage and the harvested production is greater than the appraised production, a corrected claim will be prepared using the harvested production if the amount of indemnity will be reduced.

(6) Include in the insured's loss file the following, but not limited to:

(a) The written recommendation from the NRCS, soil specialist from CES, or other acceptable entity to not disturb the soil surface, crop, or crop residue;

(b) Pictures documenting this condition;

(c) The certification form signed by the insured and adjuster; and

(d) Paperwork from any random review of this unit.

1242 Chemical Damage due to Adverse Weather Condition

(1) Although chemical carryover is not a named insured peril under the insurance contract, any loss of production caused by chemical carryover damage resulting from a named peril is covered, provided the insured followed GFPs.

Example: Drought extending from one crop year into another crop year caused chemical carryover damage to the next year's crop. Such damage is covered provided the insured followed recognized GFPs (i.e., the chemical was appropriate for the crop, applied at the proper times, the proper amount applied in accordance with the manufacturer's instructions, and the insured adhered to any manufacturer warnings about planting under certain conditions, etc.

(2) Any payments or replacement product value(s) from chemical companies or suppliers as compensation for loss of production must be converted to an uninsured COL appraisal as instructed in (4) below.

(3) Any loss of production caused by chemical damage resulting from excess precipitation causing the chemical previously applied to the crop to prematurely release all at once, is covered provided the insured followed recognized GFPs (i.e., the chemical was appropriate for the crop, applied at the proper times, the proper amount applied in accordance with the manufacturer's instructions, the insured adhered to any manufacturing warnings about planting under certain conditions, etc.). However, any payments or replacement product value(s) from chemical companies or suppliers as compensation for loss of production must be converted to an uninsured COL appraisal as instructed in (4) below.

(4) Calculate the uninsured cause appraisal by dividing the payment (or replacement product value) by the insured's price election for the insured crop. Include, as an uninsured COL appraisal, any payments or replacement product values:

(a) Provided to the insured,
(b) Pending,
(c) Offered to the insured (even if such offer has been rejected by the insured), and/or
(d) For which the insured might be eligible if a claim to the chemical company or supplier had been filed.

(5) Explain your calculations in the Narrative of the PW or on a Special Report.

1243 Simplified Claim Process

(1) AIP and producer participation in SCP is voluntary.

(2) Eligible crops are: Almonds, buckwheat, barley, canning and processing sweet corn, canola, corn, cotton, dry beans, dry peas, flax, grain sorghum, green peas, oats, peanuts, popcorn, rapeseed, rice, rye, soybeans, sugar beets, sunflowers, walnuts, and wheat.

Claims involving QA for the crops listed above that have pre-established DFs (to determine the QAF) for the level and type of damage in the SP quality provisions will qualify for SCP.

Exception: Claims involving substances or conditions injurious to human or animal health will not qualify for SCP.

Factors that affect quality must be determined by a licensed grain grader as specified in subparagraph 1102B. A verifiable document (e.g., grade certificate) from a licensed grader must be included with the SCP form. The grade slip must include insured's name, the applicable crop, and crop year.

(3) Claims involving any of the following conditions are not eligible:

(a) Farm-stored production, even if weighed and returned to farm.

(b) Claims with only PP, and PP claims that have not been finalized prior to the submission of the SCP claim for the planted portion of the unit.

(c) Corrected claims.

(d) Claims with delayed notices or delayed claims.

(e) Claims requiring a revised AR unless it is a downward revision in liability, that results from third-party verified documentation agreed to, and supplied by the insured.

(f) AIP employees, loss adjusters, agents, or FCIC/RMA employees or any spouse or family member residing in the same household as any such person.

(g) Zero production is reported.

(h) Production fed to livestock.

(i) Crops covered under a pilot program that has been in effect for 2 or fewer crop years.

(j) Claims for crops other than cotton involving quality adjustment if:

(i) One of the qualifying quality deficiencies is due to a substance or condition injurious to human or animal health; e.g., Aflatoxin.

(ii) There are no pre-established DFs (to determine QAFs) contained in the AD for the level or type of damage.

(4) Eligible crop policies may be designated in any risk sharing fund of the SRA.

(5) Crop policies with BU, OU, WFU, EU, EP, or MCEU are eligible, provided all other SCP criteria are met.

(6) SCP can be used on a unit containing both planted and prevented planted acreage provided a PP claim has been finalized prior to submission of the SCP claim on the planted portion of the unit. However, SCP cannot be used on a unit containing only PP acreage.

(7) Dollar Tolerances for SCP

(a) The gross indemnity (insured's share prior to any dollar amount due the AIP) must not be greater than $20,000 for any OU. The gross indemnity must not be greater than $40,000 for any BU, WFU, EU, EP, or MCEU.

When calculating the gross indemnity, replanting payments and PP payments shall be excluded. PP Payments are not considered in the SCP dollar tolerance because they are a separate payment from the payment for the planted acres.

(b) SCP dollar tolerances are based on dollar amount of the production loss; therefore, if the insured crop is insured under the RP plan and the harvest price causes the dollar indemnity to exceed the SCP limit, the claim is still eligible for SCP.

(8) All planted acreage in the unit must be harvested and the production must be sold or in commercial storage.

Exception: Claims with an on-site preliminary inspection where acreage was determined, appraised, and an acreage release executed for the unit may be finalized under SCP, provided none of the appraised acres have been harvested.

(a) Third-party written verification must be available and the insured must submit these with the completed SCP form that accounts for all production from all indemnified units. The insured must write beside each load on the settlement sheet or warehouse receipt, the unit numbers and or field identification from which this production came. If only a field identification is shown, the adjuster must be able to verify that the field identification can be correlated with the unit numbers for the crop/county for the current crop year. If the field identification cannot be correlated to a unit number for the crop/county, the settlement sheet or storage records are not considered acceptable.

(b) Settlement sheets or summary sheets for sold production or warehouse receipts for production in commercial storage are acceptable written verification; however, individual load weight tickets are not acceptable.

(c) No portion of the crop may be left in the field except appraisals made on preliminary inspections as outlined in the "Exception" above.

(d) Copies of either FSA acreage measurements or third-party measurements as allowed by paragraph 821, must also be provided by the insured, if available. Otherwise, copies of aerial photos identifying each field, crop planted in each field, and number of acres in each field must be provided with the completed SCP form. In all cases, the applicable indemnified unit acreage must be identified. If the insured does not have acceptable acreage measurements available, but acceptable previous measurements (as defined in subparagraph 821D) are available to the AIP, the AIP must use these measurements.

(9) AIPs must not allow their agents to complete or become involved in the SCP. Agents are allowed to mail, e-mail scanned documents, or fax the SCP form(s) and supporting documents to the designated AIP representative/office but cannot help the insured complete the SCP form.

(10) The AIP must instruct the insured to submit the SCP form within the time frame specified in the CP or timeframe specified in the quality provisions section of the SP, if applicable. (Also refer to subparagraph 702B if the AIP has extended the time the insured has to harvest the crop due to adverse weather preventing harvest by the calendar date for the EOIP). SCP forms and required documentation (e.g., maps, settlement sheets, etc.) received after this timeframe (SP, if applicable), must be denied in accordance with section 14 of the BP.

(11) If FCIC determines that an AIP or managing general agent does not have a satisfactory performance record as defined in the SRA, use of this procedure by such AIP or managing general agent shall be suspended until such time that a satisfactory performance record has been restored.

(12) The AIP shall not use the SCP for any insured if there is any reason to suspect fraud, waste or abuse.

(13) SCP claims data must be processed through PASS in accordance with Appendix III requirements. The AIP is responsible for administering the SCP in a manner that ensures accurate information is collected and submitted through PASS.

(14) All SCP claims must be completed on a form developed by the AIP that captures all the required loss information from the insured as contained in the DSSH. The AIP is also responsible for providing the insured the comprehensive completion instructions as shown in exhibit 17 to complete the SCP form. If the item numbers are not the same for a required form item, the AIP may change to the correct item number for the AIP's SCP Form.

1244 Large Claim Reviews & FCIC Participation

(1) In accordance with Section IV, Large Claims of Appendix I of the SRA, it states: As a condition of reinsurance and prior to commencing any loss adjustment activity, the Company agrees to comply with all provisions of FCIC's Large Claims Procedures, as applicable.

(2) Refer to the Large Claims Handbook, FCIC-14040 for detailed procedures for RMA participation in Large Claim Reviews.

1245-1300 (Reserved)

PART 13 FARM SERVICE AGENCY

1301 Farm Service Agency Information

Although insured producers are not required to certify acreage to FSA, AIPs may use certain information or documents from the FSA office as one option to verify and/or determine data for loss adjustment inspections if it has not already been done by a previous inspection for the crop year.

(1) FSA offices are required to ensure that anyone requesting information on another person is authorized.

(2) FSA will not release documents to adjusters, AIP employees, or RMA employees unless they can provide proof that they are authorized to access the producer's records. The adjuster, AIP employees, or RMA employees should start by identifying themselves to FSA and stating the AIP that the adjuster or AIP employee is representing. They must provide FSA with at least one of the items listed in (3) below:

(3) Acceptable proof includes one or more of the following for the current crop year:

(a) A producer-signed form (meeting FCIC-form standards) showing request for cancellation and transfer of the insured's MPCI insurance to the AIP for which you are working;

(b) A PW completed or partially completed indicating loss adjustment work will be performed for the producer;

(c) Summary of Insurance Protection (or Schedule of Insurance);

(d) Notice of Acceptance; and

(e) NOL.

(4) FSA may require AIP employees who are not officially titled a loss adjuster to provide some type of proof that shows the AIP employee is authorized to perform loss adjustment activities, quality control, or compliance-related activities (with or without a NOL being filed) for the AIP and may be asked to provide some type of documents/printouts showing the producer is insured with the AIP being represented. Likewise, FSA may require RMA employees to provide a document/card that authorizes the employee to be involved in compliance-related activities for RMA.

1302 Information Requests to Farm Service Agency

A. General Information

(1) The following information applies only to requests for carrying out loss adjustment activities and related compliance activities.

A. General Information (continued)

(2) Do not make requests on the FSA-426-A for normal loss adjustment activities and compliance-related activities. Refer to FCIC Program Integrity Handbook (4-RM) for requests that are in conjunction with discrepancy reviews assigned by RMA, and suspected program abuse, misuse, or fraud reviews that have been assigned to the AIP by the RMA compliance office.

(3) FSA will not honor requests for information from adjuster's, AIP employees, or RMA employees carrying out loss adjustment activities unless a NOL has been filed or they can provide evidence to FSA that they are authorized to be involved in QA activities or compliance activities for producers who have not filed a NOL; e.g., AR Reviews, Growing Season Reviews, APH reviews, etc. Refer to subparagraph 1301(4).

(4) FSA information provided to adjusters, AIP employees, or RMA employees carrying out loss adjustment, quality control, or compliance-related activities shall be used solely for the purpose of completing loss adjustment, quality control, or compliance related activities.

B. Requesting Information on the FSA-426

FSA offices require that requests are made on an FSA-426, MPCI/FCIC Information Request Worksheet. The FSA-426 is a self-explanatory form that was designed to provide uniformity for processing crop insurance information and as a measurement tool to record the number of requests. The FSA-426 can be found at www.fsa.usda.gov.

(1) FSA will not accept requests on AIP-created request forms.

(2) If adjusters, AIP employees, or RMA employees who are involved in loss adjustment, quality control, or compliance-related activities are requesting documents for previous crop years, the years for which the information is requested MUST be noted in the remarks section of the FSA-426.

(3) FSA requires that item 6 of the FSA-426 be completed with only the last 4 digits of the producer's tax ID number.

(4) FSA offices have been instructed to strikeout (black out) any personal information that does not apply to the specific producer identified on the FSA-426.

(5) The FSA-426 may be mailed, faxed, or submitted in person. Most FSA offices will require that the FSA-426 be submitted in advance of filling the request. Because of this, it is best to submit the request as soon as possible after receiving the NOL.

(6) Only the adjuster, AIP claim's supervisor, or RMA employee may submit the FSA-426. Agents cannot submit requests on the FSA-426 nor can they obtain requests for the purpose of loss adjustment activities.

B. Requesting Information on the FSA-426 (continued)

(7) FSA offices in most cases will have the request filled within 3 workdays of the receipt of the request. If an FSA office continually takes longer than this, or if an FSA office refuses to fill properly completed and filed requests for insured's FSA-426s made by the AIP adjusters, loss adjustment or quality control personnel for the reasons outlined in subparagraph A above, notify the AIP. The AIP will then notify Insurance Services of the situation. Insurance Services will then coordinate with FSA to resolve the problem.

1303 Obtaining Requested Documents from Farm Service Agency

Requested documents are obtained in the following ways:

(1) The FSA county office may mail or fax the documents requested on the FSA-426 to the adjuster, authorized AIP employee or RMA employee; HOWEVER, the adjuster, AIP employee, or RMA employee MUST request that the information is mailed or faxed; or

(2) The adjuster, AIP or RMA employee may pick the documents up at the applicable FSA county office. To avoid delays in obtaining copies, the adjuster AIP or RMA employee will work with FSA county office personnel during busy periods, program sign-up, etc., to determine the best times to come into the office to obtain the forms and aerial photographs.

1304 Verification Materials/Information

If available, the following FSA office material and information can be used to verify data and to make determinations.

(1) Aerial photographs and other required forms or data.

(2) Existing acreage figures.

(a) Identification of permanent fields.

(b) FSA measurements which the insured obtained through FSA-measurement service. Measurements may be used as "Determined Acres" for loss adjustment purposes as outlined in paragraph 821.

(c) Identification and measurements obtained from large-scale aerial photographs. Refer to paragraph 821 regarding "Determined Acres."

(d) Cropland acres from the FSA-578 (Producer Print) to use in calculating eligible prevented planted acreage. Refer to the prevented-planting procedures in the PPSH.

(3) Insured's entity recorded with FSA to compare against entity recorded with the AIP for crop insurance purposes. (The entities should agree; if they do not, further research is needed to establish the correct entity.) Also refer to the GSH.

(4) Insured's share reported on the FSA-578 (Producer Print) (used to compare with share reported to the AIP for insurance purposes). Refer to the GSH.

(5) The FSA FN and/or legal description of land (used to compare FSA FN and legal descriptions recorded on the insured's AR and any other crop insurance document where it is pertinent, such as APH forms, etc.).

(6) Any other information that may be helpful or is needed or required in procedures for determinations or verification purposes.

Acronyms and Abbreviations

The following table provides the acronyms and abbreviations used in this handbook.

Approved Acronym/Abbreviation	Term
ACT	Federal Crop Insurance Act (Pub. L. 104-127)
AD	Actuarial Documents
AIP	Approved Insurance Provider
APH	Actual Production History
AR	Acreage Report
ARD	Acreage Reporting Date
ARPI	Area Risk Protection Insurance
ASA	American Society of Agronomy
BP	Common Crop Insurance Policy Basic Provisions
BU	Basic Unit
CAT	Catastrophic Risk Protection Endorsement
CC	Continuous Cropping
CCC	Commodity Credit Corporation
CCD	Contract Change Date
CEPP	Commodity Exchange Price Provisions
CES	Cooperative Extension Service
CFO	Compliance Field Office (of Risk Management Agency)
CFR	Code of Federal Regulations
CIH	FCIC-18010 Crop Insurance Handbook
CLU	FSA Common Land Unit (field)
COL	Cause(s) of Loss
CP	Crop Provisions
CPF	Commingled Production Factor
CRP	Conservation Reserve Program
CSREES	Cooperative State Research, Education, and Extension Service
CWC	Chemical Weed Control
DF	Discount Factor
DO	Dollar Amount of Insurance
DSSH	FCIC-24040 Document and Supplemental Standards Handbook
EIN	Employers Identification Number
EDP	Electronic Data Processing
EOIP	End of Insurance Period
EP	Enterprise Unit by Irrigated and Non-Irrigated Practices
EU	Enterprise Unit
FAC	Following Another Crop
FAD	Final Agency Determination
FCI	Federal Crop Insurance
FCIC	USDA Federal Crop Insurance Corporation
FGIS	USDA Federal Grain Inspection Service (of GIPSA)
FM	Foreign Material
FN	Farm Number

Approved Acronym/Abbreviation	Term
FPD	Final Planting Date
FSA	USDA Farm Service Agency
GFP	Good Farming Practice
GIPSA	USDA Grain Inspection, Packers, and Stockyards Administration
GIS	Geographical Information System
GPA	Guarantee Per Acre
GPS	Global Positioning System
GSH	General Standards Handbook
GSI	Growing Season Inspection
IBR	Intertilled Between Rows
IRR	Irrigated
IRS	Internal Revenue Service
ITIN	Individual Tax Identification Number
ITS	Ineligible Tracking System
H	Harvest
LAC	Loss Adjustment Contractor
LAF	Liability Adjustment Factor
LAM	FCIC-25010 Loss Adjustment Manual Standards Handbook
LASH	Loss Adjustment Standards Handbook (individual crop LASHs)
LMP	Local Market Price
LPD	Late Planting Date
LP	Late Planting
LPP	Late Planting Period
LRR	Late Reporting Reduction
MBE	Malting Barley Endorsement
MCEU	Multi-County Enterprise Unit
MI	Misreported Information
MSDS	Material Safety Data Sheets
NAD	National Appeals Division
NAICC	National Alliance of Independent Crop Consultants
NAP	FSA Non-Insured Assistance Program
NFAC	Not Following Another Crop
NIBR	Not Intertilled Between Rows
NIRR	Non Irrigated
NOL	Notice of Loss
NOP	National Organic Program
NPS	No Practice Specified
NRCS	USDA Natural Resources Conservation Service
OC	Organic Certified
OFPA	Organic Foods Production Act of 1990 (7 U.S.C. 6502.)
OT	Organic Transitional
OU	Optional Unit
PASD	RMA, Product Administration and Standards Division

Approved Acronym/Abbreviation	Term
PASS	Policy Acceptance and Storage System
PFTS	Precision Farming Technology Systems
PM	RMA, Product Management
PP	Prevented Planting
PPB	Parts Per Billion
PPM	Parts Per Million
PPSH	Prevented Planting Standards Handbook
PRD	Production Reporting Date
P/T	Practice/Type
PTC	Production to Count
PW	Production Worksheet (a.k.a. claim for indemnity form or claim form)
QAF	Quality Adjustment Factor
RAN	RMA Assigned Number
RIV	Reduction In Value
RMA	Risk Management Agency
RMSD	RMA, Risk Management Services Division
RO	RMA, Insurance Services Regional Office
RP	Revenue Protection & Revenue Protection with Harvest Price Exclusion
RSA	Representative Sample Area
RSC	Representative Sample of Crop
SBI	Substantial Beneficial Interest
SCD	Sales Closing Date
SCP	Simplified Claim Process
SF	Summer Fallow
SP	Special Provisions
SRA	Standard Reinsurance Agreement
SSN	Social Security Number
TIN	Tax Identification Number
TP	Type/Practice
TW	Test Weight
TWF	Test Weight Factor
TWPF	Test Weight Pack Factor
UDQ	Unit Deficiency Quantity
UH	Unharvested
USDA	United States Department of Agriculture
USGSA	United States Grain Standards Act
USWA	United States Warehouse Act
WA	Written Agreement
WAH	FCIC-24020 Written Agreement Handbook
WFRP	Whole-Farm Revenue Protection
WFU	Whole Farm Unit
YP	Yield Protection
ZMV	Zero Market Value

Terms and Definitions

Refer to the GSH for Terms and Definitions.

Causes of Loss

Some CP may contain specific COL definitions; e.g., wind, frost, or freeze. Please refer to the CP for any such specifics.

Cause of Loss Names & Codes		
Loss Cause:	**Code:**	**Applicable To:**
No Indemnity	(00)	All Crops
Decline of Price	(01)	All crops insured under, WFRP, Livestock Risk Protection, Livestock Gross Margin, pecans, ARH plans of insurance, RP. For RP, this is applicable when the harvest price falls below the projected price and is the primary or secondary COL. This is applicable for pecans when a decline in the market price used to determine the indemnity is the primary or secondary contributor of the loss, or for ARH plans of insurance when an inadequate market price results in a revenue loss.
Asian Soybean Rust	(09)	Only: Soybeans
Drought [1/, 2/]	(11)	All Crops Except: Texas Citrus Fruit, Texas Citrus Trees, Florida Citrus, California Citrus Tree, Cultivated Clams, Florida Fruit Trees, Livestock, Fresh Market Peppers, Raisins, Rice, Fresh Market Tomatoes ($ Plan), unless this COL is provided on the SP.
Heat [2/]	(12)	All Crops Except: Florida Citrus, Texas Citrus Fruit, Texas Citrus Trees, California Citrus Tree, Cultivated Clams, Florida Fruit Trees, Livestock, Fresh Market Peppers, Raisins, and Fresh Market Tomatoes ($ Plan).
FIS (Failure of Irrigation (water) Supply)	(13)	All Crops Except: Florida Citrus, Cultivated Clams, Florida Fruit Trees, Livestock, and Raisins.
FIE (Failure of Irrigation Equipment)	(14)	All Crops Except: California Citrus Tree, Cultivated Clams, Livestock, Pecan Trees, Raisins and Texas Citrus Trees.
Inability to prepare land for Irrigation	(15)	All Crops Except: California Citrus Tree, Cultivated Clams, Livestock, Pecan Trees, Raisins, and Texas Citrus Trees.
Hail [2/]	(21)	All Crops Except: Cultivated Clams, Florida Fruit Trees, California Citrus Tree, Livestock, and Raisins.
Excess Sun (Sunburn)	(22)	Only: Apples
Excess Moisture/Precip/Rain [2/]	(31)	All Crops Except: Florida Citrus, California Citrus Tree, Livestock, and Cultivated Clams.
***Frost [2/, 3/]	(41)	All Crops Except: Florida Citrus, Cultivated Clams, Florida Fruit Trees, California Citrus Tree, Livestock, Pecan Trees, Texas Citrus Trees, Fresh Market Peppers, Raisins, and Fresh Market Tomatoes ($ Plan).
***Freeze [2/, 3/]	(42)	All Crops Except: Raisins and Livestock.
Cold Winter [2/]	(43)	All Crops Except: Florida Citrus, Texas Citrus Fruit, Texas Citrus Trees, California Citrus Tree, Cultivated Clams, Florida Fruit Trees, Livestock, Fresh Market Peppers, Pecan Trees, Raisins, and Fresh Market Tomatoes ($ Plan).
Cold Wet Weather [2/]	(44)	All Crops Except: Florida Citrus, Texas Citrus Fruit, Texas Citrus Trees, California Citrus Tree, Cultivated Clams, Florida Fruit Trees, Livestock, Fresh Market Peppers, Pecan Trees, Raisins, and Fresh Market Tomatoes ($ Plan).

Causes of Loss (Continued)

Cause of Loss Names & Codes		
Loss Cause:	**Code:**	**Applicable To:**
ICH [2/] (Insufficient Chill Hours)	(45)	All Crops Except: Category B Crops, Category D Crops, Florida Fruit Trees, California Citrus Tree, Livestock, Pecan Trees, Texas Citrus Fruit and Texas Citrus Trees.
Flood [2/]	(51)	All Crops Except: Florida Citrus, Texas Citrus Fruit, Cultivated Clams, California Citrus Tree, Florida Fruit Trees [6/], Livestock, Fresh Market Peppers, Raisins, and Fresh Market Tomatoes ($ Plan).
ARPI Crops Only	(55)	Crops insured under the following plans of insurance: Area Yield Protection, ARPI, Area Revenue Protection – Harvest Price Exclusion, Rainfall Index, Vegetation Index, Supplemental Coverage Optional – Yield Protection, Supplemental Coverage Option – Revenue Protection, Supplemental Coverage Option – Revenue Protection with Harvest Price Exclusion, Stacked Income Protection Plan, Stacked Income Protection Plan – Revenue Protection with Harvest Price Exclusion, and Margin Protection
***Wind/Excess Wind [2/, 4/]	(61)	All Crops Except: Florida Citrus Fruit Types I, II, II, and IV, Cultivated Clams, Livestock, California Citrus Tree, Fresh Market Peppers, Raisins, and Fresh Market Tomatoes ($ Plan).
Hot Wind [2/]	(62)	All Crops Except: Florida Citrus, Texas Citrus Fruit, Texas Citrus Trees, California Citrus Tree, Cultivated Clams, Florida Fruit Trees, Livestock, Fresh Market Peppers, Raisins, and Fresh Market Tomatoes ($ Plan).
Cyclone [2/]	(63)	All Crops Except: Florida Citrus, Texas Citrus Fruit, Texas Citrus Trees, California Citrus Tree, Cultivated Clams, Florida Fruit Trees, Livestock, Fresh Market Peppers, Raisins, and Fresh Market Tomatoes ($ Plan).
Tornado [2/]	(64)	All Crops Except: Cultivated Clams, Florida Fruit Trees, California Citrus Tree, Texas Citrus Trees, Livestock, and Raisins.
Tidal Wave/Tsunami	(65)	Only: Cultivated Clams, and Hawaii Tropical Fruit, and Hawaii Tropical Fruit Trees.
Oxygen Depletion	(66)	Only: Cultivated Clams.
Storm Surge	(67)	Only: Cultivated Clams.
***Insects [4/]	(71)	All Crops Except: Florida Citrus, California Citrus Tree, Texas Citrus Trees[7/], Cultivated Clams, Florida Fruit Trees[7/], Figs, Livestock, and Raisins.
***Predation [5/]	(73)	Only: Cultivated Clams.
Ice Floe	(74)	Only: Cultivated Clams.
Salinity	(76)	Only: Cultivated Clams.
Disease, Aquaculture	(80)	Only: Cultivated Clams
***Plant Disease [8/]	(81)	All Crops Except: Florida Citrus [9/], Texas Citrus Trees [9/], Cultivated Clams, California Citrus Tree, Florida Fruit Trees [9/], Figs, Livestock, and Raisins (see [8/] for Hawaii Tropical fruit, and Hawaii Tropical Fruit Tree.)

Cause of Loss Names & Codes		
Loss Cause:	**Code:**	**Applicable To:**
Mycotoxins (such as Aflatoxin or Vomitoxin)	(82)	All Crops Except: Texas Citrus Trees, California Citrus Tree, Chile Peppers, Cultivated Clams, Florida Fruit Trees, Hawaii Tropical Trees, Livestock, Macadamia Trees, and Mint.
Fire Blight	(84)	Only: Apple Trees
Federal or State Ordered Destruction (e.g., substances or conditions injurious to human or animal health)	(85)	All Crops under section 15(j) of the BP.
Falling Numbers	(87)	Only: Wheat and only for the classes of wheat specified on the SP.
***Fire [10/]	(91)	All Crops Except: Cultivated Clams, Florida Fruit Trees, Livestock, and Raisins.
***Hurricane or Tropical Depression [2/,11]	(92)	All Crops Except: Texas Citrus Fruit, Texas Citrus Trees, Florida Fruit Trees, California Citrus Tree, Livestock, Peaches, Raisins, and Fresh Market Sweet Corn.
Wildlife [4/]	(93)	All Crops Except: Florida Citrus, Texas Citrus Trees, Cultivated Clams, California Citrus Tree, Florida Fruit Trees, Livestock, Pears, Fresh Market Peppers, Raisins, and Fresh Market Tomatoes ($ Plan).
House Burn/Pole Burn	(95)	Only: Tobacco
Earthquake	(97)	All Crops Except: Florida Citrus, Texas Citrus Fruit, California Citrus Tree, Texas Citrus Trees, Cultivated Clams, Florida Fruit Trees, Livestock, Fresh Market Peppers, Pecan Trees, Raisins, and Fresh Market Tomatoes ($ Plan).
Volcanic Eruption	(98)	All Crops Except: Florida Citrus, Texas Citrus Fruit, Texas Citrus Trees, California Citrus Tree, Cultivated Clams, Florida Fruit Trees, Livestock, Fresh Market Peppers, Pecan Trees, Raisins, and Fresh Market Tomatoes ($ Plan).
***Other (Snow, Lightning, Etc.) [2/]	(99)	All Crops Except: Florida Citrus, Texas Citrus Fruit, Texas Citrus Trees, California Citrus Tree, Cultivated Clams, Florida Fruit Trees, Livestock, Fresh Market Peppers, Raisins, Fresh Market Sweet Corn, and Fresh Market Tomatoes ($ Plan).

1/ If the insured practice is IRR, drought cannot be listed as the COL. See subparagraph 301E for more information.

2/ If the applicable CP list "adverse weather" as a COL, the footnoted cause is considered "adverse weather." For statistical purposes, RMA requires that "adverse weather" is broken down into the specific cause; e.g., drought. If "Other" is used, it must be explained on the PW.

Note: Verify that the insufficient chill hours occurred during the insurance period.

3/ SP may state freeze or frost is not an insurable cause if this cause occurs after the specified date or for some crops is not an insurable cause if adequate frost/freeze protection is not in effect.

4/ Some policies may be limited or restricted for this COL; see the individual CP for specifics.

*** 5/ This COL is excluded unless allowed by the SP.

*** 6/ Flooding is covered only if allowed by the SP.

7/ Coverage for insects as provided by SP.

8/ Some policies may be limited or restricted for this COL; see the individual CP for specifics. This cause is applicable to Hawaii Tropical Trees when the AIP authorizes destruction of live Banana trees determined by the AIP to have BBTV or Papaya trees determined to have PRV. This cause is also applicable to loss of fruit insured under Hawaii Tropical Fruit CP when fruit trees are infected with a disease for which the AIP authorizes destruction of the trees. In addition, for other diseases, sufficient or proper control measures must have been applied.

9/ Disease as specifically provided by SP.

10/ Fire must be due to an act of nature. For Hawaii Tropical Fruit, Hawaii Tropical Trees, and prunes; loss due to fire is not covered if weeds or undergrowth are not controlled and pruning debris is not removed from the grove.

11/ The Florida Citrus Fruit CP and Cultivated Clam Pilot CP list "Hurricane" as an insured COL, but not "Tropical Depression."

***

Hail/Fire Exclusion Appraisal Factor Chart

The following table lists the appraisal factors for the following levels of coverage when the percent of hail/fire loss exceeds the difference between one hundred percent (100%) and the level of coverage percent.

% Hail Damage	65%	70%	75%	80%	85%
15%	0	0	0	0	0
16%	0	0	0	0	.0118
17%	0	0	0	0	.0236
18%	0	0	0	0	.0354
19%	0	0	0	0	.0472
20%	0	0	0	0	.0590
21%	0	0	0	.0125	.0708
22%	0	0	0	.0250	.0826
23%	0	0	0	.0375	.0944
24%	0	0	0	.0500	.1062
25%	0	0	0	.0625	.1180
26%	0	0	.0133	.0750	.1298
27%	0	0	.0267	.0875	.1416
28%	0	0	.0400	.1000	.1534
29%	0	0	.0533	.1125	.1652
30%	0	0	.0667	.1250	.1770
31%	0	.0143	.0800	.1375	.1888
32%	0	.0286	.0933	.1500	.2006
33%	0	.0429	.1067	.1625	.2124
34%	0	.0571	.1200	.1750	.2242
35%	0	.0714	.1333	.1875	.2360
36%	.0154	.0857	.1467	.2000	.2478
37%	.0308	.1000	.1600	.2125	.2596
38%	.0462	.1143	.1733	.2250	.2714
39%	0615	.1286	.1867	.2375	.2832
40%	.0769	.1429	.2000	.2500	.2950
41%	.0923	.1571	.2133	.2625	.3068
42%	.1077	.1714	.2267	.2750	.3186
43%	.1231	.1857	.2400	.2875	.3304
44%	.1385	.2000	.2533	.3000	.3422
45%	.1538	.2143	.2667	.3125	.3540
46%	.1692	.2286	.2800	.3250	.3658
47%	.1846	.2429	.2933	.3375	.3776
48%	.2000	.2571	.3067	.3500	.3894
49%	.2154	.2714	.3200	.3625	.4012

Hail/Fire Exclusion Appraisal Factor Chart (Continued)

% Hail Damage	65%	70%	75%	80%	85%
50%	.2308	.2857	.3333	.3750	.4130
51%	.2462	.3000	.3467	.3875	.4248
52%	.2615	.3143	.3600	.4000	.4366
53%	.2769	.3286	.3733	.4125	.4484
54%	.2923	.3429	.3867	.4250	.4602
55%	.3077	.3571	.4000	.4375	.4720
56%	.3231	.3714	.4133	.4500	.4838
57%	.3385	.3857	.4267	.4625	.4956
58%	.3538	.4000	.4400	.4750	.5074
59%	.3692	.4143	.4533	.4875	.5192
60%	.3846	.4286	.4667	.5000	.5310
61%	.4000	.4429	.4800	.5125	.5428
62%	.4154	.4571	.4933	.5250	.5546
63%	.4308	.4714	.5067	.5375	.5664
64%	.4462	.4857	.5200	.5500	.5782
65%	.4615	.5000	.5333	.5625	.5900
66%	.4769	.5143	.5467	.5750	.6018
67%	.4923	.5286	.5600	.5875	.6136
68%	.5077	.5429	.5733	.6000	.6254
69%	.5231	.5571	.5867	.6125	.6372
70%	.5385	.5714	.6000	.6250	.6490
71%	.5538	.5857	.6133	.6375	.6608
72%	.5692	.6000	.6267	.6500	.6726
73%	.5846	.6143	.6400	.6625	.6844
74%	.6000	.6286	.6533	.6750	.6962
75%	.6154	.6429	.6667	.6875	.7080
76%	.6308	.6571	.6800	.7000	.7198
77%	.6462	.6714	.6933	.7125	.7316
78%	.6615	.6857	.7067	.7250	.7434
79%	.6769	.7000	.7200	.7375	.7552
80%	.6923	.7143	.7333	.7500	.7670
81%	.7077	.7286	.7467	.7625	.7788
82%	.7231	.7429	.7600	.7750	.7906
83%	.7385	.7571	.7733	.7875	.8024
84%	.7538	.7714	.7867	.8000	.8142
85%	.7692	.7857	.8000	.8125	.8260
86%	.7846	.8000	.8133	.8250	.8378
87%	.8000	.8143	.8267	.8375	.8496
88%	.8154	.8286	.8400	.8500	.8614
89%	.8308	.8429	.8533	.8625	.8732
90%	.8462	.8571	.8667	.8750	.8850
91%	.8615	.8714	.8800	.8875	.8968

Hail/Fire Exclusion Appraisal Factor Chart (Continued)

% Hail Damage	65%	70%	75%	80%	85%
92%	.8769	.8857	.8933	.9000	.9086
93%	.8923	.9000	.9067	.9125	.9204
94%	.9077	.9143	.9200	.9250	.9332
95%	.9231	.9286	.9333	.9375	.9440
96%	.9385	.9429	.9467	.9500	.9558
97%	.9538	.9571	.9600	.9625	.9676
98%	.9692	.9714	.9733	.9750	.9794
99%	.9846	.9857	.9867	.9875	.9912
100%	1.0000	1.0000	1.0000	1.0000	1.0000

Instructions for using the "Decimal Part of a Percent" chart below: Add the whole number to the decimal percent.

Example: 58.7 hail damage @ 65% level of coverage (.3538 + .0108) = .3646 appraisal factor
.3646 X GPA = appraisal for uninsured causes.

	65%	70%	75%	80%	85%
.1	.0015	.0014	.0013	.0013	.0012
.2	.0031	.0029	.0027	.0025	.0024
.3	.0046	.0043	.0040	.0038	.0035
.4	.0062	.0057	.0053	.0050	.0047
.5	.0077	.0071	.0067	.0063	.0059
.6	.0092	.0086	.0080	.0075	.0071
.7	.0108	.0100	.0093	.0088	.0083
.8	.0123	.0114	.0107	.0100	.0094
.9	.0138	.0129	.0120	.0113	.0106

(RESERVED)

Claim Checklist Form Standards

A. General Information for AIP

(1) It is recommended that AIPs provide this or a similar checklist to adjusters for them to complete during each loss inspection. The AIP may choose to develop a similar checklist that has been modified to fit their region and the crops insured.

(2) The checklist is to be used as a tool to assist the adjuster in determining that important verifications have been made. It may be utilized for other purposes, such as review of adjusters' work, etc.

(3) If the AIP chooses to use this checklist, be aware that this checklist was designed to be used nationwide. There may be some items that are not applicable to a particular geographical area or crop. On the other hand, there may be items that are not included on this list because they are specific to only certain geographical areas or crops. Therefore, at the bottom of this checklist, space has been provided to add additional items that may be needed but have not been included.

B. Adjuster Completion Instructions

(1) Enter the insured's name, claim number, contract number, crop(s) and units inspected during the farm visit, and purpose of farm visit; e.g., AR review inspection, preliminary inspection, GSI, final inspection, etc.

(2) With a check mark, indicate "Yes" or "No" for each item on the checklist. If the item cannot be answered with a "Yes" or "No," explain on the line provided by each item or on the back of the checklist if more space is needed. Be sure to appropriately identify any comments made on the reverse side.

(3) Signature is optional unless otherwise locally instructed; however, it is recommended that adjusters sign the form to facilitate any necessary follow-up action.

(4) An indication that a particular item has been verified, such as "Special Option endorsements verified" is intended to be an indication that you not only verified that the insured had the option, endorsement, etc., but that you also verified the insured's eligibility for such option, etc., and that all applicable provisions have been met and applied properly in the adjustment of the loss.

Distribution: Place the completed checklist in the insured's contract folder. No other copies are required to be distributed unless otherwise instructed by the AIP.

Claim Checklist Form Standards (Continued)

_____ _____ _____
Insured's name Claim number Policy number

_____
Crop(s)-Unit(s)

Yes	No		
□	□	1	Insured Present
□	□	2	Insurable Entity verified
□	□	3	Timely Notice
□	□	4	Share Verified
□	□	5	Companion Contract Verified (if applicable)
□	□	6	Legal Description Verified
□	□	7	Practice(s) Insurability Verified
□	□	8	Insurable Type/Variety Verified
□	□	9	Planting Dates Verified
□	□	10	Unit/Unit Division Verified
□	□	11	Risk Area Verified
□	□	12	Insurable Cause of Loss
□	□	13	Similar Damage
□	□	14	Reasonable APH
□	□	15	Insurable Acreage
□	□	16	Sharing Interests
□	□	17	Option/Endorsements
□	□	18	Review Previous Reports
□	□	19	Previous Appraisals
□	□	20	Quality Adjustment Eligibility Verified
□	□	21	Acreage Determined/Method
□	□	22	Acreage Replanted
□	□	23	Replanting Payment
□	□	24	Certification Form
□	□	25	Sold Production Verified
□	□	26	Farm-stored Production Verified
□	□	27	Commingled Production
□	□	28	Fed Production Verified
□	□	29	Other Names/Entities for Production Verified
□	□	30	All Production Accounted For
□	□	31	Unusual/Controversial Circumstances
□	□	32	Reviewed Completed Claim with Insured or Insured's Representative
□	□	33	Obtained Signatures
□	□	34	Second Crop Acreage
□	□	35	Signatures
□	□	36	Other
□	□	37	Other

This example does not illustrate signature and date entries. Refer to instructions in paragraph B above.

Certification Form Standards and Completion Instructions

Refer to paragraph 831 for detailed information pertaining to uses of this form.

Required Item Titles and Completion Instructions for These Items

Item #	Item Title	Completion Instructions
1	Policy No.	Adjuster enters the policy number exactly as shown on the most recent policy confirmation.
2	Insured	Adjuster enters the name of insured printed exactly as shown on the most recent policy confirmation.
3	Date Originated	Adjuster enters the initial inspection date.
4	Crop	Adjuster enters name of crop.
5	FSA Farm/Tract/Field Number	Adjuster enters the Farm/Tract/Field Number from the AR after verification.
6	Mail To:	Adjuster enters Name of the individual (or office) and address of where the completed Certification Form will be mailed if not pre-printed on the form.
7	Unit No.	Adjuster enters unit number from the AR after verification.
8	Unit Acres (Practice/ Type)	Adjuster enters total acres, to tenths, of crop on the unit. Account for all crop acreage on the unit. For nursery enter the plant name.
9	Crop Year	Adjuster enters Crop Year.
Adjuster enters the following Statement above items 10-14: Replant, destruction, or Other Use of Acreage (plants for nursery) Identified above was completed on the date(s) shown.		
10	Field ID (Plant Location for Nursery)	Adjuster enters identification symbol for each field or subfield (corresponds to the entry for this item on the PW. For nursery, the adjuster enters the location of the plants. Leave items 10 thru 17 blank when completed for special delayed claims (see paragraph 702).
11	Intended Use	Adjuster enters intended use of the acreage in the field or subfield. For nursery, the plant name. Make separate line entries for different intended uses of fields or subfields (“plow-under,” “cut for hay,” “destroy Aflatoxin-infected corn,” “destroy ZMV production,” etc.).

Item #	Item Title	Completion Instructions
12	Acres (For Nursery - Plants)	Adjuster enters acres, to tenths, of the intended use (The acreage of all fields and subfields must equal the total acres in the unit as shown in item 8.); or when harvested production is to be destroyed, instead of acres, cross out "Acres" and write in the unit of measure of the crop (e.g., "bushels"), and enter the number of bushels or other applicable unit of measure for the crop to be destroyed. For Nursery: the adjuster enters the number of plants ZMV plants intended to be destroyed.
13	Actual Use	Insured enters the actual use of the acreage in the field (when completed). Make separate line entries for different actual uses. For Nursery: insured enters, destroyed ZMV plants.
14	Acres (Number of plants for Nursery)	Insured enters acres, to tenths, of actual use (The acreage of all fields and subfields must equal the total acres in the unit as shown in item 8.) or when harvested production is to be destroyed, instead of acres, cross out "Acres" and write in the unit of measure of the crop (e.g., "bushels"). The insured enters the actual number of bushels (or other applicable unit of measure for the crop) actually destroyed. For Nursery – Insured enters the number of plants destroyed.
15	Date	Insured enters the date that any acreage was replanted, crop with no market value (such as Aflatoxin-infected corn) was destroyed, for nursery the date the ZMV plants were destroyed, or that each field or subfield in the entire unit was put to another use.
16	Replant Cost Per Acre	For replant payments only: Insured enters his/her actual cost per acre for replanting.
17	Totals	Adjuster enters total acreage of intended use, and insured enters actual use, respectively.
18	Remarks	Insured notates: (1) Any remarks necessary to explain any entries on the form; and (2) When destruction of acreage or harvested production is required, the methods used to destroy the production and any other information pertinent to the destruction of the production.

Item #	Item Title	Completion Instructions
Required Footnote on the form: At the bottom of the Remarks block or other appropriate area of the form, the following must be pre-printed on the form: 1/ Refer to the crop policy qualifications for replanting payments.		
Required statement pre-printed directly above insured's signature block: The certification statement required by the current FCIC-24040, DSSH immediately followed by: "Additionally, I understand that the information on this form may be used for processing the claim which I previously signed."		
19	Insured's Signature	Insured: Signature of the insured (or insured's authorized representative), if applicable, after the actual use and after the Certification Form has been completed. If the landlord and tenant are both insured, the operator's (tenant's) certification can be used for both the landlord and operator.
20	Date	Insured: Date of signature by the insured (or insured's authorized representative).
21	□: Accepted □: Rejected □: Second Inspection	Adjuster: Acceptance, rejection, or second inspection as signified by a check mark in the corresponding box. If the Certification Form is rejected, refer to paragraph 722. A second field inspection is required for: (1) Destruction Verification when production is to be Destroyed due to ZMV/Zero PTC. (2) Special delayed claims to verify information reported.
22	Code No. and AIP Representative's Signature	Adjuster: Enter adjuster's code number and signature by the adjuster or AIP Claim supervisor who accepted, rejected, or did the inspection on the completed form.
23	Date	Adjuster: Date of signature by the adjuster or field representative.

Distribution: Unless otherwise instructed by the AIP distribute copies as follows:

(1) Original and one copy to the contract folder.
(2) One copy to the insured.

A. General Information

Refer to paragraph 722 for authorized crops and other information pertaining to self-certified replant claims.

The following items, numbers, and statements correspond to the completed example Self-Certification Replant Worksheet to illustrate how to complete all entries, except the last ten (10) items, which are not shown in this illustration.

Item #	Item Title	Completion Instructions
1	Company	AIP's name. (This can be a fill-in-entry or can be pre-printed on the form.)
2	Insured's name	Insured's name as shown on the most recent Policy Confirmation.
3	Policy No.	Policy number from the most recent Policy Confirmation
4	Crop	Crop to be replanted
5	Crop year	Crop year for this replant
6	Claim Number	Claim number assigned by the AIP.
7	Share	Insured's share to three decimal places. (If shares vary on same unit, all shares must be listed and the acreage associated with each share must be identified.)
8	Unit No.	Unit number from the AR.
9	FSA Farm/Tract/Field Number	FN for the replanted acreage.
10	Unit Acres	Total number of insurable acres in the unit.
11	Replanted Acres	Total number of replanted acres.
12	Legal Description	Legal description(s) where acreage is replanted.
13	Cause of damage	Insured cause of damage.
14	Date of Damage	Month plus the year, during which most of the insured damage occurred. Include the specific date where applicable.
15	Original Plant Date	Date acreage was originally planted.
16	Replant Date	Date acreage was replanted.
17	Field Diagram	Sketch of the field and replanted acreage (shaded as instructed on the worksheet.

B. Form Standards and Completion Instructions (Continued)

Item #	Item Title	Completion Instructions
18	Indicate the Practice/ Type Utilized (√)	Initial type/practice and the type/practice used for the replanted acreage. Indicate by placing a check mark by the applicable practice. Write in practice or type if not listed. Write in tillage method used for the original planting and tillage method used for the replanted acreage.
19	"My yield potential for acres to be replanted is_____ per acre.	Insured's estimate of yield potential per acre on acres to be replanted.
20	"Is damage on your farm similar to other farms in the area?" YES ___ "NO" __"	Mark "YES" or "NO" as indicated.
21	The following represent my actual replant costs as landlord____ tenant____ owner/operator____	Make no entry if crop is barley, buckwheat, corn, flax, grain sorghum, oats, peanuts, rye, soybeans, sunflowers, and wheat, but attach copies of receipts for replanting expenses actually incurred for the replanted acreage. Mark "landlord", "tenant", or "owner/operator" to indicate insured entity. Attach seed and fertilizer receipts, if applicable. Insured's total actual cost to replant the acreage. Only the dollar amount the insured paid or is liable for.
Required statement pre-printed directly above insured's signature block: Refer to the FCIC-DSSH (FCIC-24040) for the required statements.		
22	Insured's Signature and Date	Insured's signature and date, certifying to information on the worksheet.
23	Adjuster's Signature, Code No., and Date	Adjuster's (or authorized AIP employee's) signature, code number, and date (after reviewing and determining worksheet is correctly completed and crop acreage is eligible for a replanting payment.)

B. Form Standards and Completion Instructions (Continued)

General random review (audit) information.

(a) Items 24-31 of the worksheet are to be completed when a random review (audit) is done.

(b) Use a Special Report when there is not room in item 24 for documenting additional information or reasons for differences found during the review.

(c) As part of the random review, determine the unit acreage. If the determined acreage does not agree with what is on the worksheet, document this fact in item 24 or on a Special Report.

(d) Any information recorded on the Self-Certification Replant Worksheet or on the PW that is found to be incorrect, line through the incorrect information, enter the correct information, and have the insured initial the change. If you find it necessary or if instructed by the AIP, prepare a new PW and void the original.

Item #	Item Title	Completion Instructions
24	Reviewer Remarks	Enter information pertinent to audit. If additional room is needed, use a Special Report and write appropriately, "See attached (Title or number of form used for documentation purposes)." in item 24.
25	Reviewer Code/Date	Enter the reviewer code number and the date of review.
26	Actual/Replant Acres	Enter "OK" if you verify the field or subfield was initially planted timely and that the number of acres actually replanted agrees with the entry in item 11. If you verify that the number of acres do not agree with item 11, enter the correct number of acres replanted.
27	Date of Damage	Enter "OK" if you verify that the date of damage agrees with the entry in item 13. If you verify that the date of damage does not agree with the entry in item 14, determine the correct date and enter.
28	Cause of Damage	Enter "OK" if you verify that the cause of damage is insurable and agrees with the entry in item 13. If you verify that the entry does not agree with the entry in item 13, enter the cause of damage you have determined. If the cause of damage is not insurable, identify as such.
29	Replant Practice	Enter "OK" if you verify that the type or practice used for replanted acreage agrees with the entry in item 18. If you verify that the practice replanted does not agree with item 18, enter the practice you have determined.

B. Form Standards and Completion Instructions (Continued)

Item #	Item Title	Completion Instructions
30	Did acreage appear to qualify?	Enter "Yes" or "No" to indicate whether the acreage recorded in item 11 and 26 appears to qualify for the replanting payment. If you answered no, document why the acreage did not qualify for the replant payment in item 24 or on a Special Report.
31	Actual Cost	For barley, buckwheat, corn, flax, grain sorghum, oats, peanuts, rye, soybeans, sunflowers, and wheat: If receipts support the crop acreage has been replanted, enter "OK." For all other crops for which a self-certified replant payment can be paid: Enter "OK" after you have verified with the insured or insured's authorized representative that the total cost incurred by the insured for the replanting operation (without regard to crop share and substantiated by receipts) is the same as the entry in item 21. If you verify that the total cost incurred by the insured in item 21 does not agree with your determination, enter the total cost you have determined and explain the difference in item 24 or on a Special Report.

C. Distribution

(1) Preliminary Distribution

(a) Transmit partially completed original and two copies to the insured to be completed by the insured.

(b) Attach the completed original and copies (with receipts showing replanting costs) to all copies of the completed PW and transmit in accordance with instructions from your AIP.

(2) Final Distribution: After the Self-Certified Replant claim is approved for processing, the minimum distribution of the Self-Certified Replant Worksheet is as follows:

(a) Original attached to original claim to the office designated by the AIP to maintain insureds' file of original documents.

(b) One copy to the insured along with a legible copy of the claim.

Exhibit 9

Square Root Table

n	√n		N	√n		n	√n		n	√n
1	1.000		28	5.292		55	7.416		82	9.055
2	1.414		29	5.385		56	7.483		83	9.110
3	1.732		30	5.477		57	7.550		84	9.165
4	2.000		31	5.568		58	7.616		85	9.220
5	2.236		32	5.657		59	7.681		86	9.274
6	2.449		33	5.745		60	7.746		87	9.327
7	2.646		34	5.831		61	7.810		88	9.381
8	2.828		35	5.916		62	7.874		89	9.434
9	3.000		36	6.000		63	7.937		90	9.487
10	3.162		37	6.083		64	8.000		91	9.539
11	3.317		38	6.164		65	8.062		92	9.592
12	3.464		39	6.245		66	8.124		93	9.644
13	3.606		40	6.325		67	8.185		94	9.695
14	3.742		41	6.403		68	8.246		95	9.747
15	3.873		42	6.481		69	8.307		96	9.798
16	4.000		43	6.557		70	8.367		97	9.849
17	4.123		44	.633		71	8.426		98	9.899
18	4.243		45	6.708		72	8.485		99	9.950
19	4.359		46	6.782		73	8.544		100	10.000
20	4.472		47	6.856		74	8.602			
21	4.583		48	6.928		75	8.660			
22	4.690		49	7.000		76	8.718			
23	4.796		50	7.071		77	8.775			
24	4.899		51	7.141		78	8.832			
25	5.000		52	7.211		79	8.888			
26	5.099		53	7.280		80	8.944			
27	5.196		54	7.348		81	9.000			

Round Bin Conversion Chart: Converting Circumference To Diameter: Square Foot Factor Chart **Factor For Determining Gross Cubic Feet In Round Structures**						
Circumference (feet)	Diameter (feet)	Factor (sq. ft.)		Circumference (feet)	Diameter (feet)	Factor (sq. ft.)
18.7-19.0	6.0	28.3		26.6-26.8	8.5	56.8
19.1-19.3	6.1	29.2		26.9-27.1	8.6	58.1
19.4-19.6	6.2	30.2		27.2-27.4	8.7	59.5
19.7-19.9	6.3	31.2		27.5-27.8	8.8	60.8
20.0-20.2	6.4	32.2		27.9-28.1	8.9	62.2
20.3-20.5	6.5	33.2		28.2-28.4	9.0	63.6
20.6-20.8	6.6	34.2		28.5-28.7	9.1	65.0
20.9-21.2	6.7	35.3		28.8-29.0	9.2	66.4
21.3-21.5	6.8	36.3		29.1-29.3	9.3	67.9
21.6-21.8	6.9	37.4		29.4-29.6	9.4	69.4
21.9-22.1	7.0	38.5		29.7-30.0	9.5	70.9
22.2-22.4	7.1	39.6		30.1-30.3	9.6	72.4
22.5-22.7	7.2	40.7		30.4-30.6	9.7	73.9
22.8-23.0	7.3	41.9		30.7-30.9	9.8	75.4
23.1-23.4	7.4	43.0		31.0-31.2	9.9	77.0
23.5-23.7	7.5	44.2		31.3-31.5	10.0	78.5
23.8-24.0	7.6	45.4		31.6-31.8	10.1	80.1
24.1-24.3	7.7	46.6		31.9-32.2	10.2	81.7
24.4-24.6	7.8	47.8		32.3-32.5	10.3	83.3
24.7-24-9	7.9	49.0		32.6-32.8	10.4	85.0
25.0-25.2	8.0	50.3		32.9-33.1	10.5	86.6
25.3-25.6	8.1	51.5		33.2-33-4	10.6	88.3
25.7-25.9	8.2	52.8		33.5-33-7	10.7	89.9
26.0-26.2	8.3	54.1		33.8-34.0	10.8	91.6
26.3-26.5	8.4	55.4		34.1-34.4	10.9	93.3

Round Bin Conversion Chart: Converting Circumference To Diameter: Square Foot Factor Chart **Factor For Determining Gross Cubic Feet In Round Structures**						
Circumference (feet)	Diameter (feet)	Factor (sq. ft.)		Circumference (feet)	Diameter (feet)	Factor (sq. ft.)
34.5-34.7	11.0	95.0		42.3-42.5	13.5	143.2
34.8-35.0	11.1	96.8		42.6-42.8	13.6	145.3
35.1-35.3	11.2	98.5		42.9-43.1	13.7	147.4
35.4-35.6	11.3	100.3		43.2-43.5	13.8	149.5
35.7-35.9	11.4	102.1		43.6-43.8	13.9	151.7
36.0-36.2	11.5	103.9		43.9-44.1	14.0	153.9
36.3-36.5	11.6	105.7		44.2-44.4	14.1	156.1
36.6-36.9	11.7	107.5		44.5-44.7	14.2	158.3
37.0-37.2	11.8	109.3		44.8-45.0	14.3	160.6
37.3-37.5	11.9	111.2		45.1-45.3	14.4	162.9
37.6-37.8	12.0	113.1		45.4-45.7	14.5	165.2
37.9-38.1	12.1	115.0		45.8-46.0	14.6	167.4
38.2-38.4	12.2	116.9		46.1-46.3	14.7	169.7
38.5-38.7	12.3	118.8		46.4-46.6	14.8	172.0
38.8-39.1	12.4	120.8		46.7-46.9	14.9	174.4
39.2-39.4	12.5	122.8		47.0-47.2	15.0	176.7
39.5-39.7	12.6	124.7		47.3-47.5	15.1	179.1
39.8-40.0	12.7	126.7		47.6-47.9	15.2	181.4
40.1-40.3	12.8	128.6		48.0-48.2	15.3	183.9
40.4-40.6	12.9	130.7		48.3-48.5	15.4	186.3
40.7-40.9	13.0	132.7		48.6-48.8	15.5	188.7
41.0-41.3	13.1	134.8		48.9-49.1	15.6	191.2
41.4-41.6	13.2	136.8		49.2-49.4	15.7	193.6
41.7-41.9	13.3	138.9		49.5-49.7	15.8	196.0
42.0-42.2	13.4	141.1		49.8-50.1	15.9	198.5

Round Bin Conversion Chart: Converting Circumference To Diameter: Square Foot Factor Chart **Factor For Determining Gross Cubic Feet In Round Structures**						
Circumference (feet)	Diameter (feet)	Factor (sq. ft.)		Circumference (feet)	Diameter (feet)	Factor (sq. ft.)
50.2-50.4	16.0	201.1		58.0-58.2	18.5	268.8
50.5-50.7	16.1	203.6		58.3-58.5	18.6	271.7
50.8-51.0	16.2	206.1		58.6-58.9	18.7	274.7
51.1-51.3	16.3	208.7		59.0-59.2	18.8	277.6
51.4-51.6	16.4	211.3		59.3-59.5	18.9	280.5
51.7-51.9	16.5	213.9		59.6-59.8	19.0	283.5
52.0-52.3	16.6	216.5		59.9-60.1	19.1	286.5
52.4-52.6	16.7	219.0		60.2-60.4	19.2	289.5
52.7-52.9	16.8	221.6		60.5-60.7	19.3	292.6
53.0-53.2	16.9	224.3		60.8-61.1	19.4	295.6
53.3-53.5	17.0	227.0		61.2-61.4	19.5	298.7
53.6-53.8	17.1	229.7		61.5-61.7	19.6	301.8
53.9-54.1	17.2	232.3		61.8-62.0	19.7	304.8
54.2-54.5	17.3	235.1		62.1-62.3	19.8	307.9
54.6-54.8	17.4	237.8		62.4-62.6	19.9	311.0
54.9-55.1	17.5	240.6		62.7-62.9	20.0	314.2
55.2-55.4	17.6	243.3		63.0-63.3	20.1	317.3
55.5-55.7	17.7	246.1		63.4-63.6	20.2	320.4
55.8-56.0	17.8	248.8		63.7-63.9	20.3	323.7
56.1-56.3	17.9	251.6		64.0-64.2	20.4	326.9
56.4-56.7	18.0	254.5		64.3-64.5	20.5	330.1
56.8-57.0	18.1	257.3		64.6-64.8	20.6	333.3
57.1-57.3	18.2	260.1		64.9-65.1	20.7	336.5
57.4-57.6	18.3	263.0		65.2-65.5	20.8	339.8
57.7-57.9	18.4	265.9		65.6-65.8	20.9	343.1

Round Bin Conversion Chart: Converting Circumference To Diameter: Square Foot Factor Chart **Factor For Determining Gross Cubic Feet In Round Structures**						
Circumference (feet)	Diameter (feet)	Factor (sq. ft.)		Circumference (feet)	Diameter (feet)	Factor (sq. ft.)
65.9-66.1	21.0	346.4		73.7-73.9	23.5	433.8
66.2-66.4	21.1	349.7		74.0-74.2	23.6	437.5
66.5-66.7	21.2	353.0		74.3-74.6	23.7	441.2
66.8-67.0	21.3	356.3		74.7-74.9	23.8	444.9
67.1-67.3	21.4	359.7		75.0-75.2	23.9	448.6
67.4-67.7	21.5	363.1		75.3-75.5	24.0	452.4
67.8-68.0	21.6	366.5		75.6-75.8	24.1	456.2
68.1-68.3	21.7	369.8		75.9-76.1	24.2	459.9
68.4-68.6	21.8	373.2		76.2-76.4	24.3	463.8
68.7-68.9	21.9	376.7		76.5-76.8	24.4	467.6
69.0-69.2	22.0	380.1		76.9-77.1	24.5	471.5
69.3-69.5	22.1	383.6		77.2-77.4	24.6	475.3
69.6-69.9	22.2	387.0		77.5-77.7	24.7	479.2
70.0-70.2	22.3	390.6		77.8-78.0	24.8	483.0
70.3-70.5	22.4	394.1		78.1-78.3	24.9	486.9
70.6-70.8	22.5	397.6		78.4-78.6	25.0	490.9
70.9-71.1	22.6	401.2		78.7-79.0	25.1	494.8
71.2-71.4	22.7	404.7		79.1-79.3	25.2	498.7
71.5-71.7	22.8	408.3		79.4-79.6	25.3	502.7
71.8-72.0	22.9	411.9		79.7-79.9	25.4	506.7
72.1-72.4	23.0	415.5		80.0-80.2	25.5	510.7
72.5-72.7	23.1	419.1		80.3-80.5	25.6	514.8
72.8-73.0	23.2	422.7		80.6-80.8	25.7	518.8
73.1-73.3	23.3	426.4		80.9-81.2	25.8	522.8
73.4-73.6	23.4	430.1		81.3-81.5	25.9	526.8

Round Bin Conversion Chart: Converting Circumference To Diameter: Square Foot Factor Chart Factor For Determining Gross Cubic Feet In Round Structures						
Circumference (feet)	Diameter (feet)	Factor (sq. ft.)		Circumference (feet)	Diameter (feet)	Factor (sq. ft.)
81.6-81.8	26.0	530.9		89.4-89.6	28.5	638.0
81.9-82.1	26.1	535.0		89.7-90.0	28.6	642.5
82.2-82.4	26.2	539.1		90.1-90.3	28.7	646.9
82.5-82.7	26.3	543.3		90.4-90.6	28.8	651.4
82.8-83.0	26.4	547.4		90.7-90.9	28.9	656.0
83.1-83.4	26.5	551.6		91.0-91.2	29.0	660.5
83.5-83.7	26.6	555.7		91.3-91.5	29.1	665.1
83.8-84.0	26.7	559.9		91.6-91.8	29.2	669.6
84.1-84.3	26.8	564.1		91.9-92.2	29.3	674.3
84.4-84.6	26.9	568.3		92.3-92.5	29.4	678.9
84.7-84.9	27.0	572.6		92.6-92.8	29.5	683.5
85.0-85.2	27.1	576.8		92.9-93.1	29.6	688.2
85.3-85.6	27.2	581.0		93.2-93.4	29.7	692.8
85.7-85.9	27.3	585.4		93.5-93.7	29.8	697.4
86.0-86.2	27.4	589.7		93.8-94.0	29.9	702.1
86.3-86.5	27.5	594.0		94.1-94.4	30.0	706.9
86.6-86.8	27.6	598.3		94.5-94.7	30.1	711.6
86.9-87.1	27.7	602.6		94.8-95.0	30.2	716.3
87.2-87.4	27.8	607.0		95.1-95.3	30.3	721.1
87.5-87.8	27.9	611.4		95.4-95.6	30.4	725.8
87.9-88.1	28.0	615.8		95.7-95.9	30.5	730.6
88.2-88.4	28.1	620.2		96.0-96.2	30.6	735.4
88.5-88.7	28.2	624.6		96.3-96.6	30.7	740.2
88.8-89.0	28.3	629.0		96.7-96.9	30.8	745.1
89.1-89.3	28.4	633.5		97.0-97.2	30.9	749.9

Round Bin Conversion Chart: Converting Circumference To Diameter: Square Foot Factor Chart **Factor For Determining Gross Cubic Feet In Round Structures**						
Circumference (feet)	Diameter (feet)	Factor (sq. ft.)		Circumference (feet)	Diameter (feet)	Factor (sq. ft.)
97.3-97.5	31.0	754.8		105.1-105.4	33.5	881.4
97.6-97.8	31.1	759.6		105.5-105.7	33.6	886.7
97.9-98.1	31.2	764.5		105.8-106.0	33.7	892.0
98.2-98.4	31.3	769.4		106.1-106.3	33.8	897.3
98.5-98.8	31.4	774.4		106.4-106.6	33.9	902.6
98.9-99.1	31.5	779.3		106.7-106.9	34.0	907.9
99.2-99.4	31.6	784.3		107.0-107.2	34.1	913.3
99.5-99.7	31.7	789.2		107.3-107.5	34.2	918.6
99.8-100.0	31.8	794.2		107.6-107.9	34.3	924.0
100.1-100.3	31.9	799.2		108.0-108.2	34.4	929.4
100.4-100.6	32.0	804.2		108.3-108.5	34.5	934.8
100.7-101.0	32.1	809.3		108.6-108.8	34.6	940.2
101.1-101.3	32.2	814.3		108.9-109.1	34.7	945.7
101.4-101.6	32.3	819.4		109.2-109.4	34.8	951.1
101.7-101.9	32.4	824.5		109.5-109.7	34.9	956.6
102.0-102.2	32.5	829.6		109.8-110.1	35.0	962.1
102.3-102.5	32.6	834.7		110.2-110.4	35.1	967.6
102.6-102.8	32.7	839.8		110.5-110.7	35.2	973.1
102.9-103.2	32.8	845.0		110.8-111.0	35.3	978.7
103.3-103.5	32.9	850.1		111.1-111.3	35.4	984.2
103.6-103.8	33.0	855.3		111.4-111.6	35.5	989.8
103.9-104.1	33.1	860.5		111.7-111.9	35.6	995.4
104.2-104.4	33.2	865.7		112.0-112.3	35.7	1001.0
104.5-104.7	33.3	870.9		112.4-112.6	35.8	1006.6
104.8-105.0	33.4	876.2		112.7-112.9	35.9	1012.2

Round Bin Conversion Chart: Converting Circumference To Diameter: Square Foot Factor Chart Factor For Determining Gross Cubic Feet In Round Structures						
Circumference (feet)	Diameter (feet)	Factor (sq. ft.)		Circumference (feet)	Diameter (feet)	Factor (sq. ft.)
113.0-113.2	36.0	1017.9		120.8-121.1	38.5	1164.2
113.3-113.5	36.1	1023.5		121.2-121.4	38.6	1170.2
113.6-113.8	36.2	1029.2		121.5-121.7	38.7	1176.3
113.9-114.1	36.3	1034.9		121.8-122.0	38.8	1182.4
114.2-114.5	36.4	1040.6		122.1-122.3	38.9	1188.5
114.6-114.8	36.5	1046.3		122.4-122.6	39.0	1194.6
114.9-115.1	36.6	1052.1		122.7-122.9	39.1	1200.7
115.2-115.4	36.7	1057.8		123.0-123.3	39.2	1206.9
115.5-115.7	36.8	1063.6		123.4-123.6	39.3	1213.0
115.8-116.0	36.9	1069.4		123.7-123.9	39.4	1219.2
116.1-116.3	37.0	1075.2		124.0-124.2	39.5	1225.4
116.4-116.7	37.1	1081.0		124.3-124.5	39.6	1231.6
116.8-117.0	37.2	1086.9		124.6-124.8	39.7	1237.9
117.1-117.3	37.3	1092.7		124.9-125.1	39.8	1244.1
117.4-117.6	37.4	1098.6		125.2-125.5	39.9	1250.4
117.7-117.9	37.5	1104.5		125.6-125.8	40.0	1256.6
118.0-118.2	37.6	1110.4		125.9-126.1	40.1	1262.9
118.3-118.5	37.7	1116.3		126.2-126.4	40.2	1269.2
118.6-118.9	37.8	1122.2		126.5-126.7	40.3	1275.6
119.0-119.2	37.9	1128.2		126.8-127.0	40.4	1281.9
119.3-119.5	38.0	1134.1		127.1-127.3	40.5	1288.3
119.6-119.8	38.1	1140.1		127.4-127.7	40.6	1294.6
119.9-120.1	38.2	1146.1		127.8-128.0	40.7	1301.0
120.2-120.4	38.3	1152.1		128.1-128.3	40.8	1307.4
120.5-120.7	38.4	1158.1		128.4-128.6	40.9	1313.8

Round Bin Conversion Chart: Converting Circumference To Diameter: Square Foot Factor Chart Factor For Determining Gross Cubic Feet In Round Structures						
Circumference (feet)	Diameter (feet)	Factor (sq. ft.)		Circumference (feet)	Diameter (feet)	Factor (sq. ft.)
128.7-128.9	41.0	1320.3		136.6-136.8	43.5	1486.2
129.0-129.2	41.1	1326.7		136.9-137.1	43.6	1493.0
129.3-129.5	41.2	1333.2		137.2-137.4	43.7	1499.9
129.6-129.9	41.3	1339.6		137.5-137.7	43.8	1506.7
130.0-130.2	41.4	1346.1		137.8-138.0	43.9	1513.6
130.3-130.5	41.5	1352.7		138.1-138.3	44.0	1520.5
130.6-130.8	41.6	1359.2		138.4-138.6	44.1	1527.5
130.9-131.1	41.7	1365.7		138.7-139.0	44.2	1534.4
131.2-131.4	41.8	1372.3		139.1-139.3	44.3	1541.3
131.5-131.7	41.9	1378.9		139.4-139.6	44.4	1548.3
131.8-132.1	42.0	1385.4		139.7-139.9	44.5	1555.3
132.2-132.4	42.1	1392.0		140.0-140.2	44.6	1562.3
132.5-132.7	42.2	1398.7		140.3-140.5	44.7	1569.3
132.8-133.0	42.3	1405.3		140.6-140.8	44.8	1576.3
133.1-133.3	42.4	1412.0		140.9-141.1	44.9	1583.4
133.4-133.6	42.5	1418.6		141.2-141.5	45.0	1590.4
133.7-133.9	42.6	1425.3		141.6-141.8	45.1	1597.5
134.0-134.3	42.7	1432.0		141.9-142.1	45.2	1604.6
134.4-134.6	42.8	1438.7		142.2-142.4	45.3	1611.7
134.7-134.9	42.9	1445.5		142.5-142.7	45.4	1618.8
135.0-135.2	43.0	1452.2		142.8-143.0	45.5	1626.0
135.3-135.5	43.1	1459.0		143.1-143.3	45.6	1633.1
135.6-135.8	43.2	1465.7		143.4-143.7	45.7	1640.3
135.9-136.1	43.3	1472.5		143.8-144.0	45.8	1647.5
136.2-136.5	43.4	1479.3		144.1-144.3	45.9	1654.7

Round Bin Conversion Chart: Converting Circumference To Diameter: Square Foot Factor Chart Factor For Determining Gross Cubic Feet In Round Structures						
Circumference (feet)	Diameter (feet)	Factor (sq. ft.)		Circumference (feet)	Diameter (feet)	Factor (sq. ft.)
144.4-144.6	46.0	1661.9		152.2-152.5	48.5	1847.5
144.7-144.9	46.1	1669.1		152.6-152.8	48.6	1855.1
145.0-145.2	46.2	1676.4		152.9-153.1	48.7	1862.7
145.3-145.6	46.3	1683.7		153.2-153.4	48.8	1870.4
145.7-145.9	46.4	1690.9		153.5-153.7	48.9	1878.1
146.0-146.2	46.5	1698.2		153.8-154.0	49.0	1885.7
146.3-146.5	46.6	1705.5		154.1-154.4	49.1	1893.5
146.6-146.8	46.7	1712.9		154.5-154.7	49.2	1901.2
146.9-147.1	46.8	1720.2		154.8-155.0	49.3	1908.9
147.2-147.4	46.9	1727.6		155.1-155.3	49.4	1916.7
147.5-147.8	47.0	1734.9		155.4-155.6	49.5	1924.4
147.9-148.1	47.1	1742.3		155.7-155.9	49.6	1932.2
148.2-148.4	47.2	1749.7		156.0-156.2	49.7	1940.0
148.5-148.7	47.3	1757.2		156.3-156.6	49.8	1947.8
148.8-149.0	47.4	1764.6		156.7-156.9	49.9	1955.7
149.1-149.3	47.5	1772.1		157.0-157.2	50.0	1963.5
149.4-149.6	47.6	1779.5				
149.7-150.0	47.7	1787.0				
150.1-150.3	47.8	1794.5				
150.4-150.6	47.9	1802.0				
150.7-150.9	48.0	1809.6				
151.0-151.2	48.1	1817.1				
151.3-151.5	48.2	1824.7				
151.6-151.8	48.3	1832.3				
151.9-152.1	48.4	1839.8				

A. General Information

(1) The following provides the standards for a notice for PP and NOL for planted acres. It also provides the form standards for a Notice of PP or NOL form if a form is utilized to record the notices.

(2) A separate Notice of PP Form may be used rather than combining with the NOL Form for planted crops. However, the statements in subparagraph B and the following items listed in subparagraph C below are required for Items (1)-(10), (13)-(18), (20)-(21), and (23)-(28).

B. Required Statements and Other General Form Requirements

The Privacy Act and Non-Discrimination statements are required statements that must be printed on the form or provided as a separate document. These statements are not shown in the example form in this exhibit. The current Non-Discrimination Statement and Privacy Act Statement can be found on the RMA website at: www.rma.usda.gov. For additional signature and distribution requirements for these statements, refer to the DSSH. Also, refer to the DSSH for other requirements general to all forms; e.g., point size of font, submission requirements for forms approval, etc.

C. Insured's Notice of Loss

(1) The insured can provide notice via telephone, e-mail, postal service, fax, in person, or by using a NOL form as described in subparagraph D below. If the agent/AIP receives the notice from the insured by phone or e-mail and documents such notice on a phone log, PW, claims log, claim registry, automated notice system to open claims, etc., the policy requirement for confirming the NOL in writing will be considered fulfilled (refer to paragraph 401).

(2) However, if the NOL is not recorded on a form, the following is required:

(a) A title that identifies that this is NOL information, and

(b) For notices for planted acres or PP, the information for the items identified as "(substantive)," excluding items 28-29, in subparagraph D below.

(3) The notice form or the required notice information must be retained in the insured's file folder or in the AIP electronic database or electronic files retained for the insured.

D. Notice of Prevented Planting or Loss Standards

Following are the minimum items that are required (identified as substantive) for a Notice of Prevented Planting or Damage or Loss form or other notice submitted and recorded on other than a form:

(1) Title of Form: "Notice of Prevented Planting or Loss"

Note: If the AIP chooses to make these separate forms, then use the title "Notice of Prevented Planting" for the PP Notice, and "Notice of Loss" for planted acres.

(2) All of the following completion instructions are "Substantive" (required). However, these form instructions do not illustrate all required entry items. Refer to the DSSH.

Section I: General Information	
Element/Item Number	**Description**
1. Insured's Name	Name of the insured that identifies exactly the person (legal entity) to whom the policy is issued.
2. Insured's Address	Insured's street and/or mailing address.
3. Insured's City & State	Insured's city and state for mailing address.
4. Insured's Zip Code	Insured's zip code for mailing address.
5. Insured's Telephone Number	Insured's telephone number.
6. Best Time to Contact Insured	Insert time (am/pm).
7. Policy Number	Insured's assigned policy number.
8. Claim Number	Claim number as assigned by the AIP.
9. Agent's Name	Name of the agent.
10. Agent's Address	Agent's street and/or mailing address.
11. Agent's City & State	Agent's city and state for mailing address.
12. Agent's Zip Code	Agent's zip code for mailing address.
13. Agent's Telephone Number	Agent's telephone number.
Section II: Crop Information	
14. Crop Year	Four-digit crop year as defined in the policy, for which notice will be filed.
15. Crop/Code #	Crop name and four-digit crop code number.
16. Unit Number	Unit number from the Summary of Coverage after it is verified to be correct.
17. Acres	Acres to tenths. Account for all planted acreage in the unit.
18. Legal Description	Land location that identifies the legal description, if available, and the location of the unit (e.g., section, township, and range; FSA Farm Numbers; FSA CLU and tract numbers; GPS identification, or grid identifications) as applicable for the crop.

D. Notice of Prevented Planting or Damage or Loss Standards (continued)

Element/Item Number	Description
19. Date of Damage	First three letters of the month(s) during which the determined insured damage occurred for the inspection and cause(s) of damage listed in item 20 below. For progressive damage, enter in chronological order the month that identifies when the majority of the insured damage occurred. Include the specific date where applicable as in the case of hail damage (e.g., Aug 11). Enter additional dates of damage, as needed. If more space is needed, document the additional dates of damage on a Special Report.
20. Cause of Damage	Name of the determined insured cause(s) of damage for this crop as listed in the LAM for the date of damage listed in item 19 above. If an insured cause(s) of damage is coded as "Other," explain on a Special Report. Enter additional causes of damage, as needed. If more space is needed, document the additional determined insured causes of damage on a Special Report.
21. Estimated Production	Estimated yield per acre, rounded to whole number.
22. Expected Harvest Date	Date of expected harvest.
Section III: Notice Information	
Include the following instruction: "Refer to the applicable Basic Provision or Crop Provisions for more information regarding damage or loss notice reporting requirements."	
23. This is a notice of: (Check One)	☐ "Damage Only: At this time, it appears that the damage will exceed the guarantee." ☐ "Probable Loss" ☐ "Immediate Inspection Requested. If checked, explain why in the comments section" ☐ "Prevented Planting"
24. "If you have less than 100% share, is the other share insured under a Federal crop insurance program? If so, list the person's name, AIP, and policy number, if known."	
25. Insured Intends to: (Check One)	Notice of Loss: ☐ (1) "Harvest" ☐ (2) "To Chop/Silage" ☐ (3) "Leave for Cover" ☐ (4) "Destroy" ☐ (5) "Plant to Another Crop" ☐ (6) "Pasture" ☐ (7) "Hay" ☐ (8) "Direct Market Crop" ☐ (9) "Replant" ☐ (10) "Unknown" ☐ (11) "Other, explain in the comments section" Notice of Prevented Planting: ☐ (1) "Plant to Cover Crop" ☐ (2) "Destroy" ☐ (3) "Plant to Another Crop" ☐ (4) "Graze (November 1 or later)" ☐ (5) "Hay (November 1 or later)" ☐ (6) "Unknown" ☐ (7) "Other, explain in the comments section"

D. Notice of Prevented Planting or Damage or Loss Standards (continued)

Element/Item Number	Description
26. "If the Insured intends to replant and a replanting payment is applicable, is the acreage greater than 50 acres of the unit? Yes □ No □ (Check One)"	
27. "I request authorization to commingle production from two or more units or commingle production between insured and uninsured acreage within the same structure and to use my load records, structure markings, or combine monitor records to determine production between units or production from insured/uninsured acreage. Do you agree to follow your insurance provider's written criteria and instructions to do this? Yes □ No □ (Check One)"	
28. Insured's Signature & Date	Insured's (or insured's authorized representative's) signature and date. Before obtaining the signature, review all entries on the notice with the insured, (or insured's authorized representative) particularly explaining codes, etc., that may not be readily understood.
29. Agent's Signature, Code Number, & Date	Signature of agent, code number, and date signed after the insured (or insured's authorized representative) has signed.

For all crops except for Raisins, Nursery, and Florida Fruit Trees.

FOR ILLUSTRATION PURPOSES ONLY

PRODUCTION WORKSHEET

Continuation Sheet – Harvested Production

FORM NO. XXXX

1. Crop/Code#	2. Unit #

7. Company _____ 8. Name of Insured _____

Agency _____ 9. Claim # _____ 11. Crop Year _____

10. Policy # _____

SECTION II – DETERMINED HARVESTED PRODUCTION

A. MEASUREMENTS						B. GROSS PRODUCTION				C. ADJUSTMENTS TO HARVESTED PRODUCTION									
47a. / 47b.	48.	49.	50.	51.	52.	53.	54.	55.	56.	57.	58a. / 58b.	59a. / 59b.	60a. / 60b.	61.	62.	63.	64a. / 64b.	65.	66.
Share / Field ID	Multi-Crop Code	Length or Diameter	Width	Depth	Deduc-tion	Net Cubic Feet	Conver-sion Factor	Gross Prod.	Bu. Ton Lbs. Cwt.	Shell/ Sugar Factor	FM% / Factor	Moisture % / Factor	Test Wt. / Factor	Adjusted Production	Prod. Not to Count	Production Pre-QA	Value / MKT. Price	Quality Factor	Production To Count

FGIS (or Applicable State or Other Entity) Definitions for FM & Dockage

Crop	FGIS Dockage Definition (State definition, as specified). Conspicuous Admixture or Admixture, if applicable.	FGIS FM Definition (State or other entity, as specified)
Barley	**Dockage**: All matter other than barley that can be removed from the original sample by use of an approved device according to procedures prescribed in FGIS instructions. Also, underdeveloped, shriveled, and small pieces of barley kernels removed in properly separating the material other than barley and that cannot be recovered by properly rescreening or recleaning.	**FM**: All matter other than barley, other grains and wild oats that remains in the sample after removal of dockage.
Canola/ Rapeseed	**Dockage**: All matter other than canola that can be removed from the original sample by use of an approved device according to procedures prescribed in FGIS instructions. Also, underdeveloped, shriveled, and small pieces of canola kernels that cannot be recovered by properly rescreening or recleaning. Machine separated dockage is added to conspicuous admixture in the computation of total dockage **Conspicuous admixture**: All matter other than canola including, but not limited to ergot sclerotinia, and stones, which is conspicuous and readily distinguishable from canola and which remains in the sample after the removal of machine separated dockage. Conspicuous admixture is added to machine separated dockage in the computation of total dockage.	**FM**: No definition (N/A).
Corn	**Dockage**: No definition (N/A)	**FM**: All matter that passes readily through a 6/64 round-hole sieve and all matter other than corn that remains on top of the 12/64 round-hole sieve according to procedures prescribed in FGIS instructions.
Dry Beans	**Dockage**: N/A to grade – FGIS does not perform a dockage test unless requested.	**FM**: Stones, dirt, weed seeds, cereal grains, lentils, peas, and all matter other than beans.

Crop	FGIS Dockage Definition (State definition, as specified). Conspicuous Admixture or Admixture, if applicable.	FGIS FM Definition (State or other entity, as specified)
Dry Peas	**Dockage**: Small, underdeveloped dry peas, pieces of dry peas, and all matter other than dry peas, which can be removed readily by the use of an approved device in accordance with procedures prescribed in the Pea and Lentil Handbook and the Equipment Handbook. For the purpose of this paragraph, "approved device" shall include sieves as set forth in item (q) of this section and any other equipment that is approved by the Administrator as giving equivalent results.	**FM in dockage-free dry peas**: All matter other than dry peas and including detached seedcoats. **FM in thresher-run dry peas**: All matter other than dry peas, including detached seedcoats, which cannot be readily removed in the determination of dockage.
Flax	**Dockage**: All matter other than flaxseed that can be removed from the original sample by use of an approved device according to procedures prescribed in FGIS instructions. Also, underdeveloped, shriveled, and small pieces of flaxseed kernels removed in properly separating the material other than flaxseed and that cannot be recovered by properly rescreening or recleaning. There are no definitions for stones, admixture, or conspicuous admixture.	**FM**: No definition (N/A).
Millet	**Dockage**: No definition (N/A)	**FM**: All matter other than millet seed that you can remove from the original sample by use of an approved device according to procedures prescribed in the FGIS instructions. FM is also underdeveloped, shriveled, and small pieces of millet kernels removed in properly separating the material other than millet seed and which cannot be recovered by properly rescreening or recleaning and includes detached millet hulls.

Crop	FGIS Dockage Definition (State definition, as specified). Conspicuous Admixture or Admixture, if applicable.	FGIS FM Definition (State or other entity, as specified)
Mustard	**Dockage (As defined by State Standards in which the mustard is insured or as provided by the FGIS)**: All matter removed from the sample using the required standard method of dockage determination. Dockage is reported in percent and added to and made a part of the grade designation after subclass.	**FM**: **(As defined by State Standards in which the mustard is insured or as provided by the FGIS):** All material other than mustard seed of the four subclasses after the removal of dockage (includes weed seeds, other grains, earth pellets or stones, sclerotinia, trash, etc.). This total FM is composed of: a) A combination of seeds of cockle (Lychnis spp.), wild mustard (Brassica Kaber), and rapeseed (Brassica campestris and B napus); b) Other weed seeds than those subdivision a: and c) All matter other than mustard or weed seeds of subdivisions a) and b).
Oats	**Dockage**: No definition (N/A)	**FM**: All matter other than oats, wild oats, and other grains.
Popcorn	**Dockage**: No definition (N/A)	**FM**: All matter other than popcorn
Rice	**Dockage**: No definition (N/A)	**FM**: No definition (N/A)
Rye	**Dockage**: All matter other than rye that can be removed from the original sample by use of an approved device in accordance with procedures prescribed in FGIS instructions. Also, underdeveloped, shriveled, and small pieces of rye kernels removed in properly separating the material other than rye and that cannot be recovered by properly rescreening and recleaning.	**FM**: All matter other than rye that remains in the sample after the removal of dockage.
Safflowers	**Dockage**: All material other than whole safflower seed that can be easily removed with a cleaning device and by handpicking and also includes underdeveloped, shriveled, and small pieces of safflower seed that cannot be recovered by properly recleaning. There are no definitions for admixture, conspicuous admixture, or stones.	**FM**: No definition (N/A)

Crop	FGIS Dockage Definition (State definition, as specified). Conspicuous Admixture or Admixture, if applicable.	FGIS FM Definition (State or other entity, as specified)
Sorghum, Grain	**Dockage**: All matter other than sorghum that can be removed from the original sample by use of an approved device according to procedures prescribed in FGIS instructions. Also, underdeveloped, shriveled, and small pieces of sorghum kernels removed in properly separating the material other than sorghum.	**FM**: All matter, except sorghum, which passes over the number 6 riddle and all matter other than sorghum that remains on the top of the 5/64 triangular-hole sieve according to procedures prescribed in FGIS instructions.
Soybeans	**Dockage**: No definition (N/A)	**FM**: All matter that passes through an 8/64 round-hole sieve and all matter other than soybeans remaining in the sieved sample after sieving according to procedures prescribed in FGIS instructions.
Sunflower Seed Non-Oil (Confec-tionary)	**Dockage**: All material other than whole confectionary sunflower seeds containing kernels that you can remove by using handsieving and by handpicking a portion of the sample. **Admixture**: Consists of all material other than confectionary sunflower seed which you can remove from a test portion by handsieving and handpicking. Consider empty hulls and part of seed as confectionary sunflower seed. The major difference between admixture and dockage is that hulls and pieces of hulls are not included in admixture. Consequently, the percentage of admixture is lower than the percentage of dockage. There are no definitions for conspicuous admixture or stones.	**FM**: No definition (N/A)

Crop	FGIS Dockage Definition (State definition, as specified). Conspicuous Admixture or Admixture, if applicable.	FGIS FM Definition (State or other entity, as specified)
Sunflower Seed – Oil	**Dockage**: No definition (N/A)	**FM**: All matter other than whole sunflower seeds containing kernels that can be removed from the original sample by use of an approved device and by handpicking a portion of the sample according to procedures prescribed in FGIS instructions.
Wheat	**Dockage**: All matter other than wheat that can be removed from the original sample by use of an approved device according to procedures prescribed in FGIS instructions. Also, underdeveloped, shriveled, and small pieces of wheat kernels removed in properly separating the material other than wheat and that cannot be recovered by properly rescreening or recleaning.	**FM**: All matter other than wheat that remains in the sample after the removal of dockage and shrunken and broken kernels.

Calculation Sequence of Liability Adjustment Factor & 1st/2nd Crop Reduction

A. General Information

(1) Refer to paragraph 501 for information on LAF, and the GSH for the definition of LAF.
(2) Refer to paragraph 601 for information on 1st/2nd Crop Reduction.
(3) The liability used to determine the LAF for a replanting payment, PP payment, and an indemnity payment is a separate liability for each type of payment and is determined on a line-by-line basis on the PW. The same LAF would not apply to all indemnity payment calculations (i.e., the liability for a replanting payment, a PP payment, and an indemnity payment with the same unit number are not combined). They are kept separate in the same manner that each payment type is a separate payment.

B. Calculation Sequence of LAF and 1st/2nd Crop Reduction

(1) Indemnity Payment

Step 1: **YP & RP**
GPA[2/] X Projected Price or Harvest Price Amount X Determined Acreage X LAF = Loss Guarantee Amount

Other applicable crops under the BP
Acre Stage Guarantee Amount[1/] X Price Election X Determined Acreage X LAF = Loss Guarantee Amount.

Step 2: **YP & RP**
PTC Quantity X Price Election or Harvest Price Amount = Revenue Conversion PTC

Step 3: **YP & RP**
Loss Guarantee Amount – Revenue Conversion PTC = Unit Deficiency Quantity

Other applicable crops under the BP
Loss Guarantee Amount minus PTC Quantity = Production Loss (Unit Deficiency Quantity).

Step 4: **YP & RP**
Unit Deficiency Quantity X Insured Share Percent = Preliminary Indemnity Amount

Other applicable crops under the BP
Unit Deficiency Quantity X Price Election Amount X Stage Price Percent Factor[2/], if applicable X Insured Share Percent = Preliminary Indemnity Amount.

Step 5: Preliminary Indemnity Amount X Multi-crop Adjustment Factor, if applicable = Indemnity Amount.

[1/] If a Guarantee Adjustment Factor is applicable, the Acre Stage Guarantee Amount (or GPA[2/]) is GPA X Guarantee Adjustment Factor; e.g., Guarantee Adjustment Factor would be for late planted, PP acres, and is also applicable for a particular crop such as strawberries. Refer to Appendix III (M-13 Handbook) for applicable calculation for the Acre Stage Guarantee Amount (or GPA[2/]) for the applicable crop.

[2/] Refer to Appendix III/M-13 Handbook to determine whether a Stage Price Percent Factor applies.

(2) Replant Payment

Step 1: Lesser of twenty percent (20%) of the GPA, the Maximum Replant GPA, or the actual cost per acre on applicable crops (as stated in the CP) = Acre Stage Guarantee Amount.

Step 2: Acre Stage Guarantee Amount X Determined Acreage Replanted X [2/]LAF = Loss Guarantee Amount.

Step 3: Loss Guarantee Amount X Projected Price or Price Election Amount X Insured Share Percent = Replant Payment Amount.

(3) Prevented Planting Payment

Step 1: Acre Stage Guarantee for timely planted acres[1/] X Guarantee Adjustment Factor[2/]; X Determined Acreage X LAF = PP Loss Guarantee Amount.

Step 2: Loss Guarantee Amount X Projected Price or Price Election Amount X Insured Share Percent = Preliminary PP Payment Amount.

Step 3: Preliminary PP Payment Amount X Multi-crop Adjustment Factor = PP Payment Amount

[1/] Acres Stage Guarantee for timely planted acres = Approved Yield X PP Coverage Level.

[2/] For PP, the Guarantee Adjustment Factor is the PP coverage for the crop (inclusive of the +5 or +10 option, if elected by insured); e.g., Sixty percent (60%) for wheat, converted to a 2 point decimal (.60) and with +5 option = .65 and with +10 option = .70).

Generally, determined perennial crop acres are based on land acres. However, for certain situations perennial crop acres may be determined using tree/vine/bush plantings. Refer to subparagraph 821G.

The symbols (☼, x, etc.) in the planting pattern diagrams herein, represent a single tree/vine/bush. Planting pattern diagrams and number of trees/vines/bushes contained herein are for illustration purposes only and are not to scale.

A. Square Or Rectangle Planting Patterns

(1) Trees/vines/bushes planted in a square or rectangle pattern (see diagram below).

Square Planting Pattern

	1	☼	☼	☼	☼	☼	☼
Row	2	☼	☼	☼	☼	☼	☼
	3	☼	☼	☼	☼	☼	☼
	4	☼	☼	☼	☼	☼	☼

(2) Calculate the number of trees/vines/bushes per acre by multiplying the average distance between trees/vines/bushes (L) by the average distance between tree/vine/bush rows (W) and divide this product into 43,560 sq. ft./acre using the formula below.

Number of Trees per Acre Formula:
43,560 sq. ft./acre ÷ (L x W) = trees/vines/bushes per acre (T)

Example: 43,560 sq. ft./acre ÷ (20.0 ft. x 20.0 ft.) = 108.9 rounded to 109 trees/acre.

(3) Count the actual number of trees in the orchard (N) and divide this amount by the number of trees/acre (T) to calculate acreage using the formula below.

Orchard Acreage Formula:
N ÷ T = A

Example: 42 ÷ 109 = 0.385 rounded to 0.4 acres.

B. Hedgerow or Border Planting Pattern

(1) Trees/vines/bushes planted in a hedgerow or border pattern (see diagram below).

Hedgerow or Border Planting Pattern

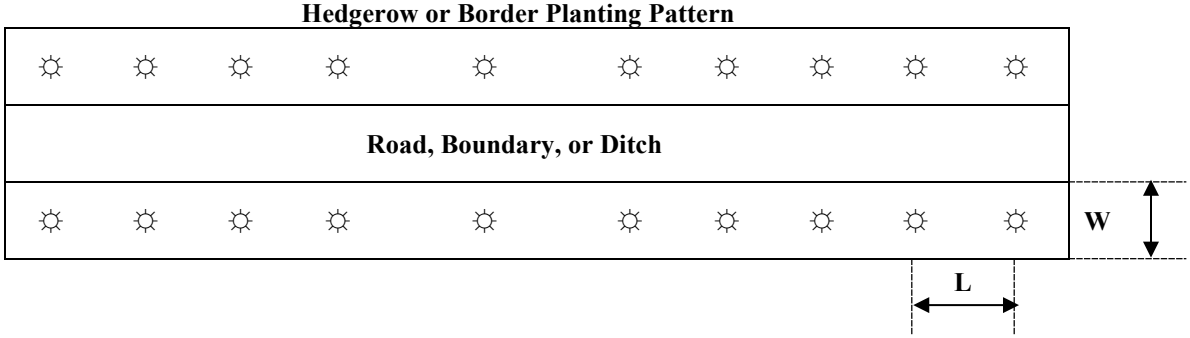

(2) If the trees/vines/bushes are planted along a road, boundary or ditch row, use (L) to designate the average tree spacing and (W) to designate the average row width in feet not to exceed the distance from the center of the tree to the middle of the road, boundary, or ditch). If there are a total of 20 trees planted in the row that are planted 20.0 feet apart and the row is 20.0 feet wide, calculate the trees/vines/bushes per acre using the formula below.

<u>Hedgerow or Border Trees/Vines/Bushes per Acre Formula</u>:
43,560 ÷ (L x W) = trees/vines/bushes per acre (T).

Example: 43,560 ÷ (20.0 ft. x 20.0 ft.) = 108.9 rounded to 109 trees per acre.

(3) Divide the total number of trees counted in a single row (R) by the trees per acre (T). Calculate acreage occupied by this row of trees using the formula below.

<u>Acreage Occupied by a Row of Trees/Vines/Bushes Formula:</u>
R ÷ T = acres

Example: 20 ÷ 109 = 0.18 rounded to 0.2 acres. If two or more rows, multiply result by the number of rows.

C. Hexagonal/Quincunx Planting Patterns

(1) Trees/vines/bushes planted in a hexagonal/quincunx pattern (see diagram below).

Quincunx/Hexagonal Planting Patterns

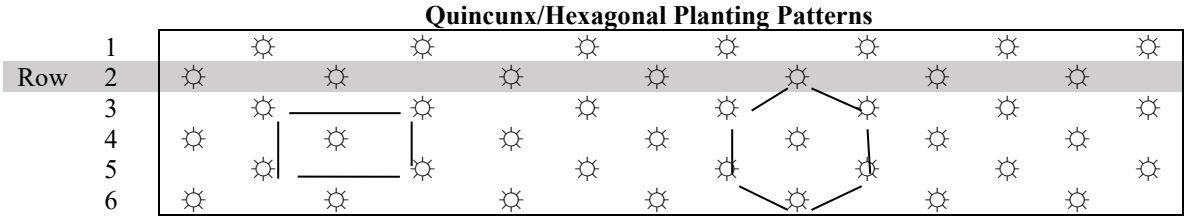

C. Hexagonal/Quincunx Planting Patterns (continued)

(2) A quincunx planting pattern is defined as trees/vines/bushes planted in corners of a rectangle with one tree in the middle of the rectangle (illustrated on the left above). A hexagonal planting pattern is defined as six adjoining trees/vines/bushes planted equidistant from any one plant in the orchard (illustrated on the right above).

(3) For hexagonal/quincunx planting patterns, double the number of trees per acre for a square pattern from the trees per acre chart. For example, for a 20.0 ft. x 20.0 ft. planting pattern from the chart, doubled is 218 trees per acre, or calculate trees per acre by multiplying the distance between trees (L), times the distance between rows (W), (i.e., distance between highlighted trees in the above diagram) and divide this product into 87,120 using the formula below.

Formula:
87,120 ÷ (L x W) = trees/vines/bushes per acre (T)

Example: 87,120 ÷ (20.0 ft. x 20.0 ft.) = 217.8 rounded to 218 trees/acre.

(4) Count the actual number of trees in the orchard (N) and divide this amount by the number of trees/acre (T) to calculate acreage using the formula below.

Orchard Acreage Formula:
N ÷ T = A

Example: 435 ÷ 218 = 1.995 rounded to 2.0 acres.

D. Double Row Planting Pattern

(1) Tree/vines/bushes planted in a double row pattern (see diagram below).

Double Row Planting Pattern

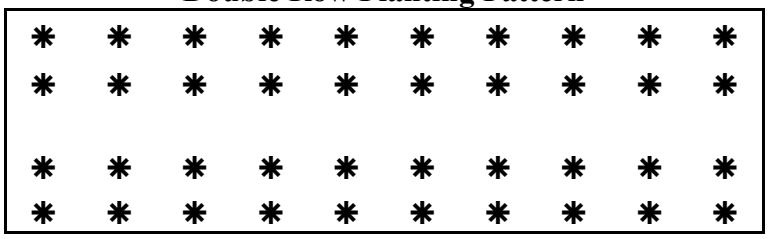

(2) Calculate the number of trees per acre by counting the actual number of trees in each row (T). Next, count the number of rows (R). Calculate the number of trees (N) in the orchard using the following formula:

Number of Trees in Orchard Formula:
T x R = N
Example: 22 x 14 = 308

D. Double Row Planting Pattern (continued)

(3) Measure the length (L) and width (W) of the orchard boundary in accordance with subparagraph 821G. Calculate the number of square feet in the orchard using the following formula:

Square Feet per Orchard Formula:
L x W = square feet/orchard

Example: 240.0 ft. x 200.0 ft. = 48,000 sq. ft.

(4) Calculate acreage (A) using the following formula:

Acreage Formula:
Square Feet per Orchard ÷ 43,560 (sq. ft. per acre) = (A)

Example: 48,000 sq. ft. ÷ 43,560 sq. ft. = 1.102 acres rounded to 1.1 acres

(5) Calculate the number of trees per acre using the following formula:

Trees per Acre Formula:
Number of trees in orchard ÷ Acreage = Trees/Acre

Example: 308 ÷ 1.1 = 280 trees/acre

E. Interplanted Crop Planting Pattern

(1) Two separate tree/vine/bush crops interplanted in the same orchard (see diagram below).

Orchard Dimensions: 320.0 ft. L x 80.0 ft. W

A	P	A	P	A	P	A	P	A	P	A	P	A	P	A
P	A	P	A	P	A	P	A		A	P	A	P	A	P
A	P	A		A	P	A	P	A	P	A	P	A	P	A
P	A	P	A	P	A		A	P	A	P	A	P	A	P

Actual tree counts: A = 30 Apple trees, P = 27 Pear trees, 3 missing Pear trees

(2) Calculate the orchard acreage as follows. Orchard boundary extends 10.0 ft. beyond the outside rows and 10.0 ft. beyond the ends. The dimensions of the orchard boundary are 320.0 ft. L x 80.0 ft. W; calculate acres using the following formula.

Orchard Acreage Formula:
(L x W) ÷ 43,560 sq. ft./acre
Example: 25,600.0 sq. ft. ÷ 43,560.0 sq. ft./acre = 0.588 rounded to 0.6 acres.

E. Interplanted Crop Planting Pattern (continued)

(3) Calculate percent of each tree crop acreage in the orchard as follows.

30 apple trees ÷ 57 total orchard trees= 0.53 or 53% apple trees
0.6 acres X 0.53 = 0.3 apple tree acres.
0.6 block acres − 0.3 apple acres = 0.3 pear tree acres.

F. Missing And Partial Tree Planting Pattern

(1) Orchard contains full trees, trees with two scaffold limbs, trees with one scaffold limb, and skips (see diagram below). Tree spacing is 20.0 ft. x 20.0 ft.

Orchard Dimensions: 320.0 ft. L x 80.0 ft. W

X	X		X			X	X		X	X		X	V	X
X	V	X		X	X	X	X	X	\	X	X	X	X	X
X		X	X	X	X		/	X	X	X	X	X		X
X	X	X			X	X	X	X	X		X	X	X	V

Actual tree counts: X = 43 full trees, V = 3 two-scaffold limb trees, \ or / = 2 one-scaffold trees, 11 skips (dead or missing trees). Original stand was 59 trees.

(2) Calculate the number of trees per acre by multiplying the average distance between trees (L) by the average distance between tree rows (W) and dividing this product into 43,560 sq. ft. per/acre.

Example: 43,560 sq. ft./acre÷ (20.0 ft. x 20.0 ft.) = 108.9 rounded to 109 trees/acre.

(3) Calculate the orchard acreage. Orchard dimensions are 320.0 ft. L by 80.0 ft. W that includes the boundary that extends 10.0 ft. beyond the outside rows and 10.0 ft. beyond the ends.

Example: 320.0 ft. L x 80.0 ft. W = 25,600.0 sq. ft. in the orchard.
25,600.0 sq. ft. ÷ 43,560.0 sq. ft./acre = 0.587 rounded to 0.6 acres.

(4) Calculate insurable acres. Count the number of full trees, two scaffold trees, and one scaffold trees. Do not count skips. There is a total of 48 trees.

Example: 48 trees ÷ 109 trees/acre = 0.44 orchard acres rounded to 0.4 acres.

(5) Refer to the SP, CP, BP, and CIH for additional information on acreage adjustments for orchards (e.g., orchards with less than a ninety percent (90%) stand, etc.).

Settlement of Claim When Insured has less than 100% Share

The following examples include mycotoxin damage only to add complexity to the examples. The examples are based on the requirements in subparagraph 902C.

Example 1: Indemnity calculation when QA is involved and QA Provisions are in the SP

In most situations, the tenant's and landlord's corn indemnity payments are affected by each other's marketing choices and the dates of disposition when they differ from each other. This is because claims for a tenant and landlord operation are settled on the basis of the total harvested and appraised production for the total insured acreage for the unit (which represents the combined tenant/landlord operation). Refer to example 2 below for examples when one shareholder requests the option to delay settlement of their claim.

In this example, the landlord and tenant have equal shares of the crop (50%). All of the insured corn acreage was harvested and produced 1,000 bu. The corn production contained 330 ppb Aflatoxin, which puts it in section C3 of the SP because the Aflatoxin exceeded 300 ppb. Section C3 allows the AIP to settle claims if such production is not destroyed, sold, or fed or combination of all of these on or before 365 days after the calendar date for the EOIP.

(1) If production was in on-farm storage and later sold, was in on-farm storage and was transported to commercial storage and later sold, fed, or used in a manner other than feed or sold to other than a disinterested third party, the DF = 0.500. Refer to column (2) in table below for fed production in this example.

(2) If destroyed in a manner acceptable to the AIP, the DF = 1.000. Refer to column (3) below for production destroyed in a manner acceptable to the AIP. If the production was not destroyed in a manner acceptable to the AIP or the insured makes no attempt (or refuses) to destroy the production, no quality adjustment would be allowed for quality deficiencies in section C of the SP.

Each shareholder can select a different disposition and that share of the production will be adjusted accordingly. Assume the landlord's production was sold. Part of the tenant's production was fed, and the remainder destroyed.

Corn With 330 ppb of Aflatoxin	Landlord Sold Production October 15, 2012 (production was transported directly from field to buyer (1)	Tenant FED PART of his Share of Production All fed by end of January 21, 2013 (2)	Tenant acceptably destroys production on February 1, 2013 (3)
Loss guarantee =	1,500.0	1,500.0	1,500.0
DF =	0.750	0.500	1.000
QAF	.250	.500	.000
Sold Gross Production	500.0		0.0
Fed Gross Production		450.0	0.0
Destroyed Production			50
QA Adjusted PTC	125.0	225.0	0.0

PTC entered on both claims	350.0 bu.
Total Production Loss	1150.0 bu. (1500.0 bu. (Unit Guarantee) minus 350.0 PTC = 1150.0)
Landlord's Share = 50%	.500 share X 1150 bu. = 575.0 bu. loss
Tenant's Share = 50%	.500 share X 1150 bu. = 575.0 bu. loss
Since both tenant and landlord in this example have equal shares and have the same price election, the indemnities are the same for both. Neither claim can be completed and processed until at least February 1, 2013, the date of the final known disposition of all production on the unit (which represents the combined tenant/landlord operation).	

Example 2: Corn

This scenario involves corn insured as grain in an area of the country where the calendar date for the EOIP is December 10th. Assume insurability requirements are met (e.g., Farmer Brook (Tenant w/60% share) and Farmer Dunn (Landlord w/40% share) harvest and deliver their corn directly from the field to the elevator on December 5th. The production is comprised of a single 1,000 bu. load from a 20 acre unit. The corn has fourteen percent (14%) moisture (no adjustment required) and no FM but has a test weight of 48 pounds and 25 ppb Aflatoxin (as per a disinterested testing facility). Both shareholders have crop insurance and 100 bu./ac. guarantees but with different companies. They both filed timely notices of loss on December 6th.

Farmer Brook (tenant) sold his sixty percent (60%) share of the production for $3.15/bu. upon delivery. On date of sale, the LMP was $3.50/bu. The elevator had applied a $0.35/bu. RIV for the low test weight but no RIV for the Aflatoxin.

Farmer Dunn's (landlord) share of the grain was placed in commercial storage at the elevator. On January 3rd, Farmer Dunn sold his forty percent (40%) share of the production for $3.40/bu. On date of sale, the LMP was $4.00/bu. The elevator had applied a $0.35/bu. RIV for the low test weight plus a $0.25/bu. RIV for the Aflatoxin.

Question 1A: On December 10th, the adjuster from the Speedy Service Insurance Company arrives to work Farmer Brook's (tenant) claim. Farmer Brook did not submit a written request to delay settlement of the claim. Based solely on the above information, could the Speedy Service Insurance Company finalize Farmer Brook's claim on this date? If not, why?

Answer 1A: Yes. The claim could be finalized because the total amount of the production for the unit was known (Farmer Brook's share is sold, and Farmer Dunn's share is in commercial storage). The quality deficiencies for both shares were determined at the time of delivery and the DFs for the unsold production are contained within the charts on the SP.

Question 2A: On December 29th, the adjuster from the Barely-In-Time Insurance Company arrives to work Farmer Dunn's (landlord) claim. Farmer Dunn did not submit a written request to delay settlement of the claim. Based solely on the above information, could the Barely-In-Time Insurance Company finalize Farmer Dunn's claim on this date and why or why not?

Answer 2A: Yes. The claim could be finalized because the total amount of the production for the unit was known (Farmer Brook's share is sold, and Farmer Dunn's share is in commercial storage). The quality deficiencies for both shares were determined at the time of delivery, and the DFs for the unsold production are contained within the charts on the SP.

Question 2B: On December 29th, the adjuster from the Barely-In-Time Insurance Company arrives to work Farmer Dunn's (landlord) claim. Farmer Dunn submitted a written request to delay settlement of the claim. Based solely on the above information, could the Barely-In-Time Insurance Company finalize Farmer Dunn's claim on this date and why or why not?

Answer 2B: No. The claim could not be finalized because Farmer Dunn requested a delay in claim settlement. The QAF for the production cannot be determined until the production is sold and the RIV is known. The insured may elect to settle the claim based on the chart DFs anytime during the delay period. If the production is not sold by 60 days after the calendar date for the EOIP, the claim will be settled based on the applicable DF.

Question 3A: Which section of the SP Quality Statements applies to Farmer Brooks and what QAF is used for his share (Refer to Question 1 A above)?

Answer 3A: For only Farmer Brook's share of the production, section C2 of the SP is the applicable section since the production contained Aflatoxin over 20 ppb, and was sold (transported directly from the field to the elevator and sold prior to 60 days after the calendar date for the EOIP). The DF is determined by adding the $0.35/bu. RIV for test weight plus the $0.000 RIV for Aflatoxin (no RIV applied) divided by $3.50/bu. (LMP). ($.35/bu. ÷ $3.50/bu. = .100 DF). The QAF is determined by subtracting the .100 DF from 1.000 (1.000 minus .100 DF = .900).

Answer 3A: (continued) Farmer Dunn did not submit a written request to delay settlement of the claim (refer to question 2A). On December 10th, the Farmer Dunn's share of the production was in commercial storage. The DF for test weight for 48 lbs. is .041. The DF for 25 ppb Aflatoxin is .100. The total DF is .041 + .100 = .141. The QAF is determined by subtracting the .141 DF from 1.000 (1.000 minus .141 DF = .859).

Question 3B: Which section of the SP Quality Statements applies to Farmer Dunn (landlord) and what QAF is used for his share (Refer to Question 2A and 2B above)?

Answer 3B: For only Farmer Dunn's share of the production, section C2 of the SP applies because the production was transported directly from the field to the elevator, and commercially stored. Farmer Dunn submitted a written request to delay settlement of the claim on December 29th. He sold the production January 28th, prior to 60 days after the calendar date for the EOIP. The DF is determined by adding the $0.25/bu. RIV for Aflatoxin plus $0.35/bu. RIV for test weight = $.60. $.60 divided by $4.00/bu. LMP =.150. The QAF for farmer Dunn's share is .850 (1.000 minus .150 DF).

Question 4A: For (tenant) Farmer Brook's claim being worked by the Speedy Service Insurance Company on December 10th, how might the production be shown on the PW and after any adjustment for quality, what would be the unit's PTC?

Answer 4A: Farmer Brook's (tenant) PW Section II – Harvested Production (For Illustration Purposes Only). By January 29th, the disposition of Farmer's Brooks production was known.

Measurements	**Gross Production**	**Adjustments To Harvested Production**				
Bin Measurements, Weight Tickets, etc.	Bu. Tons Lbs. Cwt.	Factor	Test Weight	Adjusted Production	Quality Factor	Prod. To Count
Dunn's 40% of 1,000 bu. Load	400.0			400.0	.859	343.6
Brook's 60% of 1,000 bu. Load	600.0			600.0	.900	540.0
					Total	883.6

Question 5A: For (landlord) Farmer Dunn's claim being worked by the Barely-In-Time Insurance Company on January 29th, how might the production be shown on the PW and after any adjustment for quality, what would be the unit's PTC?

Answer 5A: Farmer Dunn's (landlord)

PW Section II – Harvested Production (For Illustration Purposes Only)

Measurements	**Gross Production**	**Adjustments To Harvested Production**				
Bin Measurements, Weight Tickets, etc.	Bu. Tons Lbs. Cwt.	Factor	Test Weight	Adjusted Production	Quality Factor	Prod. To Count
Dunn's 40% of 1,000 bu. Load	400.0			400.0	.850	340.0
Brook's 60% of 1,000 bu. Load	600.0			600.0	.900	540.0
					Total	880.0

Example 3: **Wheat**

This scenario involves HRW wheat. The calendar date for the EOIP is October 31st. Assume insurability requirements are met (e.g., timely planted, insurable type and practice, etc.). Farmer Bob (Tenant) shares a unit of wheat 50/50 with Sally Mae (Landlord). Both shareholders have crop insurance with the same AIP. Due to insurable causes, it is expected there will be quality issues. Prior to harvest, they file a timely NOL and notify their AIP that a portion of the unit would be put in a bin containing poor quality wheat from a previous crop year. The previous year's crop in the bin is properly measured and documented, but the quality of this grain was not determined. Then, on July 7th, the crop is harvested and 1,000 bu. are delivered to the Elevator for commercial storage to be sold at a later date and 500 bu. are farm-stored (as later determined by the adjuster's bin measurements). Neither shareholder elected to delay settlement of their claim.

For this example, assume the entire 1,500 bu. contain 5.5 ppm Vomitoxin bases on proper sampling and test results (all moisture, test weight, etc. were okay). The farm-stored production had been properly sampled, graded, and tested prior to being stored with the previous year's production. The adjuster received the test results for Vomitoxin on July 15th.

On August 10th, Farmer Bob sold his portion of the 1,000 bu. (500 bu.) that had been commercially stored at the Elevator for $3.00/bu. The RIV was $2.00/bu. and the LMP was $5.00/bu. On August 21st, Sally Mae sold her portion of the 1,000 bu. for $3.30/bu. The RIV was $1.90/bu. and the LMP that day was $5.20/bu. On August 30th, the wheat that had been farm-stored and commingled with the previous crop year's production was delivered to the elevator and sold. The elevator's test made upon delivery of this commingled wheat production showed 3.5 ppm Vomitoxin plus twenty-five percent (25%) kernel defects. This production sold for $3.20/bu. The LMP is still $5.20/bu. The elevator applied a $1.50/bu. RIV for the Vomitoxin and a $0.50/bu. RIV for the defects.

Question 1: Which section of the SP Quality Statements would apply to the production sold on August 10th and August 21st? What section would apply to the wheat sold on August 30th?

Answer 1: Section C1a applies since the production was sold prior to 60 days after the calendar date for EOIP.

Question 2: When is the earliest these claims could be finalized?

Answer 2: The earliest these could be finalized was the date when ALL of the production for the unit was known and the adjuster received the test results for Vomitoxin (July 15th).

Question 3: Would the total PTC be the same or different on each sharing party's claim (PW)?

Answer 3: Same.

Question 4: When listing the gross production for the unit, what might be the fewest required number of line items on Sally Mae's PW? Would it be the same for Farmer Bob's PW?

Answer 4: Three lines. One line for the 500 bu. sold on August 10th, one line for the 500 bu. sold on August 21st, and one line for the 500 bu. sold on August 30th that was farm-stored. It would be the same for both insureds.

Question 5: What would be the QAF for production (500 bu.) that was sold on August 10th? What would be the QAF for production (500 bu.) sold on August 21st? What was the QAF of the farm-stored production that was sold on August 30th?

Answer 5: The QAF for production that was sold on August 10th is .600 ($2.00/bu. RIV÷ $5.00/bu. LMP = .400 DF. 1.000 - .400 DF = .600 QAF). The QAF for production that was sold on August 21st is .635 ($1.90/bu. RIV ÷ $5.20/bu. LMP = .365 DF. 1.000 - .365 = .635 QAF).

The QAF for the farm-stored production that was sold on August 30th is .712 ($1.50/bu. RIV for the Vomitoxin ÷ $5.20/bu. LMP = .288 DF. 1.000 - .288 DF = .712 QAF). The RIV for Vomitoxin is based on the elevator test of 3.5 ppm for the commingled production since it is less than the original test of the non-commingled new production (5.5 ppm). A DF for the defects was not allowed to be included in determining the QAF because defects were not documented as being in this year's insured crop.

Question 6: What if the farm-stored production from the current year's production had not been tested for Vomitoxin prior to storing and commingling with the previous year's production nor had the previous year's production been tested for mycotoxins prior to storing with the current year's production?

Answer 6: No QAF would be allowed for Vomitoxin since there is no way of knowing whether the Vomitoxin was from the previous' year's production or the current year's production.

Question 7: What if prior to storing the current year's production with the previous year's production no samples were pulled for grading of covered quality deficiencies from either the current or previous crop years production; e.g., low test weight, kernel damage, etc.?

Answer 7: No QA would be allowed. Insured's

Example 4: **One Sharing Party Insured and One Sharing Party Not Insured**

Assume there is a landlord/tenant arrangement where the landlord has 40% share and the tenant has 60% share. The tenant has a policy on the 60% share but the landlord is uninsured. We can account for 100% of the gross production and all of the quality deficiencies. However, the uninsured landlord will not divulge whether or not he/she has sold, used, fed or destroyed any of their share of the production or if sold, what was received.

Question 1: If we assume all of the grain is eligible for quality adjustment and does not qualify as ZMV under the terms of section A in the SP, can the quality DF be determined for the uninsured landlord's share of the production? How soon could the tenant's claim be worked?

Answer 1: Yes. The claim could be worked as soon as possible once harvest was complete. If the grain qualified as ZMV, the tenant could receive a 1.000 DF on the tenant's share if that sixty percent (60%) of production was destroyed in an acceptable manner. The landlord's forty percent (40%) share would still receive the applicable section A chart DF since disposition cannot be verified.

Question 2: Assume the grain is eligible for quality adjustment under the terms of section B in the SP. Can the quality DF be determined for the uninsured landlord's share of the production? How soon could the tenant's claim be worked?

Answer 2: No. The claim could not be worked until the earlier of knowing the disposition of the landlord's share of the crop or 60 days after the calendar date for the EOIP. We must wait for the 60th day after the calendar date, in case prior to the 60th day, the landlord elects to disclose the disposition of his/her share of the production. At 60 days or more after the calendar date for the EOIP, if the uninsured landlord will not divulge the disposition of his/her forty percent (40%) of the production, the landlord's forty percent (40%) of the production will be considered undamaged production. The SP state that for production sold to a disinterested third party prior to 60 days after the calendar date for the EOIP, the DF for such production will be the RIV applied by the buyer; or for production that remains unsold and unfed 60 days or more after the calendar date for the EOIP, or sold to other than a disinterested third party, fed, or used in a manner other than feed prior to 60 days after the calendar date for the EOIP, the DF for such production will be .500. If the uninsured landlord will not divulge the disposition of the grain, a quality DF cannot be determined for the landlord's forty percent (40%) of the production.

Question 3: Assume the grain is eligible for quality adjustment under the terms of section C3 in the SP. Can the quality DF be determined for the uninsured landlord's share of the production? How soon could the tenant's claim be worked?

Answer 3: No. The claim cannot be worked unless the insured can prove that all of the unit's production has been sold, used, fed or destroyed.

Example 5: **Crop Disposition**

This scenario involves a unit of grain consisting of several loads that have been delivered to an elevator. The elevator is basing settlement with the producer on a TW weighted average of 45.7 lbs. for all production sold or to be sold at a later time. Some of the grain is of good quality. Some is under section A in the SP, and some is under section B.

For this example, assume all insurability requirements have been met. The insured crop is corn. The only quality concern is test weight (no moisture or FM, etc.). The insured decided to commercially store 300 bu. of the corn at the elevator. The adjuster is working the claim on November 30th. The insured did not elect to delay settlement of the claim.

Corn Delivered on November 4
Load #1 = 600.0 bu. at 53.0 TW
Load #2 = 400.0 bu. at 47.0 TW
Load #3 = 800.0 bu. at 39.5 TW
Total 1,800.0 bu.

The insured's delivery/storage receipt for the commercially stored 300 bu. delivered on Nov. 4th is as follows:

300 bu. at 45.7 lb. TW weighted average.

Disposition of the 1,800 bu. as of November 30th (sold by volume based on TW weighted average of 45.7 lbs.)

900.0 bu. were sold at $3.00/bu. on November 8 with a $3.75/bu. LMP.
600.0 bu. were sold at $3.25/bu. on November 20 with a $4.00/bu. LMP.
300.0 bu. remains unsold in commercial storage.

Question 1: Based on the above information, can the claim be settled on November 30th?

Answer 1: Yes. Section B2 of the SP indicates the DF will be .500 for all unsold production, plus any additional DFs in section C that may apply." Therefore, if on the date of adjustment (November 30th), the production is unsold and the insured wishes to settle the claim, the claim can be settled rather than waiting until 60 days after the calendar date for the EOIP.

SCP Form Completion Instructions

A. General Information

(1) Refer to paragraph 1243 for authorized crops and other information pertaining to SCP Claim criteria.

(2) Refer to the DSSH for the form standards.

B. Form Completion Instructions

All of the following completion instructions are "Substantive" (required).

Item #	Item Title	Completion Instructions
1	Insured's Name	Insured's Instructions: Enter your name exactly as shown on the most recent Policy Confirmation.
2	Policy Number	Insured's Instructions: Enter the policy number from your most recent Policy Confirmation.
3	My Insurance Agent is:	Insured's Instructions: Enter the name of your crop insurance agent.
4	My Phone Number is:	Insured's Instructions: Enter your area code and phone number where you can be reached.
5	Town/State Where You Live:	Insured's Instructions: Enter the Town/State where you reside.
6	Crop (only one per form)	Insured's Instructions: Enter the name of the insured crop for which you are filing the loss (list only one crop per SCP form). If you have other insured crops you wish to file a SCP claim on, complete a separate SCP for each crop.
7	Crop Year	Insured's Instructions: Enter the crop year for which the claim is applicable.
8	County Where Crop is Grown (only one per form)	Insured's Instructions: Enter the County where the crop/unit is located (list only one per SCP form).
9	State Where Crop is Grown (only one per form)	Insured's Instructions: Enter the State where the crop/unit is located (list only one per SCP form).
10	Non-Loss (N-L) Units and Est. Prod. Per Acre	Insured's Instructions: Enter in each sub-block (e.g., 10a) any non-loss unit (for the crop listed in item 6) you have and the estimated production per-acre of the non-loss unit. If all of the units for the crop in item 6 are loss units, enter N/A.
11	Loss Unit #	Insured's Instructions: Enter the unit number (s) of the crop for which you are claiming a loss, entered on separate lines.
12	Cause of Loss	Insured's Instructions: Enter the cause(s) of damage in 12a and 12b for this crop. If more space is needed for additional causes of damage, document the additional causes of damage on a separate form.

B. Form Completion Instructions (continued)

Item #	Item Title	Completion Instructions
13	Date of Damage	Insured's Instructions: Enter in 13a, the month during which the damage listed in 12a occurred. In 13b, enter the dates of damage for additional causes of loss listed in 12b, as needed. For progressive damage, enter the month that identifies when the majority of the damage occurred. Include the specific date where applicable as in the case of hail damage (e.g., June 15). If more space is needed for additional dates of damage, document the additional dates of damage on a separate form.
14	Harvest Completion Date	Insured's Instructions: Enter the date the entire acreage on the unit listed on this line was harvested.
15	Companion Contract Yes/No?	Insured's Instructions: For the unit on this line, if you are sharing in the crop with another person and that person has crop insurance on this crop, enter "Yes." If the person does not have crop insurance on this crop, enter "No." If you do not know, enter "Do not know."
16	Assignment of Indemnity Yes/No?	Insured's Instructions: For the unit on this line, enter "Yes" if an Assignment of Indemnity is on file for the crop in item 6 for the crop year; otherwise answer "No."
17	Transfer of Right to Indemnity Yes/No?	Insured's Instructions: For the unit or partial unit on this line, enter "Yes" if a Transfer of Right to Indemnity is on file for the crop in item 6 for the crop year. If no Transfer of Right To Indemnity is on file, check "No."
18	Has all acreage of the loss units listed in item 11 been harvested?	Insured's Instructions: Check "Yes" only if all of the units you listed in item 11 have been harvested; otherwise, check "No." If you checked "No," list the unit numbers for the units listed in item 11 that have not been harvested.
19	Has all of the production from the loss unit(s) listed in item 11 above been sold or commercially stored?	Insured's Instructions: Check yes only if all of the production for all of the units you listed in item 11 above has been sold or commercially stored; otherwise, answer "No." If you checked, "No," list the unit numbers for any of the units that have not been sold or commercially stored.

B. Form Completion Instructions (continued)

Item #	Item Title	Completion Instructions
20	Have you completed harvest of all insurable acreage for all crops on your policy? This includes the crop you listed above as well as any other crop you may have on your policy.	Insured's Instructions: Check "Yes" only if all crops insured under this policy (including the crop listed in item 6 above) have been harvested. If any crop has not been harvested, check "No." If "No" was checked, list the crops not harvested.
21	Do you anticipate any loss units for any other crop not listed in item 11 for this crop year?	Insured's Instructions: Check "Yes" only if you anticipate or know if you have loss units for any other crop not listed in item 11 for the crop year. Otherwise, check "No."
22	Has any production from any acreage from the units listed in item 11 above been farm stored, fed to livestock, or saved for seed?	Insured's Instructions: Check "Yes" if production from any of the loss units listed in item 11 above is farm-stored or has been fed, or saved for seed; otherwise check "No." If you checked "Yes," list the unit number(s) for which "Yes" applies.
23	Do you have disinterested third party written verification (i.e., summary/settlement sheets) available for 100 percent of the production from all units listed in item 11 above? (This must include both landlord and tenant shares, when applicable.)	Insured's Instructions: Check "Yes" only if this is true for all units listed in item 11 above; otherwise answer "No. Such documents must be attached to this form.
24	Is damage for the loss units listed in item 11 similar to other farms in the area?	Insured's Instructions: Check "Yes" only if this is true for all units listed in item 11; otherwise, answer "No." If "No" is checked, list the unit number of any unit listed in item 11 that does not have similar damage and document why that particular unit does not have similar damage.
25	Are you or any member of your household directly associated with the FCI program (i.e., agent, agency owner, loss adjuster, FCIC employee, insurance provider employee or contractor)?	Insured's Instructions: Check "Yes or "No" as applicable.

B. Form Completion Instructions (continued)

Item #	Item Title	Completion Instructions
26	Was all acreage of your insured crop(s) in the county, in which you have a share, reported by you on your AR?	Insured's Instructions: Check "Yes" only if all acreage of your insured crop(s) in the county was reported on your AR; otherwise, check "No." If you checked "No," list the unit or location where the acreage was not reported.
27	On the specific loss unit(s) listed in item 11 above, is your Summary of Coverage correct for:	
	a. Your share?	Insured's Instructions: For all of the units listed in item 11, check "Yes" only if the share you reported on your acreage is correct for all of the units listed in item 11; otherwise answer "No." If "No" is checked, list the unit number(s) for which "No" applies and explain why.
	b. The legal description(s) and/or the FSA Farm Serial Numbers?	Insured's Instructions: For all of the units listed in item 11, check "Yes" only if the legal description(s) and/or the FSA Farm Serial Numbers reported on your AR are correct for all of the units listed in item 11; otherwise check "No. If "No" is checked, list the unit number(s) for which "No" applies.
	c. The practice actually carried out by you (i.e., If you reported your practice as IRR, was water applied at the proper time and rate)?	Insured's Instructions: For all of the units listed in item 11, check "Yes" only if the practice(s) you actually carried out agrees with the practice(s) for all of the units listed in item 11; otherwise check "No." If "No" is checked, list the unit number(s) for which "No" applies.
	d. The type or variety (if applicable)?	Insured's Instructions: For all of the units listed in item 11, check "Yes" only if the type or variety reported on your AR is correct for all of the units listed in item 11; otherwise check "No." If "No" is checked, list the unit number(s) for which "No" applies and enter the correct type or variety for each unit listed.

B. Form Completion Instructions (continued)

Item #	Item Title	Completion Instructions
	e. The total acreage for each unit listed in item 11 above (if measured or re-measured) would be within 5% of what you reported on your acreage report?	Insured's Instructions: For all of the units listed in item 11, check "Yes" only if the total acreage for each unit listed in item 11 (if measured or re-measured) would be within 5% of what you reported on your AR; otherwise, check "No." If you checked "No," list the units listed in item 11 for which "no" applies.
28	Pre-printed Statements above the insured's certification/signature blocks. Insured or Verifier - Make no entry	
29	Insured's Signature and Date of Signature	Insured's Instructions: The insured or the insured's authorized representative signs the form and enters the date signed.
30	Company Use only: Verifier's Signature, Code #, and Signature Date	Verifier's completion instructions After the verifier has verified that the crop/unit(s) has met all of the required criteria for processing the claim as an SCP claim in (including the required documentation provided with this form), has transferred the information to a PW and attached a copy of this form to the PW, the verifier must sign the form, must enter the verifier's code number, and must enter the signature date the verifier signed the form. If there is any crop/unit listed above that does not meet the qualifications, the verifier is to list these on the form.
31	Page ____of _____	Insured's Instructions: Enter the page numbers (Example: Page 1 of 1, Page 1 of 2, Page 2 of 2, etc.).

FOR ILLUSTRATION PURPOSES ONLY

Simplified Claims Process Qualification & Notice Of Loss

Note: For proper service, fill in all blanks and answer all questions as completely as possible.

1. Insured's Name (Please Print): I. M Insured								2. Policy Number: XXXXX
3. My insurance Agent is: John Doe			4. My phone number is: (XXX)XXX-XXXX			5. Town/State Where You Live: Any Town, Any State		
6. Crop (only one per form) Corn	7. Crop Year XXXX		8. County Where Crop is Grown (Only one per form): Adams			9. State Where Crop is grown (only one per form): Any State		
10. Non-Loss (N-L) Units and Est. Prod. Per Acre	10a. N-L Unit 0001-0103OU		10b. N-L Unit 0001-0104OU		10c. N-L Unit N/A	10d. N-L Unit N/A		10e. N-L Unit N/A
	10a. Est. Prod 150 bu.		10b. Est. Prod. per Acre 175 bu.		10c. Est. Prod. per Acre N/A	10d. Est. Prod. per Acre N/A		10e. Est. Prod. per Acre N/A
11. Loss Unit #	12a. Cause Of Loss 13a. Date Of Damage		12b. Cause Of Loss 13b. Date Of Damage		14. Harvest Completion Date	15. Companion Contract - Yes/No?	16. Assignment Of Indemnity - Yes/No?	17. Transfer Of Right To Indemnity- Yes/No?
	12a.	13a.	12b.	13b.				
0001-0102OU	Excess Moisture	June	Hail	June 15	October 10	Yes	Yes	No
0001-0102OU	Excess Moisture	June	Hail	June 15	October 15	Yes	Yes	No

Note: Please use a separate form for additional loss units.

Carefully consider each of the following questions and check the "Yes" or "No" box.	**Yes**	**No**
18. Has all acreage of the loss unit(s) listed in item 11 above been harvested? If "No," list the unit number(s) for which "No" applies:	√	
19. Has all of the production from the loss unit(s) listed in item 11 above been sold or commercially stored? If you answered no, list the applicable unit numbers meeting "No"	√	
20. Have you completed harvest of all insurable acreage for all crops on your policy? This includes the crop you listed above as well as any other crop you may have on your policy. If you answered "No," list the crops not harvested: Soybeans		√

SCP Form Completion Instructions (Continued)

Carefully consider each of the following questions and check the "Yes" or "No" box.	**Yes**	**No**
21. If you answered "No" to the above question, do you anticipate loss units for any other crop not listed in item 11 above for this crop year?		√
22. Has any production from any acreage from the units listed in item 11 above been farm stored, fed to livestock, or saved for seed? If "Yes," list the unit number(s) for which "Yes" applies: Unit 0001-0102OU	√	
23. Do you have disinterested third party written verification (i.e., summary/settlement sheets) available for 100 percent of the production from all units listed in item 11 above? This must include both landlord and tenant shares, when applicable.	√	
24. Is damage for the loss units listed in item 11 similar to other farms in the area? If "No," list the unit(s) for which "No" applies and explain: Unit 0001-0102OU – Most other farms in the area received no hail damage		√
25. Are you or any member of your household directly associated with the FCI program (i.e., agent, agency owner, loss adjuster, FCIC employee, insurance provider employee or contractor)?		√
26. Was all acreage of your insured crop(s) in the county, in which you have a share, reported by you on your AR? If "No," list the unit or location where the acreage was not reported:	√	
27. On the specific loss unit(s) listed in item 11 above, is your Summary of Coverage correct for:		
a. Your share? If "No," list the unit(s) and explain here:	√	
b. The legal description(s) and/or the FSA farm serial number? If "No," list the unit(s) for which "No" applies: Unit 0001-0102OU		√
c. The practice actually carried out by you (i.e., If you reported your practice as IRR, was water applied at the proper time and rate)? If "No," list the unit(s) for which no applies:	√	
d. The type or variety (if applicable)? If "No," list the unit(s) numbers for which "No" applies and enter the correct type or variety for each unit listed:	√	
e. The total acreage for each loss unit listed in item 11 above (if measured or re-measured) would be within 5% of what you reported on your AR? If "No," list the unit(s) for which "No" applies:	√	

28. This form serves as written verification of your NOL and as an aide in determining qualified insureds for the SCP. We may rely on the information you provide on (or attach to) this form in making material determinations in the preparation of your claim. Once this completed NOL Form and supporting documentation has been received by your insurance provider, it will be determined whether your claim qualifies for the SCP. If it does qualify, the appropriate claim for indemnity form(s) will be prepared and may need to be sent to you for your signature if the AIP determines when reviewing this information with you over the phone that a correction is needed. Otherwise, the signature on this SCP form will serve as the signature for each Claim for Indemnity form to which this information was transferred, and a copy will be mailed to you. The PW(s) will contain all the necessary data and production information to complete your claim. If qualified, you will have your claim processed in the most expedient manner possible. You will not need to wait for an adjuster. The SCP is subject to an in-field review for compliance to established policies and procedures. If any of the unit(s) listed in item 11 above does not qualify for the SCP, you will be contacted in the near future by a claims representative to set up an appointment to adjust your loss on that or all units listed above.

Supporting documentation must be attached to this form and delivered to the address provided by your agent or insurance provider. You must attach either a settlement sheet(s), summary sheet(s) or similar disinterested third-party ledger(s) that accounts for all production from any crop unit you have listed above. Individual load tickets will not qualify. Individual loads on any settlement/summary sheet(s) must be clearly marked to indicate which unit they came from. If you have FSA or similar measurement service such as utilization of GPSs, remote sensing devices, etc., for the current crop year, please attach copies and indicate who made the measurement. In all cases you must attach copies of maps identifying each field, crop and acreage by loss unit. The per unit acreage used in calculating any indemnity will be the lesser of your reported acres or your actual planted acres.

This form example does not illustrate all required entry items or statements; e.g., signatures, etc. Refer to the SCP Form instructions above for all requirements.

GSI Report Standards & Completion Instructions

A. General Information

(1) Title of "GSI Report." If using a PW to record this inspection, mark out "PW" and write in "GSI Report."

(2) Refer to the DSSH for the form standards.

B. Form Completion Instructions

All of the following completion instructions are "Substantive" (required).

Item #	Item Title	Completion Instructions
1	Insured	Name of insured that identifies exactly the person (legal entity) to whom the policy is issued.
2	Policy Number	Insured's policy number.
3	Crop Year	Crop year, as defined in the policy, for which the claim is filed.
4	Crop	Name of the crop.
5	Unit Number	Unit number from the Summary of Coverage after it is verified to be correct (e.g., 0001-0001BU).
6	Acres	The number of acres, to tenths (unless specified otherwise in the specific LASH) for the unit.
7	Share	Insured's share in the crop, to three decimal places.
8	Practice	Three-digit code number entered exactly as specified on the AD, for the practice carried out by the insured. If "NPS," enter the appropriate 3-digit code number from the AD.
9	Appraised Potential	Per-acre appraisal of potential production for the acreage appraised. Refer to the appropriate appraisal instructions in the applicable crop loss adjustment handbook.
10	Companion Contract	If no other person has a share in the unit (insured has 100 percent share of a loss affected unit), make no entry. If there is another person sharing in the crop that has a multiple-peril crop insurance contract, enter the name of the other person. If the contract is with the same AIP, enter same. If a different AIP insures the other person, enter the name of the AIP, if known.
11	Field ID	The field identification symbol from the sketch map or aerial photo.

B. Form Completion Instructions (continued)

Item #	Item Title	Completion Instructions
12	Planting Date (replanting date, if replanted)	The date(s) the crop was planted and date(s) replanted, if the crop was replanted. If dates differ for fields, identify field and date field was planted and replanted, if replanted. When there is a reason to doubt the time of planting, (examples: (1) if the insured says the crop was replanted and you question whether it was replanted or whether this is actually the initial planting; or (2) when there is a poor stand and there appears to be no COL that would have reduced the stand) obtain receipts for seed/plants and custom planting, if applicable. If all of the information cannot be obtained, explain why.
13	Narrative	Enter, "See attached GSI Report" and "aerial photo."
14	Insured's Signature and Date	Insured's (or insured's authorized representatives) signature and date: Before obtaining the signature, review all entries on the Appraisal Worksheet with the insured, (or insured's authorized representative) particularly explaining codes, etc., which may not be readily understood. If the insured refuses to provide his/her signature, enter "Refuses to provide signature" and further explain insured's refusal on a Special Report, if needed.
15	Adjuster's Signature, Code Number, and Date	Signature of adjuster, code number, and date of inspection.

C. Required Questions

The following are the minimum questions required for this report:

(1) What kind of tillage methods has the insured carried out? Record the tillage methods used and dates tillage was done. Obtain documentation. If all of the information cannot be obtained, explain why.

(2) What kind of weed control practices are being carried out? Record the methods, and if chemical control was used the name of the product used, the number of times used, and dates used. Obtain receipts and documentation for weed control and application when there is a weed problem. If all of the information cannot be obtained, explain why.

(3) Has a current soil test(s) been taken on any of the insured acreage? If yes, record the date of test and test results. If all of the information cannot be obtained, explain why.

(4) How does the crop inspected compare with those in the general area? If the condition of the crop being inspected differs from those in the general area, document differences.

C. Required Questions (continued)

(5) What fertilizer program is being followed? Record the type of program used. Record product names used and dates used. If a product was applied by a commercial firm, obtain the name of the firm. Obtain receipts for products and dates the product was applied if there is a poor stand or there are other signs of no or under fertilization of the crop. If all of the information cannot be obtained, explain why.

(6) What insecticide/pesticide program is being followed? Record the type of program used. Record production names used and dates used. If a product was applied by a commercial firm, obtain the name of the firm. Obtain receipts for products and application when there is an insect or pesticide problem. If all of the information cannot be obtained, explain why.

(7) Weather conditions. Briefly explain the weather in the past 4 to 6 weeks, the current conditions, and the long-range forecast for the area.

(8) Is an IRR practice insured on the crop unit being inspected? If yes then,

(a) type of irrigation system and average time used?
(b) is the irrigation system adequate? If no, explain in comment section.
(c) is the irrigation water adequate? If no, explain in the comment section.

Note: The comment section should identify whether the insured used efficient irrigation by applying less irrigation water than historical applications and claiming increased irrigation efficiencies. If the insured implemented efficient irrigation, verify that the measures claimed to increase efficiencies are implemented and adequate.

(9) Should the producer's farming operation be reviewed at a later date? Answer yes or no, and explain why or why not.

(10) Comments. Briefly enter any other pertinent information; e.g., for perennial crops, whether practices necessary to protect the crop and/or move the crop toward maturity and yield upon which the guarantee is based has been carried out.

(11) Certification Statement. Directly above the insured's signature block, the Certification Statement exactly as shown in the most current DSSH, FCIC-24040.

(12) Privacy Act and Non-Discrimination statements. These statements are required statements that must be printed on the form or provided as a separate document. The current Non-Discrimination Statement and Privacy Act Statement can be found on the RMA website at www.rma.usda.gov.

Note: Refer to the DSSH, FCIC-24040 for other crop insurance form requirements (e.g., point size of font, etc.)

Rounding Rules

Carry out computations to one digit beyond the digit to be rounded. If the last digit is 4 or less, disregard; if 5 or more, round upward.

Example: Bushel fractions are to be rounded to tenths.
100.04 bu. - Record as 100.0 bu.
100.66 bu. - Record as 100.7 bu.

Item	Form	Rounding Rules			
Acres**	Production Report, APH Database, AR, All Loss Forms.	Tobacco Round to (0.01) Other Crops Round to (0.10)			
		Unit of Measure			
		Bushels, Boxes, Cartons, Lugs, Hundredweight (Cwt.)	Tons	Barrels	Dollars, Pounds
APH Yields (Per Acre)	Production Report, APH Database, AR.	Round To: 1.00	0.10	0.10	1.00
Total Production	Production Report, APH Database, AR	Round To: 1.00	0.10	0.10	1.00
Production To Count	All Loss Forms	Round To: .10	0.10	0.10	1.00
Insured (Share)**	AR, NOL, Loss Pmt., All Loss Forms	Round To: 0.001 for all crops			

** Refer to SRA Appendix III for line/record rounding rules regarding indemnity calculations. To facilitate Acreage Crop Reporting Streamlining Initiative, RMA's systems will allow acreage to be reported, and rounded, to hundredths (0.01); and for shares to be reported, and rounded, to the ten-thousandths (0.0001). Agents and adjusters should adhere to the field size elected by their AIP for shares and acres and round accordingly to field size provided.

"Round to (1.00)" Indicates rounding to whole numbers in a 2-position decimal field.
"Round to (0.10)" Indicates rounding to tenths in a 2-position decimal field.
"Round to (0.01)" Indicates rounding to hundredths in a 2-position decimal field.
"Round to (0.001)" Indicates rounding to thousandths in a 3-position decimal field.

For all other Raisin rounding rules, refer to the Raisin LASH.

For all other rounding rules for loss calculations (appraisals, cubic feet, moisture percentage, FM or dockage, test weight, etc.) are found in the LAM or individual crop LASHs.

Exhibit 20

Table to Convert Fractions to Percent Figures

Table To Convert Fractions To Percent Figures																	
	3rd	4th	5th	6th	7th	8th	9th	10th	11th	12th	13th	14th	15th	16th	17th	18th	19th
1	.333	.250	.200	.167	.143	.125	.111	.100	.091	.083	.077	.071	.067	.063	.059	.056	.053
2	.667	.500	.400	.333	.286	.250	.222	.200	.182	.167	.154	.143	.133	.125	.118	.111	.105
3		.750	.600	.500	.429	.375	.333	.300	.273	.250	.231	.214	.200	.188	.176	.167	.158
4			.800	.667	.571	.500	.444	.400	.364	.333	.308	.286	.267	.250	.235	.222	.211
5				.833	.714	.625	.556	.500	.455	.417	.385	.357	.333	.313	.294	.278	.263
6					.857	.750	.667	.600	.545	.500	.462	.429	.400	.375	.353	.333	.316
7						.875	.778	.700	.636	.583	538	.500	.467	438	.412	.389	.368
8							.889	.800	.727	.667	.615	.571	.533	.500	.471	.444	.421
9								.900	.818	.750	.692	.643	.600	.563	.529	.500	.474
10									.909	.833	.769	.714	.667	.625	.588	.556	.526
11										917	.846	.786	.733	.688	.647	.611	.579
12											.923	.857	.800	.750	.706	.667	.632
13												.929	.867	.813	.765	.722	.684
14													.933	.875	.824	.778	.737
15														.938	.882	.833	.789
16															.941	.889	.842
17																.944	.895
18																	.947

Metric Conversion Table

From Metric To British Units Of Measurement				
Length	**Symbol**	**When You**	**Multiply By:**	**To Find:**
	Mm	Millimeters	0.04	Inches
	Cm	Centimeters	0.4	Inches
	M	Meters	3.3	Feet
	M	Meters	1.1	Yards
	Km	Kilometers	0.6	Miles
Area	cm2	square	0.16	square inches
	m2	square meters	1.2	square yards
	km2	square	0.4	square miles
	Ha	Hectares	2.5	Acres
Volume	m3	cubic meters	35	cubic feet
	m3	cubic meters	1.3	cubic yards
Mass (Weight)	G	Grams	0.035	Ounces
	Kg	Kilograms	2.2	Pounds
	T	Tones	1.1	Tons

Converting Volume to Bushels, Hundredweight, or Pounds

Net cubic feet multiplied by the conversion factor, hundredweight, or pounds shown in the chart below results in unadjusted gross production (before adjustments for weight, moisture, and dockage).

Crop	For Bushels	For Hundredweight	For Pounds
Barley	0.8		
Beans (Dry)	0.8		1/
Buckwheat	0.8		
Camelina	0.8		1/
Canola/rapeseed	0.8		1/
Corn (Shelled)	0.8		
Corn (ear)	0.4		
Corn (Ground Shelled)	0.7		
Corn (Ground Ear)	0.6		
Corn (Hybrid Seed)	0.8		
Flaxseed	0.8		
Grain Sorghum	0.8		
Hybrid Seed Sorghum	0.8		
Millet	0.8		
Mustard	0.8		1/
Oats	0.8		
Peanuts (Spanish SW & SE)			19.2 1/
Peanuts (Runner)			19.0 1/
Peanuts (Virginia)			15.3 1/
Peanuts (Valencia)			17.5 1/
Peas (Dry)	0.8		1/
Popcorn (Shelled)	0.8		1/
Popcorn (Ear)	0.4		1/
Potatoes		0.4167	
Rice	0.8		1/
Rye	0.8		1/
Safflowers	0.8		1/
Soybeans	0.8		
Sesame	0.8		1/
Sunflower (oil and non-oil)	0.8		1/
Louisiana Sweet Potatoes (Pilot)		0.4283	
Wheat	0.8		
Wild Rice (Cultivated)	0.8		2/

1/ To convert to pounds: Net cubic feet x Conversion Factor x Actual Test Weight = adjusted Gross Production for test weight.

2/ Refer to the Cultivated Wild Rice Handbook for specific weight to use for calculations.

Unit of Measure of Production and Standard Weight Per Unit, by Crop

(1) For crops that have a bushel unit of measure: If settlement sheets provide scale weights (i.e., pounds) instead of bushel weights, determine the gross bushel amount by dividing the total gross pound weight of production (before adjustments) shown on the settlement sheet by the standard bushel weight; e.g., 50,000 pounds of shelled corn divided by 56 (standard bushel weight) = 892.86 rounded to tenths – 892.9 bushels.

(2) For crops that have a pound unit of measure: In the rare case that a settlement sheet showed bushels for a crop having pound unit of measure, then determine the pounds of production by multiplying the total bushel weights (before adjustments) by the standard bushel weight; e.g., 50 bushels of safflowers times 35 (standard bushel weight) = 1,750 pounds.

***

Crop Name	Unit of Measure
Almonds	Pounds
Apples (Area B)	Bushels (42 lbs.)
Apples (Area C)	Bushels (40 lbs.)
Apples (Area A)	Boxes (35 lbs. lose/field box)
***Avocados California Only	Pounds
***Avocados Florida Only	Bushels (55 lbs.) 3/
Barley	Bushels (48 lbs.) 3/
Barley (Malting)	Bushels (48 lbs.) 3/
***Beans, Fresh Market	Cartons (30 lbs.)
Beans, Processing	Tons 1/
Blueberries	Pounds
Buckwheat	Bushels (48 lbs.) 3/
Cabbage	Hundredweight
California Citrus Tree	% Tree Damage/Dollar 5/
Camelina	Pounds (50 lbs.) 4/
Caneberry	Pounds
Canola/Rapeseed	Pounds (50 lbs.) 4/
ARH Citrus (Pilot)	Carton/Dollars 2/
ARH Cherry (Pilot)	Pounds/Dollars 2/
ARH Strawberries	Pounds/Dollars 2/
Chile Peppers, Processing (Pilot)	Pounds/Dollars 2/
Citrus (AZ-CA) Oranges Lemons Grapefruit Mandarin/Tangerines & Tangelos	 Cartons (38 lbs.) Cartons (40 lbs.) Cartons (32 lbs.) Cartons (25 lbs.)

Unit of Measure of Production and Standard Weight Per Unit, by Crop (Continued)

Crop Name	Unit of Measure
Citrus (FL)	
Grapefruit	Boxes (85 lbs.)
Limes	Boxes (88 lbs.)
Oranges, Lemons, Tangelos, & Tangors (Temples)	Boxes (90 lbs.)
Tangerines & Tangors (Murcotts)	Boxes (95 lbs.)
Citrus (TX) Early & Midseason Oranges Late Oranges All Other Grapefruit Ruby Red Grapefruit Rio Red & Star Ruby Grapefruit	Tons 1/
Cultivated Clams (Pilot)	Dollar (Individual Clam Value) 6/
Corn, Shelled	Bushels (56 lbs.) 3/, 7/, 8/
Corn (Grain)	Bushels (56 lbs.) 3/, 7/
Corn, Ear Husked	Bushels (70 lbs.) 3/, 8/
Corn (Silage)	Tons 1/
Cotton	Pounds
Cotton, ELS	Pounds
Cranberries	Barrels (100 lbs.)
Dry Beans	Pounds (60 lbs.) 3/
Figs	Pounds
Flaxseed	Bushels (56 lbs.) 3/
***Florida Fruit Trees	% Stand/Tree Damage/Dollar 5/
Forage Production	Tons 1/
Forage Seed (Pilot)	Pounds
Forage Seeding	% Stand/Dollar 5/
Grain Sorghum	Bushels (56 lbs.) 3/
Grass Seed (Pilot)	Pounds (60 lbs.) 4/
Grapes	Tons 2/
Table Grapes	Lugs (20-21 lbs.) 9/
***Hawaii Tropical Fruit	Pounds
***Hawaii Tropical Fruit Trees	% Tree damage/Dollar 5/
Hybrid Seed Corn	Bushels (56 lbs.)/Dollar 2/, 3/
Hybrid Sorghum Seed	Bushels (56 lbs.)/Dollar 2/, 3/
Macadamia Nuts	Pounds
Macadamia Trees	% Stand/Tree damage/Dollar 5/
Millet	Bushels (50 lbs.) 3/

Unit of Measure of Production and Standard Weight Per Unit, by Crop (Continued)

Crop Name	Unit of Measure
Mint	Pounds
Mustard	Pounds (60 lbs.) [4/]
Livestock	Hundredweight/Dollar [2/]
Nursery	Dollar (Individual Plant Value)
Nursery Value Select (NVS)	Dollar (Individual Plant Value)
Oats	Bushels (32 lbs.) [3/]
Olives Table Oil	 Tons [1/] Gallons
Onions	Hundredweight
Peaches	Bushels (50 lbs.) [3/]
Peanuts	Pounds
Pears	Tons [1/]
Peas, Dry	Pounds (60 lbs.) [4/]
Peas, Green	Pounds
Pecans	Pounds/Dollars [2/]
Pecan Trees	% Stand/Tree damage/Dollar [5/]
Peppers	1 1/9 bushels (per box) /Dollar [2/]
Pistachios	Pounds
Popcorn	Pounds (56 lbs.)
Potatoes (Northern and Central/Southern)	Hundredweight
Prunes	Tons [1/]
***Pumpkins	Tons [1/]
Raisins	Tons [1/] - Dollar [2/]
Rice	Pounds (45 lbs.)
Rye	Bushels (56 lbs.) [3/]
Safflowers	Pounds (35 lbs.) [4/]
Sesame (Pilot)	Pounds (45 lbs.) [4/]
Sorghum Silage (Pilot)	Tons [1/]
Soybeans	Bushels (60 lbs.) [3/]
Stonefruit Fresh Apricots Fresh Nectarines Freestone Peaches Proc. Apricots and Proc. Cling Peaches, and Processing Freestone Peaches Fresh Plums	 Lugs (24 lbs.) Lugs (25 lbs.) Lugs (22 lbs.) Tons [1/] Lugs (28 lbs.)

Unit of Measure of Production and Standard Weight Per Unit, by Crop (Continued)

Crop Name	Unit of Measure
Strawberries	Pounds
Sugar Beets	Pounds
Sugarcane	Pounds
Sunflower Seed (Oil)	Pounds (29 lbs.) 4/
Sunflower Seed (Non-Oil)	Pounds (25 lbs.) 4/
Sweet Corn (Processing)	Tons 1/
Sweet Corn (Fresh)	Containers (42 lbs.)/Dollar 2/
Sweet Potatoes Louisiana (Pilot)	Hundredweight
***Texas Citrus Trees	% Tree Damage/Dollar 5/
Tobacco	Pounds
Tomatoes (Processing)	Tons 1/
Tomatoes (Fresh)	Cartons (25 lbs.)/Dollar 2/
Tomatoes (Fresh Guarantee)	Cartons (25 lbs.)
Walnuts	Pounds
Wild Rice, Cultivated	Pounds (25 lbs. for MN) 4/ Pounds (29 lbs. for CA) 4/
Wheat	Bushels (60 lbs.) 3/

1/ Tons = 2,000 pounds

2/ Loss measurement is first based on weight/capacity measurement, as shown, and then is converted to dollars.

3/ These crops have bushel units of measure.

4/ These crops have a pound unit of measure and the standard test weight is not used in the farm-stored calculation of gross production.

5/ For Forage Seeding, the loss measurement is first based on the % of stand, and then the dollar loss is determined from this. For Tree Crops, the loss measurement is first based on the % of tree damage, and then the dollar loss is determined from this.

6/ Clam value by size

7/ To convert weight of ear corn to equivalent bushels of shelled corn, divide by 70.

8/ For corn insured as grain that is to be harvested and ground and stored as corn and cob meal (ground ear corn) or chopped for earlage, a pre-harvest appraisal is required to establish the production. (Refer to paragraph 921.)

9/ 20 lbs. in Arizona and Coachella Valley, CA district; 21 lbs. in all other CA districts.