United States
Department of
Agriculture

Federal Crop
Insurance
Corporation

Product
Administration and
Standards
Division

FCIC-25010 (02-2010)

LOSS ADJUSTMENT MANUAL (LAM) STANDARDS HANDBOOK

2010 and Succeeding Crop Years

UNITED STATES DEPARTMENT OF AGRICULTURE
WASHINGTON, D.C. 20250

FEDERAL CROP INSURANCE HANDBOOK	**NUMBER: 25010 (02-2010)**
SUBJECT: **LOSS ADJUSTMENT MANUAL (LAM) STANDARDS HANDBOOK 2009 and SUCCEEDING CROP YEARS**	**OPI:** **Product Administration and Standards Division** **APPROVED:** **DATE:** /S/ Tim B. Witt 2/19/10 **Deputy Administrator, Product Management**

SUMMARY OF CHANGES/CONTROL CHART

The following list contains significant changes to this handbook, as determined by us. It may not represent all changes made. All changes made to this handbook are applicable regardless of whether or not listed.

Major Changes: Highlight identifies changes or additions in the text. Three stars (***) identify where information has been removed.

Changes for February 2010 Issuance (FCIC-25010):

Throughout the handbook replaced Guaranteed Production (GP) Tobacco and Quota Tobacco with Tobacco because the GP Tobacco and Quota Tobacco programs were terminated for the 2010 crop year and replaced with the Tobacco program.

1. PAR. 1 — Clarified that all or parts of the LAM may not be applicable to certain plans of insurance or pilot programs. When the LAM Standards Handbook is not applicable to a commodity standards handbook, it should specify such.

2. PAR. 2 B (2) — Clarified that when for a particular loss adjustment form, the item numbers for the entry instructions in the FCIC-issued loss adjustment standards handbooks does not correlate with the item numbers on the AIP's form, AIPs may change the item numbers (only) for the entry instructions to agree with the item numbers on their form.

3. PAR. 3 D — Added the Prevented Planting Loss Adjustment Standards Handbook and Underwriting Guides for a specific commodity or plan of insurance to the Document Precedence Sequence.

4. PAR. 4 — Added the abbreviation for the Common Crop Insurance Policy (Basic Provisions).

5. PAR. 5 B (5) — Clarified that due to the nature of some insurance products such as livestock, certain revenue products, etc., there may be other issuances of underwriting guidelines (procedures) or general loss adjustment procedures specific to each of those insurance products, which are used in lieu of all or parts of the LAM.

SUMMARY OF CHANGES/CONTROL CHART (Continued)

6.	PAR. 7 I (2) (b)	Revised to indicate agents may perform administrative tasks as described in PAR. 137 A (9), but cannot be involved in the Simplified Claim Process any other way.
7.	PAR. 11 E	Added whether an insured is allowed to receive an indemnity under the Federal crop insurance program and benefits for the same loss from another USDA program.
8.	PAR. 21 D (4) (a)	Clarified that the under-reported liability is for the unit the AIP determined to have existed.
9.	PAR. 21 D (4) (b)	Clarified that the over-reported liability is for the unit the AIP determined to have existed and that any overstated premium resulting from the over-reported liability will be reduced accordingly and refunded to the insured if already paid.
10.	PAR. 29 C	Added that the procedures in subparagraph (2) were applicable to grain crops and in subparagraph (3), added procedures for short rated ARH Citrus acreage.
11.	PAR. 29 L	Added a paragraph explaining perennial acreage that has a reduction in stand due to disease, a natural occurring weather-related event, or a man-made event that occurred prior to insurance attaching, may require a revised acreage report to reduce the reported acreage. Referenced paragraph 80 G (3) (a) 2 for further instructions.
12.	PAR. 40 K (3)	Clarified that the exception is only for perennial crop acreage from which crops are produced from trees, vines, or bushes, and that forage crops are those grown for seed, grazing, or production.
13.	PAR. 43 A (2)	Deleted this subparagraph and renumbered the remaining subparagraphs accordingly. This subparagraph is no longer needed since the organic farming practice statement is now in all SPOIs for all applicable crops in all counties and states.
14.	PAR. 44 B (10)	Deleted “Applicable only for crops with a CCD of November 30, 2008, or later” and revised uninsurable acreage dealing with Prairie Pothole National Priority Area to be consistent with the language in the “Farm Bill Amendment (10-Farm Bill).”
15.	PAR. 46 A (1)	Revised to show correct subparagraphs in the paragraph 65 reference.
16.	PAR. 49 C (1)-(3)	Revised to be consistent with FAD-103 (including deleting previous item (2) and combining into item (1)).
17.	PAR. 52 C and D	Added specific entry instructions for the new Production Worksheets for applicable crops.
18.	PAR. 54 B	Added after “Basic units will be corrected at loss time,” the following: “(or any time they are found to be incorrect).”

SUMMARY OF CHANGES/CONTROL CHART (Continued)

19.	PAR. 55 B and C	Removed guaranteed and quota tobacco since these policies have been replaced with the tobacco policy for the 2010 crop year.
20.	PAR. 55 I (1) and (2)	Revised paragraph to reflect the differences for Enterprise Units covered under the Common Crop Insurance Policy Provisions (CCIP) Basic Provisions, Revenue Assurance (RA) Basic Provisions, and Crop Revenue Coverage (CRC) Basic Provisions in accordance with: (1) each's policy provisions, (2) the Enterprise Unit Amendment (10-Enterprise Unit), and (3) additional information contained in PM-09-046 regarding individual EUs for winter and spring types of wheat for the RA plan of insurance.
21.	PAR. 55 I (3)	Revised to reflect the policy provision differences for Whole Farm Units covered under the CCIP Basic Provisions or the RA Basic Provisions.
22.	PAR. 61 A	Added "If available to" to the first sentence to clarify that some of the listed material may not be available at some county offices.
23.	PAR. 62	Revised the inspection types to agree with PAR. 8 B (4).
24.	PAR. 64 B (11) (a)	Added in the first sentence after "on a share basis", the following: "with the same AIP" to clarify that before this provision is applicable both persons insuring the crop on a share basis must be insured with the same AIP.
25.	PAR. 65 F	Changed "or is going to plant to another crop" to "or plants to another crop."
26.	PAR. 65 G (2) (b)	Added "Insurability of the second crop is determined in accordance with the applicable policy provisions as outlined in PAR. 46, First (1st) Insured Crop Planted and Second(2nd) Crop."
27.	PAR. 65 L	Added the following to the end of title: "for crops not having replant payment provisions" to clarify that this paragraph is specific to crops that do not have replant payment provisions in the policy.
28.	PAR. 66 A (2)	Divided the former subparagraph (a) into two subparagraphs - subparagraph (a) for immature production and (b) for mature production, and re-alphabetized the remaining subparagraphs accordingly. In subparagraph (a), added information pertaining to zero appraisals and finalization of the claim when acreage is released to go to a second crop and the first crop's seed has not emerged due to insufficient soil moisture.
29.	PAR. 66 C (2) (a)	Added "The acreage has been" to indicate what has been put to another use.
30.	PAR. 69 A (1)	Added "insured" to indicate a Delayed Notice is a notice the insured files after the time specified in the policy provisions. Also, in footnote 2, revised, the beginning of the first sentence to state: "For crops insured under the CRC and RA Basic Provisions." Also in the first sentence, in front of "claims," added "insured's, and replaced "any crop in the unit" with "the crop." In the second sentence replaced, "For all other plans of insurance" with "For crops insured under the CCIP Basic Provisions."

SUMMARY OF CHANGES/CONTROL CHART (Continued)

31.	PAR. 69 A (2) (b)	Added "Has harvested" at the beginning of the first sentence.
32.	PAR. 69 A (3)	Added procedures for when an insured requests delayed measurement of his or her farm-stored grain production for up to 180 days after the end of the insurance period.
33.	PAR. 74 F	Added the appraisal is recorded on the appropriate Appraisal Worksheet for each crop unit being inspected. Also, added to follow the appraisal and Appraisal Worksheet instructions (including insured and adjuster's signatures) in the applicable crop LASH for the crop being inspected.
34.	PAR. 80	Added in the introductory paragraph, the following: "Acreage measurements must only be made by the AIP, FSA, or a disinterest third party measurement service."
35.	PAR. 80 G (3) (a) 2	Clarified procedures for reducing the perennial acreage when the stand has been reduced prior to insurance attaching.
36.	PAR. 80 I	Added to document why acreage could not be measured and to explain how the estimated acres were determined.
37.	PAR. 81 C	Added the following introductory sentence: "For any of the following field formulas, if the crop acreage being measured is for Fresh Market Peppers, Fresh Market Tomatoes (Dollar Plan), Fresh Market Tomatoes (Guaranteed Production Plan), or Processing Tomatoes, see the applicable crop LASH for additional measurement instructions."
38.	PAR. 81 C (6)	Deleted the words "a significant" and replaced with "any."
39.	PAR. 84 A (3)	Added "unjustified difference in quality" as another item to be aware of when verifying total production. Also, added that if there are large differences in the quality of the crop or from other producer's production of the same crop, with consideration of the insured cause, to: (1) determine and document if there is a justifiable reason for the differences, and (2) retain such documentation in the insured's loss file.
40.	PAR. 84 B (1) (a)	Added: "whether good farming practices were employed, quality of mature crop released to go to other use, etc." as other items to consider when determining if total harvested production is correct.
41.	PAR. 85 B (3)	Added the following examples of when appraisals are needed to determine production: (1) A high-moisture grain crop will be mechanically packed for storage; (2) The crop will be cut for earlage (Earlage is high moisture corn grain, and dry cobs, husks and, in some cases, a portion of the stalk that is cut and ensiled.); and (3) Silage or forage will be packed in ag bags.
42.	PAR. 85 J	Added: "When the reason for the zero appraisals is non-emerged seed, the adjuster must verify that the crop was initially planted (i.e., through visual subsoil inspection that the seed has been planted, or other documented evidence acceptable to the AIP that confirms the crop was planted)."

SUMMARY OF CHANGES/CONTROL CHART (Continued)

43.	PAR. 88 E (1) (b)	Revised to allow each RSA to be a minimum size of either: (1) 10 feet wide and the length of the field, or (2) Equivalent square feet of 10 ft wide X the length of the field, provided it meets the criteria in subparagraph (b) 2 a and b.
44.	PAR. 88 G (2)	Added where to obtain the appraisal samples from the Representative Sample Areas.
45.	PAR. 89 A	Revised to indicate that the "Bypassed Acreage" procedures were applicable only to the crops that have the definition of "Bypassed Acreage" within the crop provisions. Added processing pumpkins because it has the definition of "Bypassed Acreage" in its crop provisions, and deleted chile pepper and sugar beets since they do not.
46.	PAR. 89 I	Deleted chile peppers because "bypassed acreage" procedures do not apply to chile peppers. Added processing pumpkins.
47.	PAR. 90 A (1)	Added "third party sales" so it reads Acceptable evidence of third-party sales."
48.	PAR. 91 B (2) (b)	Revised from "unit number and FSN" to "unit and/or field identification from which the production was harvested that can be correlated to the unit number(s)." Also, indicated that if the field identification cannot be correlated with a unit number for the crop/county, the production must be considered commingled and the procedures in paragraph 126 apply.
49.	PAR. 91 H	Added the required documentation the AIP needs from an insured so that not all of the production on a settlement sheet is counted as production to count when part of the production delivered to fulfill the insured's speculative contract was actually bought from another individual because, due to an insured cause, the insured did not have enough production to fulfill the contract.
50.	PAR. 92 B	Added that AIPs are to encourage producers to have any quantity of production intended for feed measured (by the AIP, FSA, or other party acceptable to the AIP) to determine the amount of production/moisture and quality before feeding.
51.	PAR. 93	Added after "(with available satisfactory scales records)" the following: "unless load records or combine monitoring records as allowed by PAR. 105 are applicable."
52.	PAR. 93 A (6)	Added that in the following situation when accurate records are provided for such production, such production should not be considered as production to count: "Harvested production from other entities when stored with the insured's production within one storage facility, and acceptable weight records are provided that identifies the production not to count for the other entities to the AIP's satisfaction."

SUMMARY OF CHANGES/CONTROL CHART (Continued)

53.	PAR. 96	Updated the subparagraphs and examples within to agree with the 2010 crop year Quality Statements in the Special Provisions of Insurance.
54.	PAR. 96 B (1)	Clarified that the insured or insured's authorized representative are not considered disinterested third parties. Also, added: "Elevator or processor personnel at the buying point that are trained to pull samples are considered disinterested third parties."
55.	PAR. 96 C (1) (d) 1 a	Added buckwheat to the list of crops that are allowed to have blended samples.
56.	PAR. 96 D (2) (b) 1	Clarified by adding "single" in front of sample.
57.	PAR. 96 G	Added after "test weight" in the last sentence, the following: "in whole pounds, determine if the buyer has the weight in tenths of a pound."
58.	PAR. 96 H (7) (b) 1 b (ii)	Clarified for what crops the U.S. Sample Grade DF is applicable, and what other pre-established DFs can be used with the DF for U.S. Sample Grade.
59.	PAR. 96 H (8) (a)	Added instructions for when the RIV is determined not to be reasonable.
60.	PAR. 96 H (11) (h)	Revised and clarified the procedures and examples throughout this subparagraph for determining the RIV when the crop was under a speculative type contract (not processor contracts). Also, added for specialty type barley and soybeans these procedures apply when either speculative or processor type contracts are in effect.
61.	PAR. 96 J (2) (a) 1 b	Added that the insured's agreed upon method of destruction must be in writing.
62.	PAR. 101 E	Added "and Test Weight Factor" to the title, and indicated the specific instructions for determining the test weight and test weight factor for corn silage is in the Corn LASH, and for sorghum silage in the Sorghum Silage LASH.
63.	PAR. 101 F (3) (b)	Removed "ground grain, cracked grain, etc."
64.	PAR. 101 F (4)	Added the following: "For corn insured as grain that is to be harvested and either ground and stored as corn and cob meal (ground ear corn) or chopped for earlage, a pre-harvest appraisal is required to establish the production. Also, added a reference to paragraph 85.
65.	PAR. 101 G and H	Deleted the Table of Standard Bushel Weights that was in subparagraph G because this information is now found in Exhibit 21. Deleted subparagraph G because it is not needed due to the instructions in paragraph 101 E.
66.	PAR. 102	Updated the subparagraphs in paragraph 102, to agree with the Quality Statements in the Special Provisions of Insurance.

SUMMARY OF CHANGES/CONTROL CHART (Continued)

67.	PAR. 102 J	Added processor where appropriate in the introductory paragraph and in subparagraphs (1) (a), (b), and (c).
68.	PAR. 102 K	Revised the procedures for a discrepancy between the test results of a sample taken by the AIP and the one used by the disinterested third party buyer or commercial storage facility.
69.	PAR. 104 B	Reformatted the subparagraph numbers because what was formally item (2) was deleted. The deleted subparagraph was duplicative of what is stated in paragraph 104 A (1) (c).
70.	PAR. 104 C	Revised requirements for acceptable Scale Weight Tickets/Records.
71.	PAR. 104 F	In subparagraph (a), added after “stored,” the following: “(or used (processed) and stored),” and added in subparagraphs (a) and (b), specific subparagraph references.
72.	PAR. 105 B (1)	Clarified in the introductory paragraph that AIPs may authorize insureds orally or in writing to keep load records, structure markings, or combine monitor records for the purpose of separating multiple units stored in the same structure. Also, in subparagraph (a), added the written criteria and instructions the AIPs are to provide insureds has to be provided annually. In subparagraph (b), after “mycotoxin,” added, the following: “other than Vomitoxin” because samples for determining Vomitoxin do not have to be obtained prior to the production being placed in storage.
73.	PAR. 105 D	Revised all subparagraphs to allow the insured to record just the field identification number instead of both the unit and field identification number. However, the adjuster must be able to correlate the field identification with the unit numbers for the crop and current crop year. If they cannot be correlated, the production must be considered commingled, and PAR. 126 is applicable.
74.	PAR. 106	Moved the contents that was in paragraph 106 to paragraph 103 B. Added procedures in paragraph 106 for grain stored in grain storage bags.
75.	PAR. 110 C (8)	Added that this was applicable to all storage structures except a grain bag.
76.	PAR. 116	Added buckwheat and the appropriate conversion factor to the Conversion Factor Chart.
77.	PAR. 124 A and B	Indicated that this paragraph does not apply to determinations made by FCIC or any claim where FCIC is directly involved in the claim process or directs the AIP in the resolution of the claim.
78.	PAR. 125 A (3)	Added the reference to FAD-60, dated November 1, 2006.
79.	PAR. 125 A (5)	Added procedures for Tobacco Fire Damage in a Barn and renumbered the remaining subparagraphs accordingly.

SUMMARY OF CHANGES/CONTROL CHART (Continued)

80.	PAR. 125 E	Updated chart to agree with new Tobacco policy and respective sections.
81.	PAR. 126 C (5) (b) 1	Added buckwheat to the list of crops.
82.	PAR. 127 D (1)	Added to the unreported unit procedures, instructions for converting the production from the unreported unit to the unit of measure of the reported units when the unreported unit is a different unit of measure (and was harvested with that unit of measure). Also, provided an example of an unreported unit with corn silage type and reported units with corn grain type (both types insurable in the county).
83.	PAR. 127 D (2)	Clarified that the insured's share of production from unreported unit(s) is net production. Also, added a footnote defining net production.
84.	PAR. 127 E (1) and (2)	Clarified that the apportioned amount of production is net production. Also, added a footnote defining net production.
85.	PAR. 127 E (3)	Added instructions for calculating the revenue for CRC and for RA for the allocated amount of production from the unreported unit.
86.	PAR. 127 E (4)	Added instructions for crops using the new Production Worksheet (PW) for the 2010 crop year and for the 2011 crop year (and succeeding crop years) as the new PW is added to the other crop LASHs.
87.	PAR. 130 A (1)	Revised to indicate that emergency tillage is a recognized good farming practice in some geographical areas to distinguish that it may not be a recognized good farming practice in all geographical areas. Also added: "In geographical areas where emergency tillage is a recognized good farming practice to control severe wind erosion, . ."
88.	PAR. 131 A (1) (h)	Clarified that this would result in an overpayment.
89.	PAR. 131 A (1) (i)	Added the following: "A basic unit structure is determined to be incorrect," as another reason to correct a claim.
90.	PAR. 131 A (2)	Added "or less" to this sentence to indicate the claim cannot be corrected if the insured sells more or less production than was determined from the measured production unless. . . "
91.	PAR. 137 A (6) (a)	Added the insured must write beside each load on the settlement sheet, the unit numbers and/or field identification from which this production came. If only a field identification is shown, the adjuster must be able to verify that the field identification can be correlated with the unit numbers for the crop/county for the current crop year.
92.	PAR. 137 A (7)	Added that factors that affect quality must be determined by a licensed grain grader as specified in paragraph 96 E and that a verifiable document (e.g., grade certificate) from a licensed grader must be included with the Simplified Claim Process (SCP) form. Also, added that the grade slip must include the insured's name, crop, and crop year.

SUMMARY OF CHANGES/CONTROL CHART (Continued)

93.	PAR. 137 A (10)	Revised to indicate that the insured must submit all required documentation (e.g., maps, settlement sheets, etc.) by the deadline date for submitting claims. If the insured fails to submit the SCP claims and all required documents by that date, the claim must be denied in accordance with the Basic Provisions.
94.	PAR. 137 E	Revised to add, that the SCP Reviews are applicable unless this review is removed from Appendix IV of the Standard Reinsurance Agreement (SRA). Also, added footnote stating that a "Field Inspection is as defined in Appendix IV of the SRA.
95.	PAR. 139 B	Added buckwheat to the list of crops having automatic late planting coverage.
96.	PAR. 139 C (1) (c)	Revised to remove Guaranteed Production (GP) since the crop program is now called Tobacco.
97.	PAR. 139 C (1) (d)	Deleted this paragraph since the quota tobacco crop provisions no longer exist.
98.	PAR. 143 (1)	Added "or any claim where FCIC is directly involved in the claims process or directs the AIP in the resolution of the claim, the insured can request either mediation or an administrative review or both."
99.	Exhibit 1	Definitions: (1) Added "Bypassed Acres;" and (2) In accordance with the Farm Bill Amendment (10-Farm Bill), revised definitions for Catastrophic Risk Protection, Native Sod, Organic Farming Practice, and Prairie Pothole National Priority Area. Added a definition for "Tilled."
100.	Exhibit 2	Removed "pilot" from Cabbage since cabbage was made into a permanent program, effective for the 2010 crop year. Added: ARH Citrus, GRP Oysters, Quarantine Endorsement, Enterprise Unit Amendment, and Sanctions Amendment. Deleted: California Citrus Dollar Plan Pilot since it was terminated, and Guaranteed Production Tobacco and Quota Tobacco since these crop provisions were terminated and replaced with the Tobacco Crop Provisions, effective for the 2010 crop year. Also, updated other policy provisions numbers and other information due to revised policies, as applicable.
101.	Exhibit 3	Causes of Loss. Removed California Dollar Citrus from Decline and Price and added ARH plans of insurance to Decline in Price. Also, removed Fresh Market Sweet Corn from Wildlife, Earthquake, and Volcanic Eruption causes of loss.

SUMMARY OF CHANGES/CONTROL CHART (Continued)

102. Exhibit 4	Updated to remove “pilot” from Cabbage. Added Apiculture Rain Index plan, Apiculture Vegetative Index plan, and ARH Citrus, and unit of measure for these insurance programs. Removed California Dollar Plan (Pilot) since it is now obsolete. Added standard test weight for millet. Removed standard test weight from crops that have pound unit of measure. Removed “GRP” from Pasture, Rangeland, Forage Pilot for both the Rainfall Index plan and Vegetative Index plan. Updated unit of measure for Florida Citrus. Removed “Guarantee Production” in front of Tobacco and “Quota Tobacco” since the Guaranteed Production Tobacco and Quota Tobacco Crop Provisions were terminated and replaced with the Tobacco Crop Provisions for the 2010 crop year.
103. Exhibit 9	Updated FSA Crop Status Codes and their explanations with FSA’s most current information.
104. Exhibit 15, D, item 12	Updated the second paragraph to indicate that the insurance provider will annually provide written criteria and instructions for the insured to follow.
105. Exhibit 15 D, item 23	Deleted the word “or loss” in the second check-box, so it reads: “This is a notice of damage only . . .”
106. Exhibit 16	Added the new Production Worksheet that is required for Canola/Rapeseed, the Small Grains crops (barley, buckwheat, flax, oats, rye, and wheat), Safflowers, Sunflowers, Corn, Grain Sorghum, and Soybeans for the 2010 crop year and the Continuation Sheet for the new Production Worksheet. Removed the pages containing the Privacy Act and Non-discrimination Statements.
107. Exhibit 19	Revised instructions for Hedgerow or Border Planting Patterns.
108. Exhibit 20	Updated to agree with the new Quality Statements in the Special Provisions of Insurance for the 2010 crop year.
109. Exhibit 21	Removed corn-and-cob meal (ground ear corn), cracked corn, and corn meal. Added dry beans, dry peas, popcorn, rice, safflowers, sunflower seed (oil), sunflower seed (non-oil), and wild rice; and the standard test weight for each of these crops. Also, added footnotes for: (1) crops having pound unit of measure, and (2) for corn to be harvested as corn-and-cob meal (ground ear corn) or chopped for earlage, a reference to paragraph 85. Additionally, added subparagraph C for crops having a pound unit of measure, to explain how to convert bushels to pounds if a settlement sheet shows bushels rather than pounds.
110. Exhibit 22	Added the form standards for Simplified Claim Process in this Exhibit.
111. Exhibit 23	Changed the Index from Exhibit 22 to 23 and updated accordingly.

SUMMARY OF CHANGES/CONTROL CHART (Continued)

CONTROL CHART FOR: LOSS ADJUSTMENT MANUAL STANDARDS HANDBOOK						
	SC Page(s)	TC Page(s)	Text Page(s)	Exhibits	Date	Directive Number
Remove	Entire Handbook				02-2009 06-2009	FCIC-25010 FCIC-25010-1
Current Index	1-12	1-8	1-388	1(389-413)	02-2010	FCIC-25010
				2(414-425)	02-2010	FCIC-25010
				3(426-428)	02-2010	FCIC-25010
				4(429-431)	02-2010	FCIC-25010
				5(432-433)	02-2010	FCIC-25010
				6(434-435)	02-2010	FCIC-25010
				7(436)	02-2010	FCIC-25010
				8(437)	02-2010	FCIC-25010
				9(438-440)	02-2010	FCIC-25010
				10(441-442)	02-2010	FCIC-25010
				11(443-447)	02-2010	FCIC-25010
				12(448-453)	02-2010	FCIC-25010
				13(454)	02-2010	FCIC-25010
				14(455-463)	02-2010	FCIC-25010
				15(464-466)	02-2010	FCIC-25010
				16(467-469)	02-2010	FCIC-25010
				17(470-472)	02-2010	FCIC-25010
				18(473)	02-2010	FCIC-25010
				19(474-478)	02-2010	FCIC-25010
				20(479-488)	02-2010	FCIC-25010
				21(489)	02-2010	FCIC-25010
				22(490-494)	02-2010	FCIC-25010
				23(495-504)	02-2010	FCIC-25010

(RESERVED)

LOSS ADJUSTMENT MANAUL STANDARDS HANDBOOK

TABLE OF CONTENTS

PART 1 GENERAL INFORMATION

Page

1 Purpose....1
2 Special Instructions....1
3 Operating Policy....3
4 Abbreviations or Acronyms....5
5 Documents/Procedures....6
6 FCIC's RMA Product Administration and Standards Division Responsibilities....7
7 AIP Responsibilities....7
8 Loss Adjustment Responsibilities....13
9 Insured's Responsibilities....17

PART 2 INSPECTION DUTIES

SECTION 1 PRODUCER ELIGIBILITY AND ENTITIES....19

10 General Information....19
11 Insurance Provisions....19
12 Insurance Qualifications....21
13 Verifying and/or Determining Insurable Share....22
14 Entities....29

SECTION 2 INSURED'S CONTRACT INFORMATION....41

15 Contract Information and Verification....41
16 Application....41
17 Contract Changes....41
18 Written Agreement....42
19 APH Form (Production and Yield Report)....42
20 Options and Endorsements....42
21 Acreage Report....43
22 Hail and Fire Exclusion....48
23 Assignment Of Indemnity....51
24 Transfer of Right to an Indemnity....51
25 Notice of Prevented Planting or Notice of Damage or Loss....52
26 Power of Attorney....54

SECTION 3 REVISED ACREAGE REPORTS....55

27 General Information....55
28 Revised Acreage Reports – On or Before the ARD....56
29 Revised Acreage Reports - After the ARD....57
30 Revised Acreage Reports - Acreage Report Reviews....67
31 Revised Acreage Reports - Examples....67

TABLE OF CONTENTS (Continued)

PART 2 INSPECTION DUTIES (Continued)

Page

SECTION 4 UNREPORTED ACREAGE 70

32 Unreported Acreage Discovered After Acreage Report Filed for the Crop 70
33 Unreported Acreage Which May Be Late Planted 71

SECTION 5 ACTUARIAL DOCUMENTS AND VERIFICATION 72

34 Usage 72
35 Actuarial Classification - Document Precedence 73
36 Using Actuarial Documents for Verification 73

SECTION 6 INSURABLE FARMING PRACTICES 73

37 General Information 73
38 Continuous Cropping Practice 74
39 Summerfallow Practice 74
40 Irrigated Practice 75
41 Non-irrigated Practice 88
42 Initial Planting Practice (Intertilled Between Rows (IBR), Not Intertilled Between Rows (NIBR), etc.) 89
43 Organic Farming Practice 89

SECTION 7 INSURABLE ACREAGE 93

44 Verifying Insurable Acreage 93

SECTION 8 INSURED CROP 99

45 Verifying Insured Crop 99

SECTION 9 FIRST (1st), SECOND (2ND), AND SUBSEQUENT CROPS PLANTED ON SAME ACREAGE IN THE SAME CROP YEAR 101

46 First (1st) Insured Crop Planted and Second (2nd) Crop 101
47 First (1st) Insured Crop Prevented From Planting and Second (2nd) Crop 108
48 Additional Information About Reduction of Payments and Premium Due to Second (2nd) Crop 108
49 Indemnity Payment and PP Payment as They Relate to Double Cropping History 109
50 Subsequent Planted Crops 115

TABLE OF CONTENTS (Continued)

PART 2 INSPECTION DUTIES (Continued)

SECTION 9 FIRST, SECOND, AND SUBSEQUENT CROPS PLANTED ON SAME ACREAGE IN SAME CROP YEAR (Continued)

Page

51 Loss Adjustment 116
52 Claim Form Entries Relative to First (1st) Insured and Second (2nd) Insured Crops 117
53 First (1st) and Second (2nd) Crop Questions and Answers 129

SECTION 10 UNIT DETERMINATION 131

54 Unit Verification 131
55 Unit Structures 132

SECTION 11 USDA FARM PROGRAM COMPLIANCE 143

56 Controlled Substance Violation 143

SECTION 12 HAZARDS CONNECTED WITH PESTICIDES OR OTHER CHEMICAL SUBSTANCES 143

57 Pesticide or Other Chemical Substance Hazards 143

SECTION 13 FSA OFFICE 143

58 FSA Information 143
59 Information Requests To FSA 144
60 Obtaining the Requested Documents From FSA 145
61 Verification Materials/Information 146

PART 3 ON-THE-FARM INSPECTION

SECTION 1 TYPES OF INSPECTIONS 147

62 General Information 147
63 Indemnity Inspection - Preliminary 147
64 Replant Payment Inspection 148
65 Replanting Provision Issues 155
66 Purpose of the Certification Form 161
67 Indemnity Inspection - Final (Including No Indemnity Due Claims or Denied Claims) 164
68 Indemnity Inspection (Final) - End of the Insurance Period 167

TABLE OF CONTENTS (Continued)

PART 3 ON-THE-FARM INSPECTION (Continued)

SECTION 1 TYPES OF INSPECTIONS (Continued)

Page

69 Indemnity Inspection (Final) - Delayed Notice of Damage or Loss and/or Delayed Claim 170
70 Production Pre-Measurement Service Inspection 178
71 Growing Season Inspection 180
72 Pre-harvest Inspection 183
73 Acreage Report Review Inspection 184
74 Crop Inspection To Determine Acceptance of Misreported Acreage Report Information For Insurance 185
75 Interest Payment on Claims 187

SECTION 2 VERIFYING THE CAUSE OF LOSS 187

76 General Information 187
77 Hail and Fire Exclusion 188
78 Uninsured Causes 188
79 Abandon Versus Not Following A Good Farming Practice 190

SECTION 3 ACREAGE DETERMINATION 191

80 General Information and Methods 191
81 Wheel Measuring Method and Formulas 197
82 Determining Insured Acres From Skip-Row Planting Patterns For All Crops (Except Cotton) 202

SECTION 4 ESTABLISHING PRODUCTION 204

83 General Information 204
84 Verifying Total Production - Appraised or Harvested 205
85 Appraisals 208
86 Appraisal Method Variations 214
87 Appraisals Involving Average Row-Width Measurements 214
88 Representative Sample Area (RSA) Appraisals 215
89 Bypassed Acreage 223
90 Verifying Harvested Production 226
91 Verifying Sold or Commercially Stored Production 227
92 Verifying Fed Production 231
93 Verifying and Accounting for Production Not to Count 233
94 Gleaned Acreage 234

TABLE OF CONTENTS (Continued)

PART 3 ON-THE-FARM INSPECTION (Continued)

Page

SECTION 5 ADJUSTMENTS TO PRODUCTION 238

95 General Information 238
96 Quality Adjustment (QA) 239
97 Adjustments for Moisture 265
98 Adjustments for Foreign Material (FM) and if allowed, Dockage 266
99 Consolidating Moisture or FM Percentage Entries On the Claim Form 271
100 Averaging Moisture or FM Percentage Entries On the Claim Form 272
101 Test Weight and Test-Weight Factor 273
102 Quality Adjustment When Production Contains Mycotoxins or Other Substances or Conditions At Levels Injurious to Human and Animal Health 275

SECTION 6 RECORDING AND DETERMINING THE QUANTITY OF FARM-STORED PRODUCTION 296

103 Determining and Recording Farm-Stored Production That Requires Measurements 296
104 Production Weighed and Farm-Stored 298
105 Authorization to Accept Insureds' Structure Markings, Load Records, and Combine Monitor Records. 302
106 Recording and Converting Measurements 309
107 Rounding Rules 311
108 Table to Convert Fractions to Percent Figures 313
109 Metric Conversion Table 313
110 Recording Farm-Stored Production on the Claim Form 314
111 Farm-Stored Production-to-Count Formula 317
112 Gross Cubic Feet Formulas By Structure 319
113 Unusual Storage Configurations: Measurements and Computations 323
114 Round Bin Chart 331
115 Net Cubic Feet Formula (Cubic Feet Deductions) 331
116 Converting Volume to Bushels, Hundredweight, or Pounds 332

PART 4 UNUSUAL/CONTROVERSIAL CASES AND SPECIAL CLAIMS PROCEDURES

SECTION 1 GENERAL INFORMATION 333

117 General Procedures to Follow When Involved With Unusual or Controversial Cases 333
118 Report Writing - How to Document Findings 333
119 Points to Remember While Dealing With Problem Cases 334
120 Controversial Claim Procedure 336

TABLE OF CONTENTS (Continued)

PART 4 UNUSUAL/CONTROVERSIAL CASES AND SPECIAL CLAIMS PROCEDURES (Continued)

Page

SECTION 2 UNUSUAL/CONTROVERSIAL CASES 337

121 Controversial Claim: Uninsured Causes of Loss 337
122 Claims for Indemnity Involving Suspected Concealment or Misrepresentation 344

SECTION 3 SPECIAL CLAIMS PROCEDURES 344

123 Subrogation - Third Party Cause of Loss 344
124 AIP Mediation and Arbitration 345
125 Claims Involving Fire Damage 346
126 Commingled Production 355
127 Unreported Units 362
128 Claims Involving Severe Insect, Disease, or Weed Infestation 366
129 Airplane- or Broadcast-Seeded Barley, Oats, Rye, or Wheat 366
130 Severe Wind Erosion 367
131 Corrected Claims 369
132 Documenting Insured's Death, Judicial Declaration of Incompetency, or Change or Termination of a Partnership 371
133 Bankruptcy 372
134 Modification of Requirement to Destroy Crop Before Indemnification 373
135 Chemical Damage Due to Adverse Weather Condition 374
136 AIP Good Farming Practice (GFP) Determinations 375
137 Simplified Claim Process (SCP) 377

PART 5 LATE PLANTING COVERAGE

138 General Information 381
139 Late Planting Coverage 381

PART 6 FCIC REVIEWS, DETERMINATIONS, INTERPRETATIONS, AND APPEALS

140 Good Farming Practice (GFP) Administrative Review 385
141 Large Claim Reviews and FCIC Participation 385
142 FCIC Policy and Procedural Interpretations 386
143 Administrative Reviews or Appeals 386

EXHIBITS

Page

1 Definitions 389
2 Crop Policy Information 414
3 Causes of Loss Names and Codes 426

TABLE OF CONTENTS (Continued)

EXHIBITS (Continued)

		Page
4	Units of Measure of Production, by Crop	429
5	Entities and Documentation Chart	432
6	Hail/Fire Exclusion Appraisal Factor Chart	434
7	FSA Documents	436
8	FSA Abbreviations on Aerial Photos	437
9	FSA Codes Used on FSA-578	438
10	Claim Checklist Form Standards	441
11	Certification Form Standards and Completion Instructions	443
12	Self-Certification Replant Worksheet Standards and Completion Instructions	448
13	Square Root Table	454
14	Round Bin Conversion Chart	455
15	Notice of Prevented Planting or Notice of Damage or Loss Form Standards	464
16	Production Worksheets Continuation Form Standards	467
17	FGIS (or Applicable State or Other Entity's) FM and Dockage Definitions	470
18	Calculation Sequence of Loss Adjustment Factor (LAF), Misreported Information Factor (MIF), and 1st/2nd Crop Reduction	473
19	Instructions for Determining Tree/Vine/Bush Acres	474
20	Settlement of Claim When Insured has Less than 100% Share	479
21	Standard Bushel (Standard Test) Weights for Bushel Unit of Measure	488
22	SCP Form Standards	489
22	Index	495

TABLE OF CONTENTS (Continued)

(RESERVED)

PART 1 GENERAL INFORMATION

1 PURPOSE

A This handbook is the official publication of the Risk Management Agency (RMA) for all levels of insurance provided under the Federal Crop Insurance program unless a specific crop (or commodity) loss adjustment standards handbook (LASH) or insurance standards handbook or guide for a specific plan of insurance (e.g., Group Risk Plan of
*** insurance, Rain Index or Vegetation Index plans of insurance, etc.) specifies that none or only specified parts of this handbook apply. Insurance policies available under the Federal crop insurance program are sold and serviced by private insurance companies (hereafter called AIPs) reinsured by Federal Crop Insurance Corporation (FCIC).

B If an AIP is audited by a government agency or is selected for an RMA compliance review, the applicable procedures in this FCIC-issued handbook will be the basis for all determinations.

C This handbook Identifies standards (requirements):

(1) For general loss adjustment (not crop-specific) for adjusting losses in a uniform and timely manner,

(2) For the general loss adjustment process (e. g., assignment of indemnities, notices of loss, acreage determination, revising acreage reports, etc.);

(3) For completing policy-related reviews for the crop year (e.g., acreage report reviews, growing season inspections, etc.); and

(4) That are not adjuster specific, but are an overall part of the loss adjustment process **for which the AIP (rather than the adjuster) is responsible**; e.g., procedural standards for requesting appraisal deviations and modifications, etc.

D The standards contained in this handbook are to be used with:

(1) The insurance standards handbooks or guides for a specific plan of insurance, unless these handbooks or guides specify otherwise, as stated in A above.

(2) Prevented Planting Standards Handbook (when applicable), and

(3) Crop specific LASH (e.g., Almond Loss Adjustment Standards Handbook) unless specified otherwise, as stated in A above.

2 SPECIAL INSTRUCTIONS

A Titles

Specific titles of AIPs' approving officials for which certain events, function, etc., would require the approving official's approval are not indicated in this handbook. However, for specific events, functions, etc., that require FCIC approval, titles of approving offices (or officials) are stated.

B Forms and Specific Entry Instructions

(1) Forms. AIP forms must meet the standards stated in the Document and Supplemental Standards Handbook (DSSH), FCIC-24040. As stated in FCIC-24040, the loss adjustment forms shown in the LAM and the individual LASHs serve as the form standards for these forms. The Privacy Act Statement and the Non-Discrimination Statement must be utilized as stated in the FCIC-24040. The current Non-Discrimination Statement and Privacy Act Statement can be found on the RMA website at http://www.rma.usda.gov/regs/required.html or successor website. Any changes to the forms shown in updated FCIC LAM standards or FCIC crop LASHs require the same changes on AIP forms or trade-association-developed forms used by AIPs.

(2) When for a particular loss adjustment form, the **item numbers** for the entry instructions in the FCIC-issued loss adjustment standards handbooks **does not correlate** with **the item numbers on the AIP's form**, AIPs may change the item numbers (only) for the entry instructions to agree with the item numbers on their form.

C Procedures. The Standard Reinsurance Agreement (SRA) states: "Procedures mean the applicable handbooks, manuals, bulletins, memorandums or other directives issued by FCIC related to the eligible crop insurance contract and the Agreement." Procedures issued by FCIC means issued by the Risk Management Agency (RMA) for FCIC. Section IV. F 1 b. of the SRA states: "AIPs must use contracts, standards, procedures, methods, and instructions as authorized by FCIC in the sale and service of eligible crop insurance contracts." Any FCIC–issued procedures take effect on the approval date of the procedure. For handbooks, the approval date is always found at the top of the SC 1 page.

D Items/provisions or plans of insurance not applicable to Catastrophic Risk Protection (CAT) coverage:

(1) Written agreements.

(2) Hail-fire exclusion (also not applicable if additional coverage is less than 65/100 or equivalent coverage).

(3) High-risk land exclusion.

(4) Options or endorsements that extend coverage under the crop policy; (Examples of options/endorsements that extend coverage and those that do not, are as follows: (1) The Potato Quality Option extends the coverage from what is found in the crop policy by providing for loss of production due to quality; (2) The Sorghum Silage Endorsement does not extend coverage, it sets up coverage; and (3) The Frost Protection Option does not extend coverage, it reduces the premium because the frost protection provided by the insured reduces the risk of loss.)

(5) Replanting payments.

(6) Optional units.

(7) Crop Revenue Coverage.

(8) Revenue Assurance.

(9) Adjusted Gross Revenue (AGR) and AGR-Lite.

(10) Group Risk Income Protection.

E Definitions, Codes, and Units of Measure

(1) Exhibit 1 contains definitions.

(2) Exhibit 2 contains crop names and codes and other policy information by crop. Exhibit 2 also specifies, for the purpose of these procedures, whether the crop listed is for the 2010 or 2011 crop year.

(3) Exhibit 3 contains cause of loss names and codes; and

(4) Exhibit 4 contains units of measure, by crop.

3 OPERATING POLICY

A Regulations or Procedural Conflict

If there is a conflict between any FCIC-issued regulations, provisions, or procedures, the order of precedence is listed in PAR. 3 D. All FCIC regulations, provisions, procedures and interpretations of FCIC regulations, provisions, and procedures issued by RMA listed in PAR. 3 D take precedence over policy provisions, procedures or any clarification, interpretation of policy provisions or procedures or other materials distributed by an association or AIP.

B Procedural Questions

Questions regarding responsibilities or loss adjustment procedures are to be directed first to the AIP, then through appropriate channels (through the AIP) to the RMA's Product Administration and Standards Division. For disputes involving procedural interpretations, refer to PAR. 142.

C These Standards Remain in Effect Until Superseded

The issuance of an entire handbook will replace a previous handbook. Handbook slipsheets, Final Agency Determinations, or RMA Manager's Bulletins that change any part of this handbook will supersede that part of the handbook. AIPs may find it necessary to provide additional internal guidelines or procedures for their loss adjustment functions, such as where completed loss forms are forwarded, specifying specific form numbers and item numbers, etc. Additional guidelines or procedures must comply with FCIC issued regulations, standards, and procedures.

D Crop Insurance Document Precedence

The most important document is listed first with the order of precedence being listed from top to bottom.

(1) Federal Crop Insurance Act, as amended (7 U.S. C. 1501 et seq.) (Act) and any Final Agency Determination (FAD) interpreting the Act.

(2) The Catastrophic Risk Protection Endorsement (CAT Endorsement), as applicable, and any FAD interpreting the CAT Endorsement.

(3) Written Agreement, as applicable.

(4) The Special Provisions of Insurance and other actuarial documents in the following order of precedence:

(a) SPOIs.

(b) FCI-32: Supplement (to Classification Listing).

(c) FCI-32: Classification List.

(d) FCI-33: Map Supplement.

(e) FCI-33: Actuarial Map.

(5) Crop endorsement/options and any FAD interpreting the crop endorsement/options if published in 7 C.F.R. part 457.

(6) Crop provisions and any FAD interpreting the crop provisions.

(7) Common Crop Insurance Policy (Basic Provisions) and any FAD interpreting the Basic Provisions.

(8) Administrative regulations (7 CFR part 400) and any FAD interpreting the administrative regulations.

(9) Manager's Bulletins and any interpretation of procedures therein (refer to MGR.05-18, Interpretation of Procedures).

(10) Prevented Planting Loss Adjustment Standards Handbook and any interpretation of these procedures (refer to MGR.05-18, Interpretation of Procedures).

(11) Crop Insurance Handbook and other applicable Underwriting Guides for a specific commodity or plan of insurance and any interpretation of these procedures (refer to MGR.05-18, Interpretation of Procedures).

(12) Loss Adjustment Manual (LAM) Standards Handbook and any interpretation of these procedures (refer to MGR.05-18, Interpretation of Procedures).

(13) Crop loss adjustment standards handbooks and any interpretation of these procedures (refer to MGR.05-18, Interpretation of Procedures).

(14) PM Informational Memorandums.

(15) Informational Memorandums.

EXAMPLE: (1) is the Act and any FAD interpreting the Act;(2)-(7) policy provisions and any FAD interpreting items (2), (5), (6), or (7); (8) regulations and any FAD interpreting the regulations; (9)-(12) are procedures and any Interpretation of Procedures; and (13)-(14) is information.

4 ABBREVIATIONS OR ACRONYMS

AIP	Approved Insurance Provider
ARD	Acreage Reporting Date
APH	Actual Production History
AD	Actuarial Documents
AGR	Adjusted Gross Revenue
CAT	Catastrophic Risk Protection
CCC	Commodity Credit Corporation
CCD	Contract Change Date
CCIP	Common Crop Insurance Policy (Basic Provisions)
CIH	Crop Insurance Handbook
CES	Cooperative Extension Service (State and County Offices under CSREES)
CFO	Compliance Field Office (of Risk Management Agency)
CSREES	Cooperative State Research, Education, and Extension Service
DAS	Data Acceptance System
DF	Discount Factor
DSSH	Document and Supplemental Standards Handbook
EIN	Employer's Identification Number
EOIP	End of the Insurance Period
FAC	Following Another Crop
FAD	Final Agency Determination
FCIC	Federal Crop Insurance Corporation
FSA	Farm Service Agency
FSN	Farm Serial Number
FCI-35	Coverage and Rate Table
FGIS	Federal Grain Inspection Service (of GIPSA)
FM	Foreign Material
GIPSA	Grain Inspection, Packers, and Stockyards Administration
GFP	Good Farming Practice
GRP	Group Risk Protection
H	Harvest
LAC	Loss Adjustment Contractor
LAF	Liability Adjustment Factor
LAM	Loss Adjustment Manual
LASH	Loss Adjustment Standards Handbook (any of the individual crop LASHs)
LPP	Late Planting Period
MI	Misreported Information
MIF	Misreported Information Factor
MPCI	Multiple Peril Crop Insurance
NAP	Non-Insured Assistance Program
NFAC	Not Following Another Crop
NRCS	Natural Resources Conservation Service
PAR	Paragraph
PASD	Product Administration and Standards Division (of Risk Management Agency)
PM	Product Management
PP	Prevented Planting
PW	Production Worksheet (also known as claim for indemnity form or claim form)
QAF	Quality Adjustment Factor
RIV	Reduction In Value
RMA	Risk Management Agency
RMSD	Risk Management Services Division (of Risk Management Agency)
RO	Regional Office (of Risk Management Agency)
RSA	Representative Sample Area

RSC	Representative Sample of Crop
SCD	Sales Closing Date
SCP	Simplified Claim Process
SBI	Substantial Beneficial Interest
SPOI	Special Provisions of Insurance
SRA	Standard Reinsurance Agreement
SSN	Social Security Number
TIN	Tax Identification Number
UH	Unharvested
USDA	United States Department of Agriculture
USGSA	United States Grain Standards Act
USWA	United States Warehouse Act
ZMV	Zero Market Value

5 DOCUMENTS/PROCEDURES

A What Can Be Used. Refer to PAR. 2 B and C above for forms and procedures. Other than company name and policy number, policies issued by companies must be exactly as those published in the Federal Register, and thereafter published in the Code of Federal Regulations.

B Documents and Procedures. Forms (and/or data processed from forms) and manuals necessary for loss adjustment include, but are not limited to:

(1) Data from accepted applications and acreage reports. This data would include, (but is not limited to) the following: insured's name as accepted on the application, authorized representative, price election, level of coverage, SSN or EIN, approved APH yields, acres, types, practices, shares, etc., reported for the crop;

(2) Insurance policy (basic provisions, crop provisions, applicable endorsements or options, Written Agreement, if applicable, SPOIs, and FADs) applicable to the inspection;

(3) Actuarial documents;

(4) RMA bulletins, information memorandums, other related memorandums;

(5) FCIC-25010, LAM and any Interpretation of Procedures (MGR.05-18);

Due to the nature of some insurance products such as livestock, certain revenue products, etc., there may be other issuances of underwriting guidelines (procedures) or general loss adjustment procedures, specific to each of those insurance products that are used in lieu of all or parts of the LAM.

(6) Specific crop LASH and any Interpretation of Procedures (MGR.05-18);

(7) Notice of Prevented Planting or Notice of Damage or Loss; and

(8) Forms (or data from forms) meeting FCIC-issued form standards (refer to PAR. 2 B) applicable to the type of inspection and crop(s) being inspected; e.g., appraisal worksheets, Certification Form, claim forms, etc.

6 FCIC's RMA PRODUCT ADMINISTRATION AND STANDARDS DIVISION RESPONSIBILITIES

A Standards. Establish, issue, and maintain the minimum policy, underwriting, and loss adjustment standards.

B Form Standards. Establish, issue, and maintain (including completion instructions) form standards to be used by the AIPs. Also, refer to PAR. 2 B.

C Guidance/Clarification. Provide guidance and clarifications.

7 AIP RESPONSIBILITIES

AIP responsibilities include (but are not limited to) the following:

A Administering the loss adjustment procedures. The AIP is responsible for all loss adjustment responsibilities outlined in this handbook whether the requirement is performed by a contracted adjuster, employed adjuster, or other AIP employee. The AIP and other parties involved with FCIC's Multiple Peril Crop Insurance program are to administer general loss adjustment in accordance with the procedures (requirements) provided in this handbook and in conjunction with the following issuances:

(1) FCIC-issued crop handbooks (including the Prevented Planting Handbook) and FCIC-issued Underwriting Guides (handbooks), any FCIC-issued handbook slipsheets that supersede any portion of this handbook or crop LASHs, and any Interpretation of Procedures (MGR.05-18);

(2) Appendix IV of the Standard Reinsurance Agreement for AIPs to meet the minimum guidelines, procedures and performance standards that FCIC expects to be used in training agents and adjusters; and quality assurance functions.

(3) FCIC-Appendix III handbook (formerly FCIC-M13 (Data Acceptance System Handbook) for data elements, data requirements, and edits;

(4) FCIC-24020 (Written Agreement Handbook (WAH)) for written agreement standards and any Interpretation of Procedures (MGR.05-18);

(5) FCIC-18010 (Crop Insurance Handbook (CIH)) for general underwriting standards and APH standards and guidelines, any FCIC-issued slipsheets to this handbook, and any Interpretation of Procedures (MGR.05-18);

(6) Any RMA bulletins, informational memorandums, or memorandums pertinent to loss adjustment; and

(7) Applicable policies, basic provisions, crop provisions and any applicable FADs, applicable actuarial documents (including the SPOIs), applicable options or endorsements, and applicable approved written agreements that are in effect for the crop policy being inspected.

B Compliance/Implementation

(1) Comply with and implement the loss adjustment standards (requirements) and loss-related form standards and form completion instructions (requirements) established by FCIC, through FCIC loss adjustment handbook standards and/or

the Document and Supplemental Standards Handbook issued by RMA's Product Administration and Standards Division, or as otherwise specified in writing by FCIC; and

(2) Comply with all other requirements issued by FCIC in the administration of contracts between the company and FCIC.

C Ensure that all documentation, determinations, and calculations are completed as specified in the FCIC-issued LAM, crop LASHs, and any other applicable FCIC issuances.

D Input. Provide input to FCIC regarding the loss adjustment standards.

E Advise. Advise RMA's Product Administration and Standards Division of impending situations, which may necessitate the development of procedures, form standards, or calculations that are different than those identified in the FCIC-issued standards.

F Documents/Procedures. Provide the adjuster with the insurance contract forms (or data from the processed forms) and procedures identified in PAR. 5.

G Determinations and/or Verifications. In addition to the responsibilities identified in this handbook, determine or verify whether crop-specific contract provisions or requirements (identified in the crop handbooks) apply to the insured, and if so, whether they have been complied with by the insured.

H Loss Adjustment Equipment. Assure that the adjuster has necessary equipment, is trained in its operation, and that such equipment is in proper working order to perform loss adjustment duties.

I Conflict of Interest. Assure that there is no adjuster conflict of interest involved, as follows:

(1) AIPs and their service providers shall not permit any person involved in the loss adjustment determination or verification required to complete a claim, or the determination or verification of a cause of loss, to adjust a loss for:

(a) An insured with whom they have a business, financial or legal relationship (Business, financial and legal interest include but are not limited to lending money, custom farming, leasing land or other property, selling other goods or services besides insurance, or activities of a similar nature);

(b) An insured or a person with a substantial beneficial interest in the insured, whose eligible crop insurance contract was sold by a relative of the person; or

(c) A relative of the person. Refer to Exhibit 1 for the definition of "relative."

(2) AIPs shall not permit their sales agents, agency employees, sales supervisors, or any relative of its sales agent, agency employee or sales supervisor, to be involved in loss adjustment activities in a county or adjoining county where the sales agent, agency employee or sales supervisor performs sales functions (except receipt and transfer to the AIP of a notice of loss).

(a) Loss adjustment activities are any activities outlined in this handbook, of which the persons listed in (2) are prohibited from doing, unless otherwise stated in this handbook. Loss adjustment activities would also include any revisions or additions to the contents of this handbook via Manager's Bulletins.

(b) Simplified Claims. Under a simplified claims process, sales agents may perform the administrative tasks described in PAR. 137 A (9), but cannot be involved in any other way.

(c) The agent may perform a facilitation role in the receipt and transfer of the notice of loss, and in advising and counseling policyholders of their rights, responsibilities, and duties under the policy. This facilitation role may occur at any time, including before, during, and after the period of time when the adjuster performs their exclusive duties to independently verify and validate loss information during the loss adjustment process. However, the SRA specifically prohibits sales agents, agency employees, sales supervisors, or any relative (Defined in the SRA) of its sales agent, agency employee or sales supervisor from being involved in loss adjustment activities in a county or adjoining county where sales function are performed.

1 The prohibited activities specifically cited in the SRA, Section F. 4. Conflict of Interests, are:

a *"The supervision, control, or adjustment of a claim;"*

This prohibition is specifically focused to allow adjusters to independently perform their verification and validation duties as set forth in Part I, PAR. 8, of this handbook in order to independently determine the loss. Agents are prohibited from being involved in the adjuster's determination of the loss, including the adjusters' (and AIP reviewers') sole responsibility and role for verification and validation of loss information with independent third parties. Verification and validation means the adjuster (and AIP reviewer) must actually contact the third party that provided the information, confirm the accuracy of the loss information, and document the measures used in verification. However, this prohibition is not intended to preempt at any time the duty and responsibility of the agent to provide guidance and advice to the policyholder on his/her policy options, duties, rights and responsibilities under the policy. AIPs solely supervise and control the loss adjustment process for a claim determination, and are directly responsible for all loss adjustment oversight.

b *"Obtaining sales or production records for the purposes of loss adjustment on behalf of the policyholder (other than simply collecting information directly from the policyholder and providing it to the AIP);" Activities* that an agent may perform under this section include the following:

i Receive a notice of loss from the policyholder and transfer it to the AIP;

ii Provide a copy of the AIP's official file folder, as applicable, to the adjuster;

iii In addition to the specific requirements in the SRA, provide the adjuster with any information provided from the policyholder related to the loss. If the policyholder gives certain information to the agent that normally is obtained by the adjuster (settlement sheets, weight slips, maps, etc.), the agent may provide such information to the adjuster. However, the adjuster is directly responsible for the verification and validation of the information from the third party source of such information, just the same as the adjuster is to do if the information was provided by the insured;

iv Facilitate the adjuster's gathering of information directly from other parties. For example, the agent may call the grain elevator to confirm the adjuster's identification and authority to collect needed information, or facilitate getting Aflatoxin test information from the producer to the adjuster; and

v Assist the adjuster to locate the policyholder or vice versa.

However, nothing in the facilitation of such interactions or information gathering permits activities that may allow the agent to influence the loss adjustment process or the adjuster and their independent determination of loss.

c *"A loss adjustment determination or verification required to complete a claim or the determination or verification of a cause of loss;"*

In general, an agent shall not influence or coerce the policyholder or the adjuster in the preparation or presentation of information associated with a claim; the determination or verification of facts or information associated with a claim, or the determination of the cause of loss or the amount of a claim, other than to facilitate the adjuster's gathering of information from the policyholder and third parties as set forth in "b" above. An agent may not conduct the following activities since they present opportunities for the agent to inappropriately exert influence:

i Ride with the adjuster to the field or be present with the adjuster during the loss inspection and related processes;

ii Accompany the adjuster or AIP reviewer in their independent verification and validation of claim information from third parties; and

iii Offer the use of or allow an adjuster to use the agent's or agency's office, computer, or other similar resources to prepare the claim and related documentation. However, the adjuster may use the administrative services such as copying and faxing services, and telephone use as

necessary to facilitate the loss inspection if such services are not available to the adjuster. (In the event of a significant or widespread disaster or emergency with extenuating circumstances, RMA may provide additional procedure for handling situations or issues not covered by this paragraph, or requiring alternative steps or processes.)

d *"Verification of yields for the purpose of validating insurance coverage or the guarantee;"*

The independent verification of prior and current yields in the determination of a loss on a claim is an activity reserved exclusively for the adjuster. This includes certain growing season inspections, underwriting reviews and other pre-acceptance inspections performed by the AIP for the purposes of determining insurability of the crop or the amount of crop to be insured. Therefore, an agent must not be present during such field inspections or otherwise interact with the adjuster, AIP reviewer (or similar AIP representative) during the field verification process of yields. To the extent the completed inspection documentation is in the policyholder file, the agent can and must provide this to the adjuster.

e *"After a notice of loss is filed by the policyholder, advising or assisting the policyholder in any manner regarding the preparation of the claim and the determination of the indemnity, including, but not limited to, whether the adjuster correctly applied loss adjustment procedures;"*

Nothing prohibits an agent from consulting with the policyholder to explain the crop insurance policy's terms and conditions, the insurance business cycle and processes, and the implications of decisions or actions that may be taken by the policyholder under the policy. Neither the SRA nor this Bulletin prohibits such consultation from occurring after a notice of loss is filed by the policyholder, as long as such consultation does not include any opinion, influence or coercion as to the facts of a claim on policies written by the agent or the determinations of the adjuster on that claim. Permitted advice may extend to the implications of a pending or active claim on a first crop/second crop decision by the policyholder, or the implications of other management decisions on insurability or benefits under the policy. Likewise, the agent may assist the policyholder in understanding the loss determination and his or her options for an appeal with the AIP. If the agent suspects that a claim has been adjusted improperly or contains a factual error, the agent may contact the AIP's field supervisor or claims manager for review and assistance, but must not discuss the matter directly with the adjuster to avoid the potential for or appearance of inappropriately influencing the loss adjustment process. (AIPs are encouraged to develop a process for policyholder questions and service after the adjuster completes the adjustment process. Generally, this should include a process for seeking clarification or questions to a

second level person in the loss adjustment chain such as a loss supervisor or AIP claims manager, or similar representative.)

f *"Any other function reserved for adjusters in the procedures."*

AIPs must ensure that loss adjustment personnel provide policyholders with complete information on controversial claims and dispute resolution in the event of a disagreement. AIPs shall ensure adjusters perform their exclusive duties without inappropriate influence from agents or other similar parties per the terms of the SRA and FCIC-issued procedures. Agents shall not perform activities that allow them to influence the loss adjustment process or the adjuster and their determination of loss.

For any activity related to the insured during the adjustment of the loss not included in this section, the adjuster should contact the AIP to determine whether such activity would constitute a conflict of interest.

2 Prohibited agent contact does not include:

a Social interactions;

b Checking or calling as to the status of a claim, claim payment or facilitating any follow up for appointments or other necessary meetings between the producer and adjuster;

c Normal course of business contact on other policies, policy provisions and crop insurance matters not related to a specific open claim (a claim pending insured and adjuster signatures); and

d Interaction on a claim after the adjuster has filed the appropriate claim documentation with the AIP (the agent shall not engage the adjuster directly on a claim dispute).

(3) Powers of Attorney.

Powers of Attorney are permitted between employees or sales agents and policyholders. However, a sales agent with a power of attorney shall not perform those tasks in the loss adjustment process on behalf of a policyholder that would place the sales agent or employee in a similarly situated position as those prohibited in (2) (c) above. The agent may coordinate with the tenant, or other appropriate person, for the tenant to provide the necessary information to complete the loss inspection. However, in the event the policyholder is not available to sign the claim or related loss documents, the policyholder may execute a separate power of attorney with the tenant or such other appropriate person to sign the claim documents.

(4) AIPs notification to employees, affiliates, agents, and adjusters of their duty to disclose any conflict of interest they might have. In accordance with the SRA, the AIP must notify all of its employees and affiliates, including agents, and adjusters, in writing of their duty to disclose to the AIP and in turn FCIC any business,

financial, legal (including relative), or familial relationship with an insured, or a person with a substantial interest in the insured.

J Review Summary of Coverage (Summary). Prior to the loss adjustment inspection, the AIP should: (1) Review the Summary against the data on the acreage report; (2) reprocess the acreage report if keying errors are found prior to assigning the loss to be worked; and (3) notify the insured that a new summary will be issued with the correct data.

K Required Information. Ensure that the required information (i.e., entry instructions) specified in FCIC-issued loss adjustment standards (LAM, crop handbooks, or any other applicable procedures) is recorded on the specific forms, printouts, or on a Special Report attached to the appropriate form.

8 LOSS ADJUSTMENT RESPONSIBILITIES

A General Information.

(1) The following responsibilities and procedures throughout this handbook apply to whoever is performing loss adjustment whether it is an AIP employee whose primary duty and title is not adjuster or a person under contract or employed with an AIP specifically as an adjuster. For example, some AIPs may have employees whose primary function is NOT loss adjustment activities (e.g., underwriter) but this employee makes some loss adjustment verifications prior to assignment or after assignment of the loss notice to the adjuster. Additionally, some AIPs may have non-loss adjuster employees perform certain types of reviews or loss adjustment assignments found in this handbook.

(2) Sales Agents, local agency employees, or sales representatives (other than taking notices of damage or loss or as otherwise specified in this handbook) cannot perform loss adjustment duties unless outside of their selling and servicing area as described in PAR. 7 I.

B Loss Adjustment Responsibilities. Responsibilities include **(but are not limited to)** the following:

(1) Be thoroughly familiar with the insured's contract folder or print-out supplied by the AIP showing the insured's coverage that is in effect, and all insurance documents (or data from documents) that pertain to the insured's insurance contract in the county; e.g., Basic Provisions, applicable crop provisions, any applicable endorsement or option provisions in effect for the crop year, Written Agreement information (if applicable), SPOI provisions, reported Acreage Report information, etc. Verify and/or determine and document the information as specified in this handbook or other FCIC-issued procedures necessary for loss adjustment. Document information as specified in this handbook or other forms of issuance approved by RMA's PM or PASD, or RMA Manager's Bulletins.

(2) Use loss forms that meet FCIC-form standards and procedures as outlined in Part 1, PAR.s 2 B and C. All FCIC-issued procedures take effect on their approval date. For loss adjustment handbooks, the approval date is always found at the top of the SC 1 page. The FCIC-issued procedures are effective as of the approval date. All FCIC-Loss Adjustment Standards Handbooks for the applicable crop year are found on RMA's website (or its successor) at http://www.rma.usda.gov/data/directives.html#25000

DO NOT deviate from FCIC-issued procedures without prior written approval from FCIC. (The AIP will provide the appropriate parties with any FCIC-approved deviations.)

(3) Use and be proficient with the applicable loss adjustment equipment.

(4) Identify the type of inspection that will be made. All inspections will fall into one of three types: (1) Indemnity Inspection (including prevented planting payment Inspection), (2) Replant Payment Inspections, and (3) Special Contract Services Inspections.

(5) Visit farms for the purpose of inspecting damaged or destroyed crops during the growing season or following harvest.

(6) Explain to insureds their contractual responsibilities, filing procedures, and what will be done during the inspection.

(7) During farm visit:

(a) Determine and/or verify any insured and uninsured causes of loss. Establish production or dollar amount to count from appraisals for uninsured causes of loss.

(b) Determine and/or verify the time of loss.

(c) Review and verify the acreage report information as described in PAR. 21.

(d) Inspect insured crops and make inquiries to independently establish all harvested, unharvested, and potential production for all units of the crop being inspected in accordance with PART 3 Section 4. Determine (measure, if applicable) all farm-stored production from the loss units of the crop being inspected in accordance with PART 3.

(e) Determine (measure if applicable) the insurable acreage of the loss unit or as required in any other type of inspection.

(f) Determine if there is any unreported insurable acreage. If any is found, take appropriate steps, as found in this handbook.

(g) Inspect acreage to determine and verify correct FSNs, legal descriptions, classifications, planting dates, planting practices, and whether proper planting and care of the crop was carried out as it pertains to fertilizer, herbicides, irrigation (when applicable), etc.

(h) Appraise potential production and grant written consent to replant or put insured acreage to another use when the insured is not going to carry the crop to harvest as described in PAR's 85 and 88.

(i) Perform APH review responsibilities as defined in PAR. 19.

(j) Perform on-the-farm inspections in accordance with procedures in this handbook and applicable crop LASHs.

(8) Review information from any previous inspection for the crop being inspected, including information documented on Special Reports (definition in Exhibit 1).

(9) Verify the insured's entity and share are correct. Verify whether the entity is married and, if so, whether the spouse's SSN/EIN has been provided to the AIP as stated in PAR.'s 13 H and 14 A and D.

(10) During a loss inspection, review documents, records, etc., that would show the correct entity, share, legal description and/or FSA FSNs, and acres. Refer to the appropriate paragraphs for more information. As stated in PAR. 58, FSA records do not have to be used for verification purposes, UNLESS information needed to complete loss adjustment can only be obtained from FSA. However, such verification at FSA is recommended as an additional verification source since AIPs must ensure that producer-certified information is accurate and that liability is established and indemnities are paid according to FCIC-issued policies and procedures and any related Agency policy or procedural interpretations.

(11) If the actuarial classification appears to be incorrect, adverse, or unusual risk conditions exist, prepare a Special Report with details and forward to the AIP. The AIP can then request an actuarial review or prepare a Request for Actuarial Change.

(12) During an indemnity inspection, explain what the insured's options are under the terms and conditions of the contract, but in no way provide advice or suggestions that could affect the insured's decision concerning these options; e.g., do not advise or suggest whether to carry the crop to harvest or go to another crop, etc.

(13) DO NOT provide any advice or suggestions to the insured regarding the insured's farming operation; e.g., type and application of chemicals, herbicides, tillage, etc. If the insured solicits your advice, advise the insured to consult with an agricultural expert (refer to definition in Exhibit 1).

(14) Advise insureds that a routine quality assurance review may be made to assure the loss adjustment was done in a fair and impartial manner, and in accordance with contract terms.

(15) **Prior** to obtaining the **insured's signature** (or authorized representative's signature) on the claim form: (1) Review all entries on appraisal worksheets and claim forms with the insured; (2) Explain any circumstances that may affect the indemnity; and (3) Explain the Certification Statement on the claim form and that the insured's (or authorized representative's) signature represents the insured's certification that the information on the claim form is complete and accurate. **Do not sign a final replant payment or final claim for indemnity (including prevented planting payment) until satisfied with all determinations.**

(16) Use a Claim Checklist (similar or like the one shown in Exhibit 10) when instructed by the AIP to do so.

(17) Conflict of Interest

Refer to PAR. 7 I regarding what constitutes a conflict of interest for a loss adjuster and the loss adjuster's responsibility to disclose to the AIP and FCIC any potential conflicts of interest the adjuster may have.

(18) Do not discriminate against any insured because of race, color, religion, sex, age, disability, marital status, national origin, or sexual orientation.

(19) Do not solicit or accept money, gifts, or favors from any party that are designed to influence (or give the appearance of influencing) any loss adjustment finding or decision.

(20) Do not use your position to gain favor, influence, or financial advantage over any insured or individual.

(21) Adjusters must provide written consent (not verbal consent, unless specified otherwise in these procedures) to the insured when the adjuster is releasing acreage to:

(a) destroy the insured acreage;

(b) put the insured acreage to another use;

(c) replant the insured acreage (only for crops having replant provisions); and

(d) abandon the insured acreage.

(22) Before a replanting, prevented planting, or indemnity claim is finalized, verify the insurability requirements of the crop and acreage; e.g., one of the insurability requirements of acreage is that the acreage upon which the insured crop is planted has had a crop planted and harvested or insured in one of the three previous crop years, unless it meets the exceptions, as stated in PAR. 44. Also, refer to PAR. 44 for additional reasons that acreage would not be insurable. Insurability requirements for a crop can be found in PAR. 45, the crop provisions, if applicable, or SPOIs.

(23) When there is contained water, verify and document the elevation of the contained water at the time of loss. Refer to PAR. 78 A (6) (c) for details.

(24) Loss Adjustment Form corrections.

DO NOT USE WHITE OUT ON ANY DOCUMENT.

(a) If during the time of loss adjustment the adjuster makes a correction on a loss adjustment form, the adjuster will follow the instructions for making corrections in the Section entitled Claim Form Entries and Completion procedures in the applicable crop LASH.

(b) If a claims reviewer or auditor makes a correction on the claim for indemnity form prior to processing it for payment:

1 the auditor/reviewer will:

a Line through the incorrect information and replace with the correct information,

b Initial and date the correction/change, and

c Document on an attached Special Report the reason why the correction/change was needed.

(c) The AIP should notify the insured of this correction/change if this change/correction will result in reducing the Indemnity Payment (Replant Payment or PP Payment, if applicable) from what it would have been had the correction/change not been made.

9 INSURED'S RESPONSIBILITIES

Besides the requirement to provide notice when damage occurs (as stated in PAR. 25), the policy requires the insured to:

A Protect the crop from further damage by providing sufficient care

B Cooperate with the AIP in the investigation or settlement of a claim, and as often as the AIP reasonably requires:

(1) Show the AIP the damaged crop;

(2) Allow the AIP to remove samples of the insured crop; and

(3) Provide records and documents requested and permit the AIP to make copies; AND

C Obtain consent from the AIP before, and notify the AIP after:

(1) Destroying any of the insured crop that will not be harvested,

(2) Putting the insured crop to an alternative use,

(3) Putting the acreage to another use, or

(4) Abandoning any portion of the insured crop.

NOTES

PART 2 INSPECTION DUTIES

SECTION 1 PRODUCER ELIGIBILITY AND ENTITIES

10 GENERAL INFORMATION

Before any loss adjustment or contract service can be initiated, verify that the insured and all who have an interest of 10 percent or more are eligible for insurance and the entity is legal.

11 INSURANCE PROVISIONS

A Eligibility

Insurance will cover a PERSON'S share of an insurable crop as landlord, owner-operator, or tenant.

The definition of “person” is an individual, partnership, association, corporation, estate, trust, or other legal entity, and wherever applicable, a State, or a political subdivision or agency of a State. “Person” does not include the United States Government or any agency thereof. Refer to Exhibit 1 for definition of “Insured.”

B Other MPCI Insurance (Duplicate Coverage)

(1) Only one MPCI policy (issued under the authority of the Federal Crop Insurance Act) is permitted on the same crop/county for the same person/entity EXCEPT:

(a) High-Risk Land, as designated by FCIC that is excluded from an additional coverage policy and is insured under a separate CAT policy may be insured on a separate CAT policy provided that on or before the crop’s sales closing date the insured:

1 Executes a High-Risk Land Exclusion Option Form, and

2 Obtains a CAT policy from the **same** AIP.

If it is discovered that duplicate policies exist the first effective crop year (i.e., CAT policy written with Company A and an additional coverage policy is written with Company B), the CAT policy written with Company A may be canceled and rewritten with Company B for the purpose of insuring the high-risk land with the consent of the AIPs involved. The following crop year the CAT policy and the additional coverage policy must be written with the same AIP.

(b) Hybrid Seed Corn or Hybrid Sorghum Seed grown under contract with more than one seed company.

1 A separate MPCI policy is allowed for acreage grown under contract with each different seed company.

2 Different coverage levels may be selected on each separate policy. Payment of losses must be made accordingly and coordinated between policies and AIPs. Unit division is as stated in PAR. 55.

(c) Crops also insured under AGR/AGR-Lite policies.

(2) If it is discovered or suspected that duplicate policies exist, notify the next level of supervision. Duplicate policies will be handled in accordance with the procedures in the CIH.

C Crop Provisions With More Than One Insurable Crop

*** The Arizona and California Citrus, Florida Citrus, Texas Citrus Fruit, Texas Citrus Trees, Coarse Grains, Grapes (California ONLY), Small Grains, Stonefruit, and Tobacco Crop Provisions include more than one crop; however, the crop provisions allow insureds to designate which of the crops are to be insured. A separate policy is written for each crop selected from the single crop provisions; however, this is not considered to be duplicate coverage. The section entitled "Insured Crop" in the applicable crop provisions or the SPOIs indicates the separate insurable crops; e.g., Fresh Apricots and Processing Apricots are separate insured crops. Also, Exhibit 2 of this handbook lists all of the insurable crop names and codes.

D Other Insurance/Excess Coverage

When other:

(1) Fire insurance is carried on the insured crop, the MPCI policy provides for only excess coverage. Refer to PAR. 125 for more detailed information.

(2) Insurance is provided by an AGR/AGR-Lite policy, the individual crop policy(ies) provides primary coverage and indemnity payments from those policies. Such payments are considered income to count under the AGR/AGR-Lite policy.

E Multiple Benefits From More Than One USDA Program.

(1) If an insured is eligible for an indemnity and is eligible for the same loss under another USDA program, the insured may receive benefits under both programs, unless it is specifically limited by the crop insurance contract or by law.

(2) The total amount received from all such sources may not exceed the amount of the insured's actual loss. The total amount of the actual loss is the difference between the fair market value of the insured commodity before and after the loss, based on the insured's production records and the highest price election or amount of insurance available for the crop.

(3) FSA will determine and pay the additional amount due the insured for any applicable USDA program after first considering the amount of any crop insurance indemnity.

12 INSURANCE QUALIFICATIONS

A Person Who Can Be Insured

Only a person [1/] that has a *bona fide* interest in a crop at the time coverage begins, and that is not classified as ineligible can be insured. "*Bona fide* interest" means having a share of the crop (receives all or part of a crop) as an owner-operator, landlord, tenant, or sharecropper.

(1) Landlord

Landlord is the owner of land upon which the crop is grown and who receives a share of the crop.

[1/]: "Person" is an individual partnership, association, corporation, estate, trust or other legal entity and whenever applicable, a State or a political subdivision or agency of a State. "Person" does not include the United States Government or any agency thereof. For specific information regarding entities, refer to PAR. 14.

(2) Owner-operator, tenant, or sharecropper is a person who:

(a) Produces the crop.

(b) Exercises managerial control relating to producing and marketing the crop (controls what to plant, when to plant, when to till, cultivate, irrigate, fertilize, spray, harvest, market, etc.).

(c) Makes credit arrangements.

(d) Owns farming equipment, makes arrangements to obtain equipment, or hires custom work.

B Ineligible Person

An ineligible person is a person denied participation in any program administered by FCIC under the Act.

(1) Ineligibility occurs when a person [1/]:

(a) Has a delinquent debt to FCIC or an AIP;

(b) Is disqualified, suspended, or debarred, under the ACT and applicable regulations; or

[1/]: "Person" is an individual partnership, association, corporation, estate, trust or other legal entity and whenever applicable, a State or a political subdivision or agency of a State. "Person" does not include the United States Government or any agency thereof. For specific information regarding entities, refer to PAR. 14.

(c) Is in violation of the controlled substance regulations as described in PAR. 56.

(2) Any person who is ineligible because of a delinquent debt is not eligible for crop insurance until the debt is resolved or the period of disqualification has elapsed,

and if this occurs after the SCD for the crop, eligibility cannot be regained until the next crop year. However, if there are multiple SCDs for the crop and the producer is ineligible at the first SCD for the crop because of a delinquent debt, the producer may subsequently become eligible by paying the debt and may then timely apply for coverage by a later SCD on the same crop for the remainder of the crop year.

(3) Any person who is disqualified, suspended, or debarred, under the Act and applicable regulations is ineligible for crop insurance for the period of disqualification, suspension, or debarment. Any person who is disqualified for violating the controlled substance regulations is ineligible for crop insurance for the length of time stated in PAR. 56.

13 VERIFYING AND/OR DETERMINING INSURABLE SHARE

A Insurable Share

(1) An insurable share is the percentage of interest in the insured crop the owner, operator, or tenant has at the time insurance attaches. Unless the accepted application clearly indicates insurance is requested for a partnership or joint venture, or is intended to cover the landlord's or tenant's share of the crop, insurance will cover only the share of the crop owned by the person (entity) who completed the application. The share will not extend to any other person having an interest in the crop except as may be specifically allowed in the policy or CAT Endorsement. The interest of spouses, children, or other household members in most cases will be insured under one entity and have only one policy number issued. Refer to PAR. 14 for exceptions that allow spouses and children to have separate policies.

(2) If a person (entity) is sharing with a landlord or tenant (or multiple landlords or tenants) only one person's (entity's) share is allowed to be insured on each application, unless the landlord or tenant has requested to insure the other's share of the crop on their application. In this case, evidence of the other party's approval (lease, power of attorney, etc.) must be provided to the AIP by the SCD and retained. However, a landlord/tenant's share cannot be insured under another person's policy if the landlord/tenant has a policy for that crop/county. For example, a landlord's share cannot be insured under a tenant's policy if the landlord has his own individual policy for that crop/county. When the landlord or tenant insures the other's share:

(a) The percentage shares of both persons must be shown in the remarks section of the acreage report or on a Special Report attached to the acreage report.

(b) Only one policy is allowed when the person is sharing with multiple landlords/tenants. Each separate share arrangement with different landlords or tenants, qualifies as a basic unit; i.e., this arrangement does not negate the basic unit provisions in the policy that indicates there is a separate basic unit for the acreage shared with each different landlord or tenant. AIPs will provide this information to the adjuster if the adjuster is not provided a copy of the actual acreage report. Refer to PAR. 55 for information about how share arrangements affect unit structure.

(3) The insured establishes his/her insurable share on the acreage report by reporting the share insurable at the time insurance attached. **However, only for the purpose of determining the amount of indemnity:** If, during the final loss adjustment inspection, it is determined that the insured's share differs from what it was at the time insurance attached, the insured's share will be the lesser of what:

(a) it was at the time insurance attached, or

(b) the AIP determines to be the share at the earlier of:

1 the time of loss, or

2 the beginning of harvest of the unit, unless excepted by the specific crop policy.

At the time of final loss adjustment, if the insured's share is determined to be less than originally reported, decrease the share by entering the determined share in the appropriate column for the insured's share on the claim. This may also require a revised acreage report depending on the AIPs processing system. Follow instructions as provided by the AIP.

B Share Arrangements (Written or Verbal)

(1) **100 percent crop share (Cash Lease)**

(a) 100 percent crop shares include 100 percent share as owner/operator and/or land that is rented for cash, a fixed commodity payment, or any consideration other than a share in the crop.

(b) A lease that provides for EITHER a minimum payment (such as a specified amount of cash, bushels, pounds, etc.) OR a crop share is considered a cash lease (e.g., lease provides for a 50/50 crop share or $100 dollars, whichever is greater).

(c) A lease that contains a crop share but the percentage is not a fixed amount at the time coverage begins is considered a cash lease. Such leases may contain a cash consideration with an undetermined crop share percentage at the time coverage begins.

(2) **Crop Share (Crop Share Lease)**

(a) In order to have a crop share, the crop share percentage must be specified at the time coverage begins and cannot change based on the amount of production harvested. Refer to example 4 and 8.

(b) Written or verbal lease agreements containing provisions for BOTH a minimum payment (such as a specified amount of cash, bushels, pounds, etc.) AND a crop share is considered a crop share lease.

C Share Arrangement Examples

Situation 1: The tenant (insured) agrees to give the landlord 1/3 of the crop in return for farming the land.

- The agreement is a crop share.
- The insured's share is 2/3 of the crop.

Situation 2: The tenant (insured) agrees to give the landlord 1/3 of all the crops produced on the premises and to guarantee that the landlord's share of the crops will average $35 an acre. In the event that the landlord's share of the crops is worth less than $35 an acre, the tenant will pay the difference in cash to the landlord.

- The agreement is a crop share.
- The insured's share is 2/3 of the crop.
-

Situation 3: The tenant (insured) agrees to give the landlord $50 per acre cash and 1/4 of the crop in return for farming the land.

- The agreement is a crop share.
- The insured's share is 3/4 of the crop. We do not convert the $50 per acre cash payment to a share basis.
-

Situation 4: The tenant (insured) agrees to give the landlord $50 per acre cash and 1/3 of all the bushels in excess of 60 bushels per acre. (Average yields for the area are usually around 55-65 bushels.)

- The agreement is a cash lease.
- The insured's share is 100 percent. The bushels in excess of the 60 bushels per acre is a "bonus" above and beyond the insured crop. The share percentage of the entire crop cannot be determined at the time coverage begins since it is dependent on how many bushels in excess of 60 bushels will be produced.

Situation 5: The tenant (insured) agrees to give the landlord $50 per acre cash and 10 bushels per acre.

- The agreement is a cash lease.
- The insured's share is 100 percent. We do not convert the 10 bushels to a percentage share. In this scenario the tenant will pay the landlord a fixed amount, cash ($50) and commodity (10 bushels per acre).

Situation 6: The tenant (insured) agrees to give the landlord 25¢ for every bushel of peaches harvested.

- The agreement is a cash lease.
- The insured's share is 100 percent. Because there is no agreement for a set share percentage of the crop at the time coverage begins, the insured's share must be considered a cash lease.

Situation 7: The tenant (insured) agrees to pay the landlord $25 per acre OR 1/4 of the crop, whichever is greater.

- The agreement is a cash lease.
- The insured's share is 100 percent. Since the lease contains an either/or type arrangement, the share cannot be considered a fixed element of the lease.

Situation 8: The tenant's (insured's) lease agreement states that the tenant will receive the first 85 bushels per acre of corn produced. Of any bushels in excess of 85 bushels per acre, the tenant will receive 60 percent and the landlord will receive 40 percent. The insured's guarantee is 85 bushels and is based on the highest level of coverage that can be elected.

- The agreement is a cash lease.
- The insured's share is 100 percent. Since the insured receives the first 85 bushels and this amount is the insured's guarantee, 85 bushels is the maximum amount that could be insured under the policy.

Situation 9: **Flexible Share Arrangement.** The tenant's (insured's) APH is 17.0 tons per acre. The tenant's lease agreement contains the following schedule:

Tons produced	Tenant's share	Landowner's share
0-8 tons	98%	2%
8.1 - 12.0	96%	4%
12.1 - 16.0	94%	6%
16.1 - 20.0	90%	10%
20.1 - 25.0	88%	12%
25.1 - ...	85%	15%

The agreement is a share arrangement since there is no mention of cash.

- The base share is derived from the tenant's (insured's) APH). Therefore, the share percentage range for the insured's (tenant's) APH reported on the acreage report would be 90%. Since the share is to be established at the time insurance attaches and both still have a share in the crop at the end of the crop year, the share

percentage established at the time insurance attached will be retained for indemnity and premium purposes.

D Verify the Following:

(1) Producer has a bona fide interest in the crop. (Refer to PAR. 12).

(2) Entity type processed from the application reflects the correct entity (individual, partnership, corporation, co-owner, joint operator, estate, trust, etc.). (Refer to PAR. 14.)

(3) Producer qualifies as landlord, owner-operator, or tenant. (Refer to PAR. 14.)

E Crop Share Verification

Verify the insured's correct share, by crop, by comparing the reported share on the crop insurance acreage report to the insured's share shown on:

(1) Lease agreements, elevator summaries, packer statements, etc.; or

(2) FSA-578 (Do not use other FSA documents to verify crop share since these documents may contain “contract” shares rather than crop share.) When crop shares are reported to the FSA, AIPs do not have to verify crop shares reported for crop insurance with the crop shares reported to the FSA, but are encouraged to do so since AIPs must ensure that producer-certified information is accurate so liability is established and indemnities are paid in accordance with the policy provisions; or

(3) If needed, land deeds, or other similar evidence to determine the correct share.

F Documentation

Document from what sources the share verification was made, and document anything else pertinent to the share verification.

G Resolving Share Discrepancies. (Refer to exceptions for spousal shares as outlined in subparagraph H below.)

(1) If the shares on the crop insurance acreage report, by crop, do not agree with the shares on marketing records, lease or share agreements, FSA-578 (does not have to be used for verification purposes (refer to (3) below)), or other documents or actions of the insured that reflect crop share, resolve these discrepancies as follows:

(a) If there is a written lease/share agreement in force, use the share identified on the agreement, unless the marketing records or FSA-578 (does not have to be used for verification purposes, (refer to (3) below)) or actions of the insured do not substantiate the share identified in the agreement; whereas, handle as stated in (1) (c) below. Refer to (2) and (3) below.

(b) If no written lease/share agreement is in force but crop shares are reported on the FSA-578, use the share identified on the FSA-578 if it is used for verification purposes (refer to (3) below)); unless marketing records or actions of the insured do not substantiate the insured's share identified on

the FSA-578, whereas, handle as stated in (1) (c) below. Refer to (2) and (3) below.

(c) If no written lease/share agreement is in force or the share shown on a written lease/share agreement or FSA-578 (does not have to be used for verification purposes, (refer to (3) below) is not substantiated with marketing records and/or actions of the insured, determine the share from the marketing records and/or actions of the insured. Refer to (2) and (3) below.

(2) Marketing records may include settlement sheets, canceled checks, seed receipts, fertilizer receipts, chemical receipts, etc. Actions refer to other arrangements the insured may have made with the other party sharing in the crop; e.g., every third load is delivered to the other party sharing in the crop, etc. If there is evidence to support that the lease/share agreement is a scheme to acquire more USDA benefits, the AIP may, by policy provisions, void the contract.

(3) AIPs are not required to verify crop shares reported to FSA, but are encouraged to do so since AIPs must ensure that producer-certified information is accurate and that liability is established and indemnities are paid according to policy provisions.

(4) Document your findings. The AIP will maintain documentation and copies of any applicable agreements and marketing records that substantiate the insured's correct share.

H <u>Spousal Shares</u>

(1) Generally, it is found that spouses share in the SAME farming OPERATION(S). This is why you will find that in PAR. 14 under the definition "Individual Entity: Spouses," married couples are considered to be an individual entity, thus allowing only ONE insurance contract with only one share shown for both on the crop insurance acreage report, even when:

(a) FSA recognizes a married couple who shares in the SAME farming operation as "two persons" for the purpose of farm program payment limitations and requires only ONE contract to participate in FSA programs to be signed by the married couple.

(b) Such married couples are considered to be a spousal entity/married individual for crop insurance purposes. Refer to PAR. 14 E (2).

(2) The only exception to a married couple being allowed to have only one contract is when the spouses are legally separated or separate under State law or when all the criteria in PAR. 14 E (2) (c) are met.

(3) Verifying the share

There is only one share for the spouses shown on the crop insurance acreage report, unless (2) applies. However, the FSA-578 may list two, as explained in (a) below. If it is found that there are two crop insurance contracts, it must be verified that the spouses qualify for separate entities as stated in (2) above and 14 E (2) below.

When AIPs verify crop insurance acreage reports with the FSA-578's, it is normally, as indicated in subparagraph G above, considered a discrepancy if the crop shares reported for crop insurance and the shares reported on the FSA-578 do not match. The same is true for names and entities. However, in some cases because of the "two person" recognition, the producer's name, entity type (e.g., partnership vs. individual), and/or share listed on the crop insurance acreage report and FSA-578 program can be in disagreement. Handle the verification of the spousal arrangements, as follows:

(a) When it is verified that it is a married couple and (2) above does not apply:

1 The share reported for crop insurance purposes will be considered correct if the total of the two shares listed for the spouses on the FSA-578 equals the same percentage as reported for crop insurance purposes. However, if it is determined the insured failed to provide the spouse's SSN, refer to PAR. 14 D to determine how this will affect the insured's coverage. Document the facts in the narrative of the claim or on a Special Report.

EXAMPLE: Fred Jones is the only name listed on the wheat insurance application. Fred reported a 100% share in Farm Serial Number (FSN) 2020 to FCIC, but the FSA-578 shows that Fred Jones has a 60% share in FSN 2020, and an FSA-578 shows that Mary Jones has a 40% share in FSN 2020. The total of the two shares reported on the FSA-578 equals the same percentage reported for crop insurance purposes. Therefore, there would be no discrepancy in shares reported for crop insurance purposes and those reported to the FSA for other than crop insurance purposes.

2 It will be considered a share discrepancy when the total percentage of the two shares reported on the FSA-578 for non-crop insurance purposes does not equal the same percentage reported for crop insurance programs. Resolve the share discrepancy in accordance with PAR. 13 G.

(b) When the FSA has recognized the spouses as being separate entities (operations), and the AIP has verified that spouses are legally separated or separate under State law and has recognized them as separate entities by giving each spouse a separate contract, the share reported on each spouse's crop insurance acreage report will be compared against the crop share reported to the FSA for the individual spouse. (Each operation will have separate FSNs.) If the individual spouse's crop share amount does not agree with what has been reported to the FSA for non-crop insurance purposes, handle in accordance with PAR. 13 G above.

I Questionable Insurable Interest in the Crop

When it is questionable whether the insured has an insurable interest in the crop, document the circumstances on a Special Report. Forward the Special Report to the next level of supervision, and include the insured's contract folder if it has been assigned to you.

14 ENTITIES

A Verify

(1) From information obtained from the insured, FSA or other reliable sources, and from the criteria for each entity type found below; verify that the person qualifies for the entity shown on the application or qualifies for a separate entity from another household member, relative, corporation, etc., and that the entity on the application has a *bona fide* interest in the crop. Incorrect entities may result in an invalid policy (e.g., separate policies written for a minor and a parent but the minor does not qualify as a separate entity from the parent).

(2) Verify whether the insured is married and, if so, whether the insured has provided the spouse's SSN/EIN to the AIP. Refer to 14 D and E (2) below for requirements of the spouses SSN/EIN. AIPs do not have to verify entities through the FSA; however, are encouraged to do so since AIPs must ensure that producer-certified information is accurate and that liability is established and indemnities are paid according to policy provisions.

(3) Applications must contain the applicant's SSN if the applicant is an individual, or EIN if the applicant is a person other than an individual. The application must also contain Substantial Beneficial Interest (SBI) information, if applicable, as stated in subparagraph D below. Correction of the insured's identification number may be made after the SCD but made on or before the ARD and requires the insured's signature except as stated in (a) below.

(a) Exceptions to Deadline for Correction of Insured's ID Number

1 AIPs may correct misreported identification numbers after the ARD if the person with the incorrect identification number is eligible to participate in programs administered under the Act, is not identified as ineligible in the Ineligible Tracking System (ITS), and has not had a reasonable opportunity to verify correct numbers due to identification number masking or other security measures implemented by the AIP to deter against the potential for identity theft. AIPs must implement measures to provide insureds with a reasonable opportunity to verify the primary and SBI holder(s) identification number(s) and must verify identification numbers prior to payment of a claim.

2 AIPs may correct errors on identification numbers after the ARD, if the incorrect identification number is the result of an AIP error (e.g., a processing or keying error) and the person with the corrected ID number is otherwise eligible.

(b) If neither of the exceptions in (a) above apply and the policyholder did not correct his/her identification number by the ARD, the policy is void.

(4) Entity Changes after SCD

(a) If the entity dissolves after the SCD, the policy will terminate as of the date of change if the event occurs before insurance attaches for any crop year. If the event occurs after insurance attaches for any crop year, the policy will continue in force through the crop year and terminate at the EOIP. Any

indemnity will be paid to the person(s) determined to be beneficially entitled to the indemnity. Also, refer to PAR. 132, "Documenting Death or Incompetency of an Insured" if this is one of the reasons for the dissolution of the entity.

(b) Changes to an entity status that occur after the SCD become applicable the following crop year, except as allowed in E (2) below. The changes, including any change in SBI holders, must be reported by the next SCD applicable under the policy. For example, if an individual marries after the SCD, this change must be reported the following year for that crop prior to or on the SCD to avoid penalty.

(5) If the entity type or ID number reported is questionable or incorrect, document the facts and refer the case to the next line of supervision or to whom the AIP has instructed. If an entity and/or ID number is verified at FSA and there is a discrepancy between the entity and/or ID number recorded for crop insurance and the local FSA office, AIPs will try to resolve the discrepancy with the FSA. If the discrepancy cannot be resolved and the AIP has evidence supporting its position, the AIP should retain the entity type reported to them; and keep on file all documentation and evidence supporting this decision.

(6) If it is determined the entity shown on the application has no insurable share in the crop, the policy must be voided; e.g., the insured's application shows "individual" but all FSA documents, marketing records, etc., show the entity that has the *bona fide* share in the crop is a Corporation. Even if the individual is one of the members of the Corporation, the insured as an "individual entity" does not have the *bona fide* share in this crop policy. However, there may be situations where corrections to entity names/types are allowed as outlined in subparagraph F.

B Unsupportable documentation. The **insured or the agent's certification and/or statement are not adequate documentation** (evidence) to support questionable entities or discrepancies between the entities reported to FSA and the AIP.

C Signature/Documentation

Exhibit 5 lists the person authorized to sign documents (including loss documents) for each entity type and documentation required for each entity type.

D SBI Information

(1) A SBI is defined as an interest held by any person of at least 10 percent in the applicant or insured. All persons with a SBI in a person must be listed and the SSN or EIN of each SBI provided. The spouse of any individual applicant or individual insured will be considered to have a SBI in the applicant/insured unless they can prove they are legally separated or otherwise legally separate under State law. Any child of an individual applicant/individual insured will not be considered to have a SBI in the applicant/insured, unless the child has a separate legal interest. For example:

(a) **EXAMPLE 1:** There are two partnerships that each have a 50 percent interest in the policyholder. Each partnership is made up of two individuals, each with a 50 percent share in each applicable partnership. Each individual would be considered to have a 25 percent interest in the

policyholder/applicant, and both the partnerships and the individuals would have a SBI in the policyholder/applicant. The spouses of the individuals would not be considered to have a SBI unless the spouse was one of the individuals that made up the partnership.

(b) **EXAMPLE 2**: If instead, each partnership is made up of six individuals with equal interest, then each would only have an 8.33 percent interest in the policyholder and would not be considered a SBI of the applicant/insured although the partnership would have a SBI in the applicant/insured.

(2) SBI information must be provided by the applicable SCD for new applicants and for carryover insureds. SBI information collected must be provided to an assuming AIP for any policy that is transferred.

(3) For both new applications and carryover policies, the following requirements apply:

(a) If the SSN, EIN, or Identification number is incorrect, corrections must be provided by the ARD. Errors (e.g., a processing or keying error) made by the AIP or misreported identification numbers may be corrected after the ARD if the person with the incorrect ID number is eligible to participate in programs administered under the Act, is not identified as ineligible in the ITS and has not had a reasonable opportunity to verify correct numbers due to identification number masking or other security measures implemented by the AIP to deter against the potential for identity theft. AIPs must implement measures to provide insureds a reasonable opportunity to verify the primary and SBI holder(s) ID number(s) and must verify ID numbers prior to payment of claim. Penalties may apply.

(b) If an eligible person with a SBI is not reported, the policy is reduced by the SBI's interest in the insured.

(c) If an ineligible person with a SBI is not reported, the policy is void, not just reduced. No indemnity, prevented planting payment, or replanting payment will be owed for any crop. If any such payment was received, it must be repaid.

(d) If the insured includes an ineligible person's SSN, EIN, or Identification number on their application, and does not include the ineligible person's share on the acreage report, the policy will not be void but reduced by the SBI's interest in the insured.

E <u>Entity Types</u>

(1) **Individual Entity: Individuals**

Policies written as an individual entity require an SSN, or when applicable, an EIN. When an EIN is applicable, the insured must be listed as a person with an SBI and his or her SSN provided.

(a) The applicant must be competent, of legal age (18 years of age or older) and capable of entering into a binding contract, and have the authority to fulfill the requirements of the contract. If the applicant is less than 18 years old, see subparagraph (6).

(b) The applicant incurs debt (if any) related to production, stores or markets in his/her name, and receives proceeds.

(c) The application covers the individual's share, including the individual's share as a co-owner, joint-operator, partner, or revocable trust; provided the co-ownership, joint-operation, partnership, or revocable trust is not insured separately. Refer to subparagraph (3) for information about the tenant or landlord insuring the other's share.

(d) When more than one member of a family in the same household applies for insurance or the applicant resides in the household of an insured, applicants must provide evidence on a signed statement indicating separate insurable shares. Separate insurable shares are not applicable to spouses unless all the criteria in E (2) are met; refer to E (2) below.

(2) **Individual Entity: Spousal/Married Individual**

(a) If an insured is married, his/her spouse is considered to receive a benefit from the farming operation and, therefore, presumed to have a 50 percent share of the spousal entity/married individual and a SBI for crop insurance program reporting purposes. SBI information (including the spouse's SSN) must be provided by the applicable SCD for new and carryover insureds. However, AIPs may elect not to reduce coverage on carryover policies for the current crop year where the marital status of an insured changes on or after the previous year's SCD for the insured crop when:

1 it is unreasonable to expect the insured to have known or contemplated the need to advise the AIP of the change due to the timing of such event;

2 there is no indication of intent to commit fraud;

3 the unreported spouse is eligible for insurance;

4 the unreported spouse is added as a SBI to the insured's policy and the entity type of the policy changed to a spousal entity type; and

5 the unreported spouse is added prior to any insurance payment being made under the policy.

Information collected for the spouse under this provision must be provided to an assuming AIP for any policy that is transferred.

(b) Only one policy is allowed for spouses **WHEN** the insurable share is owned by husband and wife **even if**:

1 FSA recognizes a married couple that shares in the same farming operation as two "persons" for the purpose of farm program limitations and requires only one contract to participate in FSA programs to be signed by the married couple. Such married couples are considered to be a spousal entity/married individual for crop insurance purposes.

2 They are sole owners of land and farm as landlords, owner-operators, or as tenants independently of their spouses. For example, if a wife

separately owns land, which is operated and managed by the husband as head of a family farming enterprise, only one policy is allowed for the family operation and share. This is also true if such land is all or part of the land farmed by the husband as owner-operator with the proceeds deposited in either the husband's bank account or a joint bank account. In such instances, only one application in the husband's name, wife's name, or both names as co-owners is allowed and either spouse may sign the insurance documents.

(c) Separate policies for spouses are allowed **ONLY IF ALL** of the following criteria are met:

1 Distinct and identifiable records are available proving separate:

a Ownership of land (excluding transfers of interest in a farming operation from one spouse to another);

b Capital;

c Accounting of inputs (e.g., labor and equipment);

d Management;

e Production (e.g., marketing and sales);

2 There is no evidence of intentional misrepresentation or fraud; and

3 Application is made on or before the SCD for the crop year.

(d) **For information regarding death of a spouse and coverage for the surviving spouse, refer to PAR. 132 B (1) (a).**

(3) **Landlord/tenant**

Any entity (individual, partnership, corporation, etc.) may insure a landlord's and/or tenant's share(s). However, if the tenant or landlord has a separate policy for that crop/county, they cannot be insured under another person's policy. For example, a landlord's share cannot be insured under a tenant's policy if the landlord has his own individual policy for that crop/county. Only one application/policy is allowed per person (entity), per crop, per county. When insuring another person's share:

(a) The application must clearly state the tenant will insure the landlord's share or landlord will insure the tenant's share; otherwise, the landlord or tenant must have separate contracts. Evidence of the other party's approval (lease, power of attorney, etc.) must be provided to the AIP and placed in the insured's file.

(b) The landlord(s) or tenant(s) insured by an entity must be listed as an SBI on the entity's application, even if their share is less than 10%. Additionally, there is only a one-line entry on the acreage report showing a 100% share, and the percentage shares of all entities (e.g., tenant's share = 75%; landlord's share = 25%) must be shown in the remarks section of the acreage report or documented and attached to the acreage report.

(4) **Individual Entity: An Individual Operating as a Company/Small Company**

The guidelines for an individual operating as a company are identical to those of an individual. The application must be signed by the owner or authorized representative of the company. A statement from the company which lists the authorized representative must be maintained in the insured's file folder in the service office. A company for this purpose is not a Corporation.

(5) **Individual Entity: Joint and Survivor Interests**

"Joint and Survivor Interests" are applicable in "community property" states in which a husband and wife have joint and survivor interest in insurable acreage and in states where such an interest may be created by deed. In such states, the application is completed in the name of the joint and survivor interest (e.g., "John W. Doe, James C. Smith", or whomever). All persons with an SBI in the insured entity must be listed and the SSN/EIN of each person with an SBI provided.

(a) Both parties must sign the application. Exceptions: husband and wife or when a statement is prepared and signed by both parties showing the authority of either to act as agent for the other for crop insurance purposes.

(b) If either party dies, the contract continues, but a successor-in-interest application must be obtained. The CIH contains information concerning the effective crop year for which the successor-in-interest application must be prepared.

(6) **Individual Entity: Minors or Mental Incompetents**

(a) A minor must provide evidence that an insurable share exists and must have a court-appointed guardian or a parent co-sign the application and other crop insurance documents. **EXCEPTION: Under the CAT level of coverage**, a minor who is competent and capable of entering into a contract may insure a crop without a co-signer.

(b) A mental incompetent may be insured ONLY if a court-appointed guardian signs the documents.

(c) A written statement describing the farming operation and the insurable share must be provided and maintained in the insured's file folder in the service office.

(d) When a minor becomes capable of entering into a binding contract or when incompetency is dissolved, a successor-in-interest application is required. See the CIH for information concerning the effective crop year for which the successor-in-interest application must be prepared.

(e) When a parent or court appointed guardian co-signs the application, it must contain a statement guaranteeing payment of the annual premium.

(7) **Individual Entity: Competent Individuals Represented by Appointees**

If the application is signed by someone other than the individual entity, a Power of Attorney giving that person authority to sign must be maintained in the insured’s

file folder. The Power of Attorney must be considered to be legally executed. Refer to PAR. 26 for more information about Power of Attorneys.

(CAT policies ONLY →

(8) **Individual Entity: Undivided Interests**

Landowners with an undivided interest in land may insure crops on such land under one policy subject to ALL of the following conditions:

(a) The policy covers only insured crop (s) grown on land with an undivided interest. None of the landowners may have other land on which CAT coverage is required.

(b) The total liability for each crop insured under an undivided interest policy must not exceed $2500.

(c) The landowner designated as the named insured is responsible for:

1 Furnishing proof to the AIP that an undivided interest in the land exists;

2 Furnishing the AIP with an agreement signed by all parties authorizing insurance under one policy and designating the landowner responsible for fulfilling all contractual requirements (e.g., filing acreage reports, providing APH production reports, giving notice of damage, etc.);

3 Furnishing the AIP with the names and the SSN/EIN numbers of all landowners sharing in the crop (All landowners must be listed as an SBI without regard to their actual interest in the land.);

4 Applying for insurance and paying the AIP any applicable administrative fee(s); and

5 Distributing any indemnity payments (made to the named insured under his/her SSN/EIN number) to other producers sharing in the crop. **←CAT policies ONLY)**

(9) **Partnerships**

A partnership is a written or verbal (requires an EIN) contract between two or more persons. The essential element of a partnership which distinguishes it from other forms of joint ventures is that each partner has authority to enter into contracts and bind all other members to such contracts. The partnership entity includes General Partnerships, Limited Partnerships, and Limited Liability Partnerships. An EIN is required for entities that are insured as a partnership. All persons with a SBI in the entity must be listed and the SSN/EIN of each person with a SBI provided. At least two SBIs must be provided for data acceptance purposes.

(a) The death, declaration of incompetence, or withdrawal of a partner or termination of the partnership, unless a written partnership agreement provides otherwise. If such event occurs after coverage begins for any crop year, the policy will continue in force through the crop year and terminate at

the EOIP. Any indemnity will be paid to the person or persons determined to be beneficially entitled to the indemnity. Also, refer to PAR. 132 for documentation instructions when this is discovered during loss adjustment activities.

(b) Crops to be insured under the partnership are those in which the partnership has a share and require only one application.

(c) If the entire share of the partnership is not to be insured, an application to cover the share of an individual holding an interest in the partnership may be obtained. This application also covers any other individual interest the applicant may have.

(d) Refer to the CIH for more information regarding SBIs for partnerships.

(10) **Corporations**

(a) A corporation is a legal entity created and operating under state laws of incorporation. The corporation may insure its share as landlord, owner-operator, or tenant. An application must be signed by a person authorized to enter into contracts for the Corporation. A statement must be provided to the AIP indicating in which state the articles of incorporation/organization are on file. Changing officers or stockholders does not affect continuity of the contract.

(b) An EIN is required for entities that are insured as corporations. All persons (entities) with an SBI in the entity must be listed and the SSN/EIN of each person with an SBI provided. At least one SBI is required.

(11) Limited Liability Companies (LLCs)

(a) A LLC is a type of business ownership combining several features of Corporation and partnership structures. Owners are called members, not partners or shareholders, and the number of members are unlimited and may be individuals, corporations, partnerships, joint ventures, other LLCs, etc.

(b) Changing members may not affect continuity of the policy. Refer to the LLC's operating agreement to determine if changing members would affect the continuity of the LLC and, therefore, the continuity of the policy.

(c) A SSN/EIN is required for entities that are insured as LLCs. All persons/entities with a SBI in the entity must be listed and the SSN/EIN of each SBI provided. Refer to the CIH for more information regarding required SBIs.

(12) **Co-ownership/Joint Venture/Joint Operations**

A type of entity composed of two or more parties who engage in a farming operation jointly; pool their resources; contribute land, labor, or machinery; share in expenses; and at the end of the year divide the profits, according to their interests. No person is authorized to bind any other person in any business transaction as is possible under a partnership.

(a) The application must be signed by all parties or by the authorized representative. If an authorized representative signs, an agreement must be executed by co-owners/joint venture/joint operators giving the representative authority to sign, and must be maintained in the insured's file folder in the service office.

(b) If the entire share of the co-owners, joint venture, or joint operation entity is not to be insured, an individual application may be obtained to cover the individual share of a co-owner or joint operator and any other individual interest the applicant may have. Such an application will not cover the share of a partnership.

(c) Death or withdrawal of one of the parties terminates the insurable interest at the end of the crop year. If such event occurs after coverage begins for any crop year, the policy will continue in force through the crop year and terminates at the EOIP. Any indemnity will be paid to the person or persons determined to be beneficially entitled to the indemnity if a Transfer of Right to Indemnity is not completed. Also, refer to PAR. 132 for documentation instructions when this is discovered during loss adjustment activities.

(d) An SSN or EIN is required for co-ownership/joint venture/joint operations. All persons with an SBI in the entity must be listed and the SSN/EIN of each person with an SBI provided. Refer to the CIH for more information on SBIs for co-ownerships/joint venture/or Joint Operations.

(13) **Estates**

The application covers the share owned by an estate and must be signed by the authorized court-appointed officer or executor. An SSN or EIN is required for estates.

(a) Upon settlement of the estate and the discharge of the court-appointed officer, the contract is cancelled and a new application is required to maintain insurance protection.

(b) Removal or discharge of a court-appointed officer and appointment of another does not terminate the contract.

(14) **Trusts**

The application covers the trust's interest (not the beneficiaries' interest). The application must be signed by the administrator or trustee appointed to administer the business affairs of the trust. An SSN or EIN is required for trusts.

(a) **Revocable trusts** are trusts that can be changed, revoked, or cancelled at any time by the grantor. Reporting requirements for revocable trusts use

the same guidelines as individual entities including spousal (e.g., if operating as an individual and a revocable trust, the revocable trust's interest would only be covered by the individual policy. If both spouses have a revocable trust, the trusts would be covered under the spousal/married individual policy and the criteria for separate policies would apply. A SSN or EIN is required for the trusts. The Grantor of a revocable trust has a SBI in the trust.

(b) Irrevocable trusts require an EIN and/or SSN.

(15) **Trusts administered by Bureau of Indian Affairs**

Native American land is frequently held in trust by the Bureau of Indian Affairs (BIA) or Tribal governing body and leased to operators.

(a) Native American land held under trust is processed in the same manner as land held in an irrevocable trust. The name of the trust is the named insured. Often BIA trusts are referred to as allotments, identified by an allotment number (i.e., BIA Allotment Number 0006, which is the name of the trust and consequently the named insured). A separate policy is required for each allotment with different individual owners. Linkage for certain USDA farm program benefits for individual Native Americans who own parcels of an allotment are established by that trust.

(b) If the trust agreement provides that operators of leased land purchase crop insurance, a power of attorney will be executed by the BIA granting the operator the authority to purchase crop insurance on behalf of the trust.

(c) If the BIA trust does not have an EIN, a nine-digit number may be established as follows: the first two digits identify the state, the next three, the county, and the last four the allotment number.

All other Native American entities will be insured as applicable (i.e., individuals, partnerships, joint operators, etc.) with the exception of those tribal ventures that do not meet the requirements for joint ventures. Any such entity will be treated as a BIA trust for crop insurance policy processing purposes.

(16) **Other Entities**

The following entities are generally assigned an EIN for tax purposes.

(a) Receiver or Liquidator. Receivers or liquidators may insure crops under their administration. The application must be signed by the person authorized by the court to administer business of the receivership.

(b) Public Agencies. State, county, or municipal offices may insure their share.

1 A state-owned entity may insure their own share. The application must be signed by the person having authority to enter into a contract for the entity.

2 A county-owned entity may insure their share. The application must be signed by the person having authority to enter into a contract for the entity.

3 A city-owned entity may insure their share. The application must be signed by the person having authority to enter into a contract for the entity.

4 Public schools may insure their share. The application must be signed by the person having authority to enter into a contract for the entity.

(c) Association, Clubs, Private Schools and/or Tax Exempt Organizations. To act as a representative for any principal, an entity (or an individual, etc.) must provide evidence of authority (preferably a power of attorney) or a signed statement indicating where such authority can be verified. If authority is by verbal agreement, a statement is required from the principal for verification. The signature of the person having authority to enter into a binding contract for the entity is required.

F Correctable Entity Names

(1) **General Information**

Situations have arisen where the named insured is not the person with the insurable interest in the crop, yet the named insured does bear financial risk of the crop. For example, an individual may incorrectly obtain a policy in the individual's name when a corporation (wholly owned by the individual) actually has the insurable interest in the crop. The individual does have a direct financial interest in the crop due to being the sole owner of the corporation. Additionally, the individual may have formed the corporation several years ago, failed to change the name on the insurance policy to the corporation but complied with every other term of the policy, including payment of premium, until the discrepancy in the named insured associated identification number is discovered at loss time or during a compliance review. In this instance, whether the policy is in the corporation's name or the individual's name, there would be no difference in unit structure, approved yields, production guarantees, premium rate, indemnities, etc.

(2) **Correctable Entity Names**

When the following criteria are met, approved insurance providers (AIPs) may grant relief to correct the named insured and the associated identification number in those limited situations as described below:

(a) The following conditions must be met:

1 The named insured is required under current policy provisions and procedures to be reported as a substantial beneficial interest (SBI) holder in the person who is the correct named insured, or conversely the person who is the correct named insured must previously have been reported as a SBI holder for the person with the policy;

2 The named insured can prove they are the owner, shareholder or member of the person who is the correct named insured, or the person who is the correct named insured is the owner, shareholder or member of the named insured;

3 If the correct named insured also participates in any FSA program, the AIP must verify the correct named insured is also contained in FSA information. If the correct named insured does not reconcile, the policy cannot be corrected until the FSA information is corrected unless the policy or FCIC issued procedures provide otherwise (e.g., FSA information shows the entity as a joint venture, but FCIC procedures allow an individual to insure their share of a joint venture when 100 percent of the joint venture is not insured, or FSA shows a husband and wife, but FCIC procedures provide for an individual policy with the spouse shown as having a substantial beneficial interest);

4 There is no evidence of fraudulent or material misrepresentation;

5 The Actual Production History (APH) records, approved yields, production guarantees, unit structure, premium rates, indemnities, coverage level, etc. is maintained when the named insured is corrected (i.e. APH history must not have been lost or altered, production guarantees, unit structures, etc. must not have been altered);

6 The person who is the correct named insured is eligible for insurance;

7 The reported identification number matches the reported named insured (e.g., an individual reported their correct social security number on the policy; however, the correct named insured is a corporation wholly owned by the individual);

8 Such discovery is made for the 2006 or subsequent crop years.

Exception: If all members of a partnership reported their respective share of the partnership under their individual policies, the error may be corrected by establishing a policy for the partnership (with the appropriate acreage, unit structure, etc., and reducing the individual policies by the acreage and share that is not theirs as individuals, but rather is the partnership's) for the next crop year; AND

9 If this authority is used to grant relief, then these procedures must be referenced as part of the documentation for AIP's determination to grant relief and maintained in producer's file.

(b) Correction of the named insured is limited to the following situations if the criteria in (a) above are met:

1 A corporation or LLC, wholly owned by an individual, owns the insurable crop, but the crop insurance policy is in the individual's name. In this case, the individual's policy would be discontinued for the current crop year and a policy for the corporation or LLC would be provided.

2 An individual owns the insurable crop, but the crop insurance policy is in the name of a corporation or LLC, wholly owned by the individual. If the individual is reported as a SBI to the corporation or LLC, the

corporation's or LLC's policy could be corrected for the current crop year to reflect the individual.

3 A farm is a partnership made up of individuals and each of the individuals has insured their share of the partnership under their separate individual policies. The individuals' separate policies would be continued for the current crop year, and a new policy for the partnership provided for the next crop year. If the individual producers also have a separate insurable share in acreage that is not a part of the partnership, such acreage would continue to be insured under the separate individual policy(s).

4 A corporation, LLC, joint operation/joint venture/co-owner, partnership or trust, wholly owned or granted by an individual and spouse, owns the insurable crop, but the crop insurance policy is in the individual's name with spouse listed as a SBI. In this case, the individual's policy would be discontinued for the current crop year and a policy for the corporation, LLC, joint operation/joint venture/co-owner, partnership or trust would be provided.

5 An individual and spouse own the insurable crop, but the crop insurance policy is in the name of a corporation, LLC, joint operation/joint venture/co-owner, partnership or trust, wholly owned by the individual and spouse. If the individual and spouse are reported as a SBI to the corporation, LLC, joint operation/joint venture/co-owner, partnership or trust, the corporation's, LLC's, joint operation/joint venture/co-owner's, partnership's or trust's policy could be corrected for the current crop year to reflect the individual with spouse reported as SBI.

SECTION 2 INSURED'S CONTRACT INFORMATION

15 CONTRACT INFORMATION AND VERIFICATION

Before the appointment and inspection are made, thoroughly review all documents in the contract folder or data from the processed documents that are applicable to the inspection. Some information must be verified by the adjuster at the time of the on-the-farm visit. The following paragraphs contain verification requirements of the data on these forms.

16 APPLICATION

Before a loss adjustment inspection can be done, the AIP must assure that there is a properly accepted application confirmed by a policy confirmation (defined in Exhibit 1). For further information regarding the application , refer to the CIH.

17 CONTRACT CHANGES

Prior to assignment of the loss inspection, the AIP is responsible for verifying any timely filed contract change for the crop and crop year that would affect the loss inspection and indemnity payment. If it is discovered during the loss inspection that a timely contract change has not been processed, contact your AIP for further instructions. Refer to the CIH for more information regarding changes in price election, level, cancellation, and successor-in-interest.

18 WRITTEN AGREEMENT

Verify whether any written agreement is in effect for the crop and crop year being inspected. If there is, read the entire agreement and determine how it affects the crop being inspected; e.g., a practice that is not otherwise insurable is insurable via this agreement, etc.

19 APH FORM (PRODUCTION AND YIELD REPORT)

A Review Approved APH Yields**.** An APH form with the current approved APH yield must be on file in order to complete a claim. Unless subparagraph B applies, the AIP will verify the approved APH during the loss adjustment inspection, as follows:

(1) Review the actual yields certified by the insured for reasonableness.

(2) Perform a cursory review to determine if the APH yield was calculated accurately.

(3) Compare the approved APH yields to the acreage report. Verify that the correct APH yields have been entered on the acreage report (by unit, Practice/Type/Variety, map area, etc.).

(4) Conduct additional reviews and/or make corrections, as appropriate, if:

(a) A current approved APH yield is not on file;

(b) Yields certified do not appear to be reasonable; or

(c) The approved APH yield appears to have been calculated incorrectly. If a correct/current APH yield cannot be verified before an inspection must be made, and the insured has a *bona fide* contract and claim, the inspection may be made but the claim cannot be finalized (do not obtain the insured's signature).

B Required Mandatory Reviews Requiring APH Field Reviews. Refer to Appendix IV of the SRA for information and instructions.

20 OPTIONS AND ENDORSEMENTS

A High-Risk Land Exclusion Option

If an option is in effect, verify that:

(1) None of the acreage designated as high risk is included with insured acreage on the acreage report. If such acreage is included as insured acreage on the acreage report, revise the acreage report to correctly reflect the insured and uninsured acreage. (It is possible that the insured may have this high-risk land insured under a separate CAT policy - see the CIH for more information), and

(2) Harvested production from the acreage designated as high risk has been kept separate. If it has not, refer to the commingled production procedure in PAR. 126.

B Review of Other Option Forms or Endorsements

Review any other option form or endorsement that pertains to the crop and crop year being inspected. Make any appropriate verification as it pertains to the provisions of the option or endorsement. If there is insured and uninsured acreage, verify that harvested production has been kept separate or is allowed to be separated by meeting the criteria in PAR 126. If it has not, refer to the commingled production procedure in PAR. 126.

21 ACREAGE REPORT

A General Information

(1) If it is after the ARD, there must be an acreage report on file with the AIP before a claim can be filed.

(2) Separate line entries are required on the acreage report, as follows:

(a) Basic, enterprise, and optional units, and within each unit, separate line entries for differing practices, types, varieties, shares, APH yields, and risk classifications.

(b) For whole farm units, a separate line for each crop and for each crop with differing practices, types, varieties, shares, APH yield, and risk classifications;

(c) Timely planted acres (full production guarantee);

(d) LP acres, with a separate line entry for each day of planting during the LP period (with a reduced production guarantee based upon the number of days planted late), or a separate line entry for acres of a crop prevented from planting after the LP period or a separate line entry after the FPD for crops that do not have a LP period;

(e) Planted acres of the first insured crop for which 100% of the premium is due and a separate line of first insured crop acreage for which 65% reduction of the premium is applicable.

(f) Eligible PP acres that are eligible for 100% of the PP payment; and for which 100% of the premium is due will be a separate line from eligible PP acres that will have a 65% reduction of the PP payment and which will result in a 65% reduction in premium.

B Late-Filed Acreage Reports or Tonnage Report-Raisins

When the insured DOES NOT report any acreage (or tonnage for raisins) for the insured crop by the established reporting date, the AIP may determine the acreage (tonnage for raisins) and establish premium and liability or the liability may be denied in accordance with procedures in PAR. 74. Late-filed acreage reports are not allowed for prevented planting acreage.

C Verification of the Acreage Report Information at Loss Time

(1) General Information

Verify with the insured the correctness of all acreage report information, including whether all crop acreage (insured and uninsured) has been reported. See PAR. 127 for detailed information on unreported units. For non-loss units, verifications other than with the insured do not have to be made. However, for loss units, verification with the insured as well as other field verification requirements must be made. Acreage must be "determined" for loss units but not non-loss units. Acreage determinations must be made in accordance with PAR. 80.

(2) Prior to a farm visit, if an error is found in the acreage report information requiring a revised acreage report, complete an on-the-farm inspection and continue verification of information on the acreage report as follows: (Refer to Part 2, Section 3 of this handbook for revised acreage report instructions.)

(a) Crop

Verify that the crop acreage was actually planted and that the crop is insurable in accordance with the crop insurance contract. If planting is questionable, sample areas of the field to find evidence of planted seed, request seed tickets, and any other records needed to verify actual planting. If insurability is questionable, further investigation is needed relating to the area questionable, such as seed variety being adaptable to area, that seed planted was viable seed, etc. Contact your field supervisor for assistance and guidance. Refer to PAR.'s 44 and 45 for more details on insurable acreage and insurable crop.

(b) Planting Dates

Verify the planting dates with the insured and by field inspection.

1 If the insured confirms these dates, but the reported timely-planting dates or reported late-planting dates do not correspond to the growth stage of the crop in the field, taking weather conditions into consideration, further investigation is needed. Request seed ticket receipts from the insured or where the seed was purchased. The adjuster or other AIP representative will verify with the seed dealer the amount of seed purchased and date purchased and whether any seed was returned, etc., to help make determinations of planting dates. It may be necessary to visit with neighbors or others who may frequently travel past the fields in question.

2 Revise the acreage report if any acreage reported timely was planted after the final planting date or if any of the reported late-planting dates are incorrect, revise the acreage report accordingly. Refer to the late-planted acreage procedures in Part 5.

(c) Acres reported

1 Verify that all insurable and uninsurable acreage for the crop has been reported. If any of the acreage reported as insurable is uninsurable,

revise the acreage report to remove such acreage. Refer to PAR. 44 for information about uninsurable acreage.

2 For annually planted crops: If it is past the final planting date, verify that all acreage planted has been reported for all fields. Unreported acreage is uninsured acreage.

(d) Practices

1 Verify the actual planting practices carried out by the insured. Verify that the actual practice is insurable, as shown in the actuarial documents or Written Agreement, if applicable.

2 If the practice is not insurable, revise the acreage report to remove the uninsurable acreage, and verify that the production from the uninsured acreage and insured acreage has been kept separate. If production was not kept separate, follow the procedures in PAR. 126 for commingled production. Use the actual planting practice on the claim form except as explained in PAR. 42.

(e) Legal Descriptions and/or FSNs

Verify the physical location against the legal descriptions and/or FSNs on the acreage report by using FSA documents or other verifiable documents as references during inspection of the fields.

1 Verify that the type, class, or variety actually planted is insurable as defined in the crop policy/endorsement (or if applicable, by Written Agreement), and that it has not been excluded by the actuarial documents.

2 If the type, class, or variety is found to be uninsurable, revise the acreage report to remove all acreage with the uninsurable, type, class, or variety.

(f) Share

Verify with the insured, and as instructed in PAR. 13, that the share reported is correct. Shares cannot be increased at loss time. However, if the share is lower at the time of the claim, the claim must reflect the correct lower share.

(g) Person's sharing in the crop

Verify with the insured and via lease-agreements or FSA records or other verifiable documents, the name of the person(s) sharing in the crop. Refer to PAR. 13.

(h) Risk classification

The AIP must verify that the risk classification is correct by verifying: (1) the adjuster-verified physical location of the acreage, against the actuarial documents (or written agreements, if applicable); (2) FSA documents if FSNs are applicable; and (3) if a FCI-32 (Producer Classification) is

applicable, the AIP must verify the classification listed on the acreage report against what is listed on the FCI-32 for the insured.

(i) Special Purpose Information

This column is used for a variety of entries. It may contain contract prices for crops requiring them (e.g., green peas), etc. Verify the accuracy of this information using pertinent documents needed to verify this information.

(j) Unit Number

1 AIPs must verify that the legal description and FSA FSN for each unit on the acreage report is the same as on the APH form.

2 Verify that the unit numbers reported are in accordance with the applicable individual crop policy or endorsement or, if applicable, the unit division guidelines in the actuarial documents or Unit Division Option.

(k) Remarks. Review any information recorded in the remarks section that may be pertinent to this inspection.

(3) Uninsured or Uninsurable Acreage

Verify that any harvested production from the uninsured or uninsurable acreage was kept separate from the insured acreage. If it was not, refer to the commingled production procedure in PAR. 126.

D Misreported Information (MI) on Acreage Reports

The insured must submit annually all required acreage report information for all insured crops on an annual acreage report(s) to the AIP. The insured is responsible for the accuracy of all information contained in those acreage reports. The insured is responsible for verifying the information on all such reports prior to submitting them to the AIP. The following subparagraphs identify when the misreported information (MI) provisions in section 6 (g) (2) of the Basic Provisions apply and do not apply:

(1) **Planted Acreage:** MI provisions apply to the acreage information reported as insured acreage. However, the provisions do not apply to any acreage reported as insured acreage that is not insurable acreage in accordance with the policy provisions for insurable acreage, as outlined in PAR. 44.

(2) **Prevented Planting Acreage.** MI provisions apply to reported insurable PP acreage anytime the insured misreports any actual information (for example, when there are only 80 acres but the insured reported 100 acres). However, if any of the acreage reported as PP is not eligible for a PP payment, the MI provisions do not apply (for example, when the insured reported PP on 500 actual acres, but due to eligibility requirements, 400 of the 500 acres were determined to be ineligible for prevented planting coverage).

*** (3) MI determinations are based on the information for the unit acres reported on the acreage report for each type of claim; i.e., only the information from the reported
*** replanted acres are used for MI determinations for replant payment claims, only

the information from the reported PP acres are used for PP payment claims, and only the information for the planted acres (including replanted acres) are used for indemnity claims.

(4) If the insured unintentionally:

(a) **Under-reports liability** for the unit (reported information results in liability lower than the liability determined by the AIP to exist), the loss liability for the unit will be held to the liability reported by reducing the production guarantee or amount of insurance on the unit by the liability adjustment factor (LAF). In the event the insurable acreage is under-reported for any unit and a claim for indemnity is submitted, all production or value to count from all of the insurable acreage (reported and not reported) will count against the unit guarantee.

(b) **Over-reports liability** for the unit (reported information results in liability higher than the liability determined by the AIP to exist for the unit, the information contained in the acreage report will be revised to be consistent with the correct information. Any overstated premium resulting from the over-reported liability will be reduced accordingly and refunded to the insured if already paid.

(5) Misreported Information Factor (MIF). In addition to the LAF specified in (4) (a) above, if the misreported information results in liability greater than 110.0 percent **(over-reported liability in excess of 10%)** or lower than 90.0 percent **(under-reported liability in excess of 10%)** of the actual liability determined for the unit, any indemnity, prevented planting payment, or replanting payment will be reduced by a MIF.

The MIF represents the amount of reduction that is proportionate with the amount of liability that is misreported in excess of the tolerances stated above. The examples below show how the MIF is calculated. Refer to Exhibit 18 to determine what sequence the MIF is applied in the Indemnity, PP payment, or replanting payment calculation.

(a) **EXAMPLES**:

1 **Steps when the reported liability is over-reported**.

a Reported unit liability is $120 divided by $100 determined (actual) unit liability = 1.200000 over-reported liability.

b Over-reported unit liability 1.200000 minus 1.100000 tolerance = .100000 (10% in excess of tolerance).

c 1.000000 minus .100000 (excess of tolerance) = .900000 (MIF). Always round factor to six decimal places.

2 **Steps when the reported liability is under-reported.**

a Reported unit liability is $100 divided by $120 determined (actual) unit liability = .833333 under-reported liability.

b Tolerance .900000 minus .833333 under-reported unit liability = .066667 (6.7% in excess of tolerance).

c 1.000000 minus .066667 (excess of tolerance) = .933333 MIF. Round all calculations to six decimal places.

(b) For the purpose of determining a MIF, share will be excluded from liability. Refer to the definition of liability in Exhibit 1.

(6) If the AIP has evidence the insured intentionally misreported (misrepresentation) acreage information, the voidance provisions in section 27 of the Basic Provisions apply. If the AIP does not have evidence that the acreage information was intentionally misreported (misrepresentation), the MI provisions apply.

E Revised Acreage Report. Acreage reports cannot be revised except as outlined in PAR.s 28 and 29.

22 HAIL AND FIRE EXCLUSION

A Eligible Acreage

(1) The hail and fire exclusion applies to all acreage of the crop insured at an equivalent to a minimum 65 percent coverage indemnified at 100 percent price election, unless the Basic Provisions for the plan of insurance does not allow exclusion of hail and fire coverage.

(2) Due to an insured's ability to select different price elections for different types of dry beans, a single dry bean policy may have some types at sufficient coverage to exclude hail and fire and some with less than the minimum coverage required. When this occurs, hail and fire is excluded only from acreage with at least minimum coverage.

B Verifying Adequate Liability

(1) The AIP must ascertain/verify that for the crop year of the claim, the amount of liability under the hail and fire policy equals or exceeds the liability amount that would have been provided by the MPCI policy for that crop year. Liability for acreage that is eligible for prevented planting but was not planted is NOT considered and the premium is not reduced on such acreage.

(2) When ascertaining whether there is adequate liability, uninsurable acreage must be considered. If uninsurable acreage is involved, the total liability under the hail and fire policy may exceed the MPCI crop insurance liability due to the extra acreage (uninsured acreage), yet the insured still MAY NOT have adequate hail and fire liability to allow exclusion of hail and fire coverage the MPCI policy.

Example:

MPCI coverage is:	**Hail & Fire coverage is**:
100 insured acres (MPCI)	200 insured acres
100 uninsured acres	$10,000 total liability
$10,000 total liability (MPCI insured acres)	$50 per acre liability
$100 per acre liability	($10,000 ÷ 200 insured acres
($10,000 ÷ 100 insured acres	= $50 per acre liability)
= $100 per acre liability)	

VERIFICATION - Based on the above, the insured's hail and fire liability of $50 per acre does not equal or exceed the $100 per acre liability that would have been provided by the MPCI policy; therefore, the insured does not have adequate liability to exclude hail and fire from MPCI coverage.

C Damage Exceeds Deductible. If damage results from hail or fire and a hail and fire exclusion is in effect, the adjuster will make an appraisal for uninsured (excluded) causes of loss if the damage exceeds the deductible established in the policy. Use the following instructions for computing and entering the appraisal in the "Uninsured Cause" column.

(1) Original hail or fire liability has NOT been reduced.

(a) Make an entry in the "Uninsured Cause" column, as described below, ONLY if ALL the following conditions have been met:

1 Hail or fire damage has occurred on the unit;

2 Hail and fire exclusion is in effect; and

3 The original amount of hail or fire liability has NOT been reduced.

(b) Enter the appraisal determined as follows:

1 Determine the weighted AVERAGE (based upon gross acres) percent of hail or fire damage (from the hail or fire claim) for the unit.

Weighted-average-damage example: Suppose a unit of wheat (270 acres) is covered by a MPCI policy (65% coverage level) with hail/fire excluded. Hail damages the unit as follows (percent of damage as shown on the private hail/fire carrier's loss form):

80 acres @ 0%	80 acres X .00 =	0.0
55 acres @ 48%	55 acres X .48 =	26.4
75 acres @ 66%	75 acres X .66 =	49.5
60 acres @ 100%	60 acres X 1.00 =	60.0
	270 acres	135.9

135.9 ÷ 270.0 = .503 = 50.3% weighted-average damage percent for unit.

2 Determine the "hail/fire exclusion appraisal factor" either by:

a calculating as instructed in steps c and d below, OR

b skip steps c and d and obtain the factor representing the insured's coverage level percent and weighted average percent of hail/fire damage from the "Hail/fire Exclusion Appraisal Factor Chart" in Exhibit 6.

Example: "Hail/fire Exclusion Appraisal Factor" derived from chart in Exhibit 6 and based on example in (b) 1 above (65% coverage level).

50% hail/fire damage =	.2308
.3% hail/fire damage =	.0046
50.3%	.2354

c **(Do not use this step if the "hail/fire exclusion appraisal factor" was obtained from the Hail/fire Exclusion Appraisal Factor chart; go to step in e below.)** For each coverage level, the "deductible" is 100% minus the coverage level percent (e.g., 100% - 65% = 35%). Subtract the percent "deductible" from the weighted average percent of hail or fire damage (e.g., 50.3% weighted ave. hail damage - 35% "deductible" = 15.3%).

d **(Do not use this step if the "hail/fire exclusion appraisal factor" was obtained from the Hail/fire Exclusion Appraisal Factor chart; go to step in e below.)** Multiply the result in step c times the applicable 2-decimal level factor to determine a 4-place factor (hail/fire exclusion appraisal factor). Determine the 2-place factor as follows: 100 divided by the coverage level percent in step c (e.g., 100 ÷ 65 = 1.54 for the 65% coverage level). Determine hail/fire exclusion appraisal factor as follows: .153 X 1.54 = .2356.

e Multiply the factor determined in step d above (or as derived from the Hail/fire Exclusion Appraisal Factor Chart," Exhibit 6) times the per-acre guarantee for the acreage. (If the crop is a dollar plan crop, the per-acre guarantee will be the per acre dollar amount of insurance, unless the instructions on the Production Worksheet for the uninsured cause column shows the entry in bu., lbs, etc.). Enter the result in the "Uninsured Cause" column of the claim form (e.g., .2356 X 4.6 bu. guarantee (rounded to the nearest tenth) will equal a 1.1 bushel appraisal). Make no entry for "0" appraisals.

(2) Original Hail or fire Liability HAS BEEN reduced

(a) Make an entry in the "Uninsured Cause" column, as described below, ONLY if all of the following conditions have been met:

1 Hail or fire damage has occurred,

2 A hail/fire exclusion is in effect, and

3 The original amount of hail and fire LIABILITY HAS BEEN REDUCED.

(b) Enter the appraised amount of UNINSURED hail or fire damage per acre calculated as follows: Divide the hail or fire insurance indemnity per acre by the original hail and fire insurance liability per acre. Multiply the result by the guarantee per acre divided by the coverage level percentage, and this result will be the appraisal for uninsured causes.

EXAMPLE:

Assume insured has the following:

MPCI guarantee per acre	= 90.0 bu./acre
MPCI coverage level	= 75% (or .75)
MPCI liability	= $180/acre
Original private hail/fire liability	= $200/acre
Reduced private hail/fire liability	= $150/acre

(reduced due to an MPCI insured cause of loss)

Since the private hail/fire liability has been reduced below the MPCI liability ($150 an acre versus $180 an acre), the "EXCEPT THAT" clause in the Hail and Fire Exclusion provisions applies.

Private hail/fire indemnity = 30% loss X $150/acre = $45/acre indemnity

$45/acre private hail/fire indemnity ÷ $200/acre original private hail/fire liability = .2250 X 90.0 bu./acre MPCI guarantee = 27.0 bu./acre appraisal
75 coverage level

The Hail/Fire Exclusion Factor Chart is not applicable for this calculation.

23 ASSIGNMENT OF INDEMNITY

A General Information. A prescribed form signed by the insured to assign the right to an indemnity to a third party. The assignment applies to all acreage of the crop covered under the policy. Refer to the CIH for more detailed information.

B When Made? Assignments of indemnity may be made after acceptance of the application but prior to the transmittal of a claim for processing an indemnity payment.

C Life of Assignment. An assignment is in effect only for the crop year of the assignment.

D Replant Payment and Assignment. Issuance of a replant payment for any insured unit does not restrict the insured from assigning the right to an indemnity to another party.

E Assignment of Indemnity and Transfer of Right to an Indemnity. If a timely signed, Assignment of Indemnity and a timely signed Transfer of Right to an Indemnity for the crop and crop year are on file, and no release for either document is found, the earliest processed document will take precedence.

F Release. The Assignment of Indemnity may be released by the assignee submitting a signed statement of release showing the insured's name, mailing address, contract number, and crop(s). If it is discovered during the loss inspection that there is a release that has not been submitted or processed, document this on a Special Report, and attach it and the release statement to the claim form.

G Claim Instructions. Record whether an Assignment of Indemnity is in effect by completing the appropriate entry block (line) on the claim form, or in the absence of an entry block (line), record the information on an attachment or in the narrative of the claim form.

24 TRANSFER OF RIGHT TO AN INDEMNITY

A General Information. A prescribed form used when an insured wishes to request a transfer of the right to an indemnity for a crop year on any part of the share and/or acreage in a unit when the transfer of ownership or share in the crop occurs during the insurance period. Therefore, a transfer of part or all of the ownership of the insurable share and/or acreage must occur before the earliest of the:

(1) Date harvest was completed on the unit,

(2) Calendar date for the EOIP, or

(3) Date the entire crop on the unit was destroyed, as determined by the AIP.

B Approval. The transfer is subject to approval by the AIP and to any outstanding Assignment of Indemnity made by the transferor prior to the date of transfer.

C Ownership Transfer. Ownership of the insured crop MUST HAVE BEEN transferred prior to the EOIP. The completed and signed transfer form must be submitted prior to processing the claim.

D Release. The Transfer of Right to an Indemnity may be released by the transferee submitting a signed statement of release showing the insured's name, mailing address, contract number, crop(s), and unit(s). If it is discovered during the loss inspection that there is a release that has not been submitted or processed, document this on a Special Report, and attach it and the release statement to the claim form.

E Life of Transfer. The transfer established by the Transfer of Right to An Indemnity is effective only for the crop year specified. For succeeding crop years, if the transferee does not have a crop insurance contract in force for the succeeding crop year but wishes to continue insurance, the transferee must apply for insurance by the sales closing date for the crop.

F Claim Instructions

(1) **Transfer in Effect?** Record whether a Transfer of Right to an Indemnity is in effect by completing the appropriate entry block (line) on the claim form; or in the absence of an entry block (line), by recording the information on an attachment or in the narrative of the claim form.

(2) **How Many Claims Are Prepared?** Prepare only one claim form for the loss on the unit. Account for all the acreage, production, and share. The transferor's name must appear on the claim form as listed on the latest policy confirmation.

(3) **Required Signatures on Claim Form**

(a) **Partial Transfer**: For a partial transfer, the insured and transferee(s) must sign claim (transferee should sign below the transferor's signature).

(b) **Complete Transfer:** For a complete transfer, the transferee must sign the claim.

25 NOTICE OF PREVENTED PLANTING OR NOTICE OF DAMAGE OR LOSS

The insured is responsible for providing to their AIP, a notice of prevented planting or notice of damage or loss for planted crop acreage within the prescribed time stated in the policy/endorsement/crop provisions. The Basic Provisions state the insured may make the notice by telephone or in person, but the insured must confirm the notice in writing within 15 days. A form or card meeting FCIC-form standards for a Notice of Prevented Planting or Notice of Damage or Loss (Exhibit 15) is used by the insured to file written notice to the AIP.

A AIP's Responsibilities

(1) Prepare and distribute the notice of damage to the appropriate parties. (It is suggested that agents (or representatives taking notices of damage) are provided with instructions to obtain information pertaining to **companion contracts**

(insured's shareholder in the loss-affected unit has a multiple peril contract); i.e., name of the shareholder's AIP; and in the absence of this or if it is not known whether the shareholder has a multi-peril contract; the name, address, and telephone number of the shareholder.

(2) Remind insureds of their responsibilities, including but not limited to (the following is not applicable to prevented planting notices):

(a) continuing to care for the crop;

(b) leaving representative samples/strips as provided in the policy/endorsement/crop provision when notice of damage has been given 15 days prior to or during harvest;

(c) keeping production separate for each unit and for each practice having separate APHs, etc.; and

(d) keeping production from 1st and 2nd crop acreage separate; e.g., 100 acres of soybeans is first crop acreage and 200 acres of soybeans is second crop acreage. The soybean production from the 200 acres of second crop acreage is required to be kept separate from the production from the 100 acres of soybeans that is first crop acreage.

(3) Assign notices of damage to adjusters as quickly as possible to assure timely service to the insured.

(4) Assure that, if at all possible, **companion contracts** are adjusted at the same time, as follows:

(a) If the companion contract is serviced by the same AIP, the AIP will make arrangements to have both contracts adjusted by the same adjuster.

(b) If the companion contract involves a different AIP, the AIP will notify the other AIP, if known, immediately of the situation. It should be encouraged that adjusters from different AIPs adjust the claim together; however, if either AIP is unable to adjust the claim, the other AIP will make the loss inspection and provide the necessary documentation to the AIP unable to be present on the loss inspection. It is expected that the number of times this situation occurs will be minimal.

(c) When only one AIP completes a loss inspection, the other AIP will be provided legible copies of the appraisal worksheet (when applicable) and claim forms. At their discretion, both AIPs may review the loss inspection at a later date for quality assurance purposes.

(d) In the event a loss inspection is completed by one AIP and the other AIP disagrees with the original findings, representatives from both AIPs involved will meet and resolve the discrepancies. If the discrepancies cannot be resolved, each representative will follow their respective AIP’s instructions.

(e) If upon receipt of a companion contract, it is discovered that an inspection has already been made by the other AIP, the claim may be completed based on the other AIP's findings, **PROVIDED** the AIP agrees with the original findings of the other AIP. (Refer to PAR. 84 C regarding production

determination when crop shares are involved.) If there is reason to disagree with the findings of the other AIP, follow the same procedure outlined in PAR. 25 A (4) (d).

(f) When a loss inspection indicates the need for a good farming practice decision, AIPs will work together to document the production methods carried out by the insured, obtain verifiable receipts, conduct research on the production methods, and make a decision. If AIPs are unable to make the decision, refer the request for a determination to the RMA RO. Each AIP will notify its insured in writing of the good farming practice decision. The decision applies to all insured shareholders on the acreage. Refer to PAR.s 124 and 140 for additional information.

(5) Use the instructions for delayed notice inspections in PAR. 69 if the insured failed to provide notice within the time prescribed in the policy provisions.

B Adjuster Responsibilities

(1) Accepting Notices. Follow the AIP's instructions for accepting notices of loss.

(2) When the insured has less than 100 percent share of a loss-affected unit and the claim form does not indicate or the AIP has not provided the information indicating whether the shareholder has a multi-peril contract, question the insured to determine whether the OTHER person sharing in the unit also has a multi-peril contract. Contact the AIP for further instructions if the other person sharing in the crop unit has a multi-peril contract.

(3) Review all information from prior inspections for the crop(s) being inspected to determine if any information from these inspections (appraisal worksheets, maps, claim form, special reports, etc.) is pertinent to the inspection being performed.

26 POWER OF ATTORNEY

A AIP's Responsibility

The AIP will provide the adjuster with the name of the party who can act on behalf of the insured to submit and sign crop insurance documents and assure that anyone other than the insured who has signed loss related forms or claims is authorized to do so.

B Conflict of Interest and Powers of Attorney (POAs). Refer to PAR. 7 I for information pertaining to conflict of interest as it relates to Power of Attorneys.

C Adjuster Responsibility

If an individual other than the insured states they are acting in behalf of the insured, and the AIP has not provided information that this party has authority to act on behalf of the insured, do not allow signatures until it is verified with the AIP that an acceptable Power of Attorney is on file granting such authority to this individual.

D Acceptable POAs for Crop Insurance Purposes

A legally executed POA signed by the insured granting authority for crop insurance documents to be signed and submitted by a third party. **A legally executed POA would include:**

(1) **Those that are executed according to Federal authorities or other authorities that may exist**. An example would be a FSA POA that specifically grants the third party authority to sign specific crop insurance documents or all crop insurance documents. **A FSA POA that does NOT specifically grant authority to sign some or all crop insurance documents is NOT an acceptable POA for crop insurance purposes.**

(2) **POA formats that are considered legally executed by the applicable state** and must give the appointee the authority to sign crop insurance documents. In states that require the POAs to be acknowledged (notarized), the signatures of the individual and appointee must be notarized. In states that do not require the POA to be notarized, the signatures of the individual and appointee must be witnessed and the signature of the witness obtained on the document.

SECTION 3 REVISED ACREAGE REPORTS

27 GENERAL INFORMATION

A Overview

Except for Nursery and Cultivated Clams, the acreage report (tonnage report for raisins) is the document used to determine the AIP's liability, the insured's premium, and amount of coverage. (Refer to the Nursery and Cultivated Clam Handbooks for the document(s) used in lieu of an acreage report.) If incorrect, the acreage report may be revised if allowed under the parameters of this section.

B Possible Reasons for Revised Acreage Reports

The following circumstances may result in a revised acreage report being filed, IF by the criteria stated in PAR.'s 28 and/or 29 below, revised acreage reports are permitted.

(1) The insured may file a request for a revision on a unit basis.

(2) The AIP may file a revised acreage report to correct a keying error on the original acreage report discovered during loss adjustment, improper unit division to delete uninsurable acreage reported as insurable acreage, etc., provided the revision falls within the allowed parameters outlined in this section.

(3) Acreage Report Reviews. During Acreage Report Reviews, acreage reports must be revised to remove uninsurable acreage or may be revised to add acres not reported for a crop (except for prevented planting acres), provided liability is not increased on a unit that could not pass a crop inspection.

(4) All acreage report revisions require:

(a) Documentation in the "Remarks" section of the acreage report (or other form specified by the AIP to revise acreage reports) or on a Special Report explaining why the revision took place and what changes were made (if a form was used to document, notate "See attached (Form Number)" in the "Remarks" section of the acreage report);

(b) Date, signature, and code number of the person preparing the revised acreage report (or other form designated by the AIP to revise acreage reports);

(c) Insured's signature and date, UNLESS circumstances warrant the absence of the insured's signature. If the insured's signature is not obtained, document why the signature was not obtained in the "Remarks" or on a Special Report. Based on the nature of the revision and the reasons the insured's signature was not obtained, the AIP will determine whether the revised acreage report should be approved without the insured's signature (e.g., correcting keying error would not require the insured's signature); and

(d) For acreage reports revised after the final ARD, the AIP's authorized representative's approval. Refer to PAR. 29 A for exceptions.

28 REVISED ACREAGE REPORTS – ON OR BEFORE THE ARD

A Planted acreage. Acreage reports for a planted crop may be revised on or BEFORE the ARD anytime information that affects the guarantee, premium, or liability for the crop was incorrectly reported. No crop inspection or approval is required when revisions are filed BEFORE the ARD.

B Prevented planting acreage.

(1) The insured:

(a) Can increase reported PP acreage for the crop without the AIP's consent.

EXAMPLE: The insured has corn and soybeans insured with the same AIP and initially reports 50 corn PP acres and no soybean PP acres. The ARD for corn and soybeans is the ARD for soybeans since it is the later ARD. Prior to the ARD, the insured can (without AIP consent) revise the acreage report to increase the PP acres for corn. At this same time, the insured can add soybean PP acres without AIP consent since it is also prior to the ARD for soybeans.

(b) Cannot make other changes to the reported PP crop acreage without the AIP's consent (such as, switching reported PP acreage to another crop, or changing practices on reported PP acreage). AIP consent may only be provided when information is clearly transposed or there is adequate evidence that the AIP or someone from USDA has committed an error.

EXAMPLE: An insured initially submitted an acreage report listing 25 acres of PP wheat and later discovered that another crop would have given him or her a greater PP payment. In this case, the insured cannot change the 25 acres that were initially reported as PP wheat to another crop that would provide a greater PP payment.

(2) Refer to the Prevented Planting Handbook for examples of revised acreage reports for prevented planting acreage.

C All acreage report revisions require:

(1) Documentation in the "Remarks" section of the acreage report (or other form specified by the AIP to revise acreage reports) or on a Special Report explaining why the revision took place and what changes were made (if a form was used to document, notate "See attached (Form Number)" in the "Remarks" section of the acreage report),

(2) Date, signature, and code number of the person preparing the revised acreage report (or other form designated by the AIP to revise acreage reports),

(3) Insured's signature (or authorized representative) and date, UNLESS circumstances warrant the absence of the insured's (authorized representative) signature.

→**For CAT coverage ONLY:** Unless a person with an insurable interest in the crop objects in writing on or before the ARD and provides a signed acreage report on his or her own behalf, the operator may file/sign the acreage report for all other persons with an insurable interest in the crop, including a revised acreage report. A power of attorney is not required and all other persons with an insurable interest in the crop, and for whom the operator purports to sign for and represent, are bound by the information contained in that acreage report.←**For CAT coverage ONLY.**

If the insured's signature is not obtained, document why the signature was not obtained in the "Remarks" or on a Special Report. Based on the nature of the revision and the reasons the insured's (or authorized representative's) signature was not obtained, the AIP will determine whether the revised acreage report should be approved without the insured's (or authorized representative's) signature (e.g., correcting keying error would not require the insured's (or authorized representative's) signature; and

(4) The AIP's authorized representative's approval if acreage reports are revised after the final ARD.

29 REVISED ACREAGE REPORTS - AFTER THE ARD

A AIP Approval

(1) **Planted acreage.**

(a) Acreage reports may be revised AFTER the ARD ONLY with the AIP's authorized representative's consent (i.e., approval) as stated in the following subparagraphs.

(b) The AIP can provide consent for a revised acreage report if:

1 No cause of loss has occurred. (When insureds request revisions to reduce acres, AIPs can provide consent as stated in subparagraph B (8) below);

2 The crop unit passes the crop inspection criteria for accepting unreported acreage information; e.g., adding acreage or units, as stated in PAR. 74; or

3 A crop inspection is not needed to revise the acreage report as stated in subparagraphs B below.

(c) Acreage reported as an irrigated practice (and that qualifies for an irrigated practice at the time insurance attached) **cannot** be revised to a non-irrigated practice (even when the insured never applied any irrigation water) or vice versa WHEN loss is evident on the unit **or** WHEN harvest is general in the area, unless subparagraph A (1) (d) below or subparagraph B applies. PAR. 40 K (8) applies when acreage cannot be revised from irrigated to non-irrigated. When acreage does not qualify for an irrigated practice, PAR. 40 K (4) applies.

(d) When the insured has reported both an irrigated and non-irrigated practice and claims there is an error in the reported acreage of irrigated and/or non-irrigated practices, a revised acreage report may be approved to change a non-irrigated practice to an irrigated practice (acreage must qualify for an irrigated practice) or irrigated may be revised to a non-irrigated), PROVIDED:

1 no damage or loss has occurred,

2 harvest is not general in the area, **AND**

3 the AIP has verified that the practice for which the change was requested actually existed and is being carried out in a manner consistent with a good farming practice for the practice that the acreage is being revised.

(2) Prevented Planting. Acreage reports cannot be revised after the ARD to add PP acres, switch PP acres from one crop to another crop, add crops that were not initially reported as having PP acres, or change practices, types, or varieties for the PP crop. However, if the insured provides clear evidence that the information reported was transposed or the AIP or someone from USDA committed an error that resulted in the incorrect information, the acreage report can be revised to correct the information (e.g., if FSA transposed the number of acres they measured in a field, this was the only field the insured had in this unit, and the insured reported the FSA-determined acres as PP when reporting his/her PP acres for the unit, the acreage could be revised to the correct number of acres). AIPs will revise acreage reports to remove acreage ineligible for PP payments as stated in Section 7 I of the Prevented Planting Handbook.

B Acreage Reports May Be Revised to Add or Revise Information on a Crop Unit Without Crop Inspections for the Following Situations and a MIF and LAF is ONLY Applicable to Misreported Information on the Revised Acreage Report:

(1) Short-rated acreage (refer to subparagraph 29 C below);

(2) Measurement service requested by the date specified in 29 E below;

(3) The crop is replanted to a different type or variety than was initially reported and that is specified on the actuarial documents (e.g., initially planted oil-type sunflowers, and replanted to non-oil type), unless specified otherwise in the crop provisions or SPOIs. The same acres as were shown on the initial acreage

report would be shown on the revised acreage report, unless the insured requested that additional acreage be added, which would then require a crop inspection;

(4) Keying errors of the acreage report caused an incorrect Summary to be issued;

(5) Incorrect unit arrangement has been reported:

(a) Two or more optional/guideline units must be combined anytime separate records of production and acreage are not maintained. (Refer to Commingled Production, PAR. 126.)

(b) Part of a unit or an entire unit may be deleted.

(c) Additional units may not be created after the ARD, except for basic/policy units. Basic units are defined by the Basic Provisions; or if, applicable, the crop provisions or SPOIs. Basic units must be separated even if damage has occurred on the unit.

(6) The insured provided evidence that the agent, AIP or someone from USDA has committed an error regarding the information on the insured's acreage report. Following are some, but not limited to, items and documents from which the agent or AIP could make an error when transferring information from the document to the acreage report and which would substantiate that an error was made:

(a) Approved yield from the APH form.

(b) Information from an approved Written Agreement.

(c) Information from County Actuarial Documents; e.g., the FCI-33 actuarial map was incorrectly read resulting in an incorrect classification, etc.

(d) A document the insured claims he/she completed and submitted to his/her AIP/agent to report his/her original acreage report information. The acreage report may be revised to agree with the information on this document **provided** the AIP can substantiate that this document was on file in the agent or AIP's office on or prior to the acreage reporting date.

(e) A document the insured claims he/she completed and submitted to his/her AIP/agent to report the skip-row planting pattern for the planted crop/unit. The percent-planted factor and/or yield-conversion factor may be revised to agree with the information shown on this document, **provided** the AIP can substantiate that this document was on file in the agent or AIP's office on or prior to the acreage reporting date.

(f) The information on the acreage report is clearly transposed; e.g., 87.0 is written as 78.0., etc. Also, refer to subparagraph B (9) below for clear transposition of information between acreage report lines that are also correctable;

(7) Any other reasons specified in the policy provisions, including those shown in subparagraphs B (1), C and E.

(8) Acreage has been over reported

(a) When an insured requests a decrease in reported acres of a unit, the acreage report may be revised to remove those acres, provided:

1 At the time the insured requests a decrease in reported acreage, no cause of loss has occurred;

2 All units of the crop for which the revision is NOT requested must have existing acceptable determined acres, as defined in PAR. 80; and

3 For the unit for which the insured has requested a decrease in acres the insured must, at his/her expense have a current measurement of the unit acreage done by FSA or a disinterested firm engaged in land measurement.

(b) Document the acceptable determined and measured acreage on a form used for documentation purposes or aerial photo map.

(c) Insured's request to reduce acres is not the same as automated revisions that occur during claims processing to adjust over-reported liability. However, in both cases, the premium due is based on what actually exists (e.g., less acres actually exist than reported).

(9) Correctable **Transposition** Acreage Report Errors. When it is obvious that the acreage was inadvertently switched **between lines** at the time the insured's acreage report was completed resulting in incorrect acres between crops or practices, FSNs, types, etc., AIPs may approve a revised acreage report to correct the error. In all cases, the reason for the revision must be documented in the "Remarks Section" of the acreage report or on a Special Report. If a Special Report is used, attach it to the acreage report. The insured must sign the revised acreage report.

(a) AIPs are to use this type of correction prudently. Revisions of this type are to be approved ONLY when it is obvious that acreage reported on one line was inadvertently switched with acreage on another line, and the AIP believes that the insured did not intentionally report this way in order to benefit from doing so; i.e., lower premium because of lower premium rates, etc. The AIP should try to establish whether there is a pattern of misreporting every year. If so, the AIP should not consider the misreported acres as an inadvertent switching of acreage.

(b) This procedure is not to be used to correct overall variances between acres reported and acres determined. For example: if the irrigated practice was reported as 100.0 acres and the non-irrigated practice is reported as 150.0 acres, and it is determined that there are 95.0 irrigated acres and 155.0 non-irrigated acres, this is a variance in reporting (under reporting and over reporting) and is not considered an inadvertent switch.

(c) When the acreage report is revised to correct an inadvertent switching of acreage, the revised acreage report must be processed prior to the claim. The acreage on the revised acreage report will be used as the reported acres and cannot be used as the determined acres also. The determined acres must remain a separate determination. Example is shown below.

Example: 100 acres was initially reported as irrigated and 50 as non-irrigated; however, the acres for the two practices were inadvertently switched. The determined acres for the irrigated acreage is 51.5 acres; the revised reported acres are 50.0 acres, so there is 1.5 acres under reported for this practice. The determined acres for the non-irrigated acres are 98.0 and the revised reported acres are 100.0, so there is 2.0 acres over reported for this practice.

(d) The following can be considered correctable if the AIP believes that the insured did not switch the acreages to benefit from lower premiums, etc.:

1 Acreages for practices were inadvertently switched. For example: 100 acres were reported as irrigated and 50 as non-irrigated, however, the acres for the two practices were inadvertently switched when reported. (The inadvertent switch of acreage may occur within the same unit, or for additional coverage, it may occur between different units when there are optional units for irrigated and non-irrigated acreage.)

2 Acreages for different types were inadvertently switched. For example: 150 acres were reported as oil type (048) sunflowers and 100 acres were reported as non-oil type (049) sunflowers; however, the acres for the types were inadvertently switched when reported. The inadvertent switch may occur within the same unit, or when optional units are allowed by type for the coverage selected, the inadvertent switch may involve different units.

3 Acreage between legal descriptions was inadvertently switched. For example: Unit 00102 has 100.0 acres reported with legal description Section 2, Township 5, Range 3. Unit 00101 has 150.0 acres reported with legal description Section 1, Township 5, Range 3. The legal descriptions are correct for the unit structures shown on the APH form. However, the acreage for the legal descriptions was inadvertently switched. (The inadvertent switch may occur within the same unit; or may involve different units (for additional coverage) when optional units are allowed by sections (or other legals described in the policy). If this inadvertent switch was between the same crop that an insured has insured in two different counties, and the AIP requires separate acreage report forms be completed to report the acreage report information for the two different counties rather than reporting the information on one form, the AIP may consider this a correctable error if the criteria in (9) (a) is met.

4 When unit structure for the crop is by FSN and the acreage between two FSNs were inadvertently switched. For example, 200 acres for FSN 1234 was reported, and 300 acres for FSN 2345 was reported; however, the acreage for the FSNs was inadvertently switched.

5 Acreages between two crops were inadvertently switched. For example: one line showed 120.5 acres of corn and one line showed 155.6 acres of soybeans; however, there was actually 155.6 acres of corn and 120.5 acres of soybeans.

C Revisions to Reduce Premium for Acreage Destroyed Prior to Harvest

(1) Acreage reports CANNOT be revised after the acreage report date to remove or reduce premium because the insurable acreage was destroyed prior to harvest, except when the County Actuarial Documents provide a reduced premium rate (short-rate) for acreage destroyed prior to harvest and all other criteria is met as stated in (2) (a)–(b) below. For such crops and counties, the insured may report all planted acreage as insurable. Premium will be due on all the acreage with additional coverage.

(2) Requirements for Short-rated Acreage of Small Grain Crops When Short-Rates Are Available on the SPOIs

(a) The premium amount will be reduced (short-rated), including CAT coverage, by the amount shown on the County Actuarial Documents **only if** the insured notifies the agent by the date shown on the SPOIs that the acreage will be destroyed by grazing or mechanical means prior to harvest, and the insured does not claim an indemnity on such acreage.

(b) If a notice of damage is filed and the insured wants to file a claim for indemnity on the acreage at this time rather than take a short rate, the acreage must be appraised. Refer to PAR. 85 and 88. If the insured wishes to destroy the acreage to comply with other USDA programs, the acreage must be released when an adequate appraisal is made; or if applicable, the insured has agreed to leave representative samples so that adequate appraisals can be made at a later date.

(c) When timely and proper notification that the acreage will be destroyed is received, the AIP will revise the acreage report and reduce (short-rate) the premium accordingly. Insurance coverage will cease on any acreage the insured does not intend to harvest on the date the insured notifies the agent of such intent.

(d) In accordance with section 6 (b) (2) of the Small Grains Crop Provisions, if the acreage that is short-rated is not destroyed as intended, the insured will be subject to the under-reporting provisions contained in section 6 of the Basic Provisions (BPs), which is inclusive of section 6 (f), (g) (1), and (g) (2). (I.e., acreage short-rated and taken to harvest is considered under-reported). If part of unit acreage is short-rated and taken to harvest, the production harvested from the short-rated acreage will be counted against the remaining insured acres on the unit in accordance with section 6 (g) (1) of BPs. If the entire unit acreage is short-rated and taken to harvest, the harvested production from the short-rated unit will be allocated to the insured units in the county, in accordance with section 6 (f) of the BPs. In addition, if the harvested acreage that was reported as short-rated, results in liability being less than 90% of what the actual liability would have been for the unit, in accordance with section 6 (g) (2) of the BPs, the MIF must be applied. Such acreage cannot be added back to the acreage report, even if the crop would pass a crop inspection in accordance with PAR. 74.

An example is provided below.

Example of how the production and acres would be handled if part of the acreage in the unit is short-rated and taken to harvest:

Unit 00100 wheat = 100 insured acres initially reported. The insured timely notifies the AIP that he/she is destroying 20 of the 100 acres. The AIP short-rates the 20 acres, but the insured takes all 100 acres to harvest. The insured files a claim for unit 00100.

Production Worksheet (PW) - The PW for unit 00100 wheat is completed with 80 acres as the entry for "Final Acres" assuming that the 80 acres is the "Determined Acres" in accordance with PAR. 80. The production that was harvested from all 100 acres is counted as production to count against the 80 insured acres, even if the harvested production from the 20 acres that were short-rated was kept separate from the production harvested from the 80 acres. The insured is still subject to an MIF if the unit acres are outside of the tolerance.

APH - In accordance with the CIH, if the short-rated acreage is harvested, and the production from the short-rated acreage is **not commingled** with the insured acreage production, then the APH would include 80 acres and the production from the 80 insured acres. **However**, if the short-rated acreage production **is commingled** with the insured acreage production, the APH would include 100 acres and production from the 100 acres.

Example of how the production and acres would be handled if all the insured acreage in the unit is short-rated and taken to harvest:

Unit 00101 wheat = 100 insured acres initially reported. The insured timely notifies the AIP that he/she is destroying the acreage. The AIP short-rates the 100 acres, but the insured takes all 100 acres to harvest.
Wheat units in the county with remaining insured acres:
00102 = 50 acres
00103 = 100 acres
00104 = 25 acres.

Production Worksheet - The production harvested from the 100 acres will be allocated to any of the wheat units above that have claims. The production will be allocated and shown on the PW following the instructions in PAR. 127. None of the acres from unit 00101 will be allocated and added to the Final Acres shown on the PW.

APH - The APH will be handled as stated in PAR. 127.

(e) If the insured destroys (by grazing or mechanical means) the acreage without proper and timely notification, the acreage is considered to have been destroyed without consent. An appraisal of not less than the guarantee will be assessed on such acreage.

(3) Requirements for Short-rated Acreage for ARH Citrus:

(a) When the insured reports all planted acreage as insurable, the premium will be reduced if the insured notifies the AIP in writing of his/her intention to destroy trees on or before the date designated in the SPOIs, and does not

claim an indemnity on the acreage and the trees that are destroyed are contiguous and equals at least the lesser of 10 percent of the acreage in the unit or at least five acres.

1 No premium reduction will be allowed if the required notice is not given or if the insured claims an indemnity for the acreage.

2 Upon receiving timely notice, insurance coverage on the acreage the insured does not intend to harvest will cease and the AIP will revise the acreage report to indicate the applicable reduction in premium.

3 If the insured fails to destroy the crop as intended, the insured will be subject to the under-reporting provisions contained in section 6 of the Basic Provisions.

(b) When an insured anticipates destroying trees at acreage report time:

The insured may report all insurable planted tree acreage that he/she does not intend to destroy as insured planted acreage and report as uninsurable acreage any tree acreage that he/she intends to destroy for the crop year. No coverage will be considered to have attached to the acreage intended to be destroyed and reported as uninsurable and no premium will be due for such acreage. If the insured does not destroy such acreage, the insured will be subject to the under-reporting provisions contained in section 6 of the Basic Provisions).

D Acreage reports CANNOT be revised to add acreage of a small grain crop initially reported as uninsurable because the crop was planted for a use other than for which coverage is provided; e.g., wheat planted for the purpose of being grazed or destroyed before harvesting for grain (i.e., uninsurable acreage). When acreage of a small grain crop reported as uninsurable is harvested, the under-reporting provisions (under-reported for a reported unit or an unreported unit) in the section entitled "Report of Acreage" in the Basic Provisions apply.

E Revisions Due to Measurement Service

(1) If the insured provides documentation to the AIP that they have requested Measurement Service from FSA or a firm engaged in land measurement (see (2) below), prior to the ARD, and submits an acreage report to the AIP with estimated acres by the ARD, the insured must provide the measurement to the AIP when the Measurement Service has completed the measurements. If the measured acreage was different than the reported acreage, the acreage will be increased or decreased based on the Measurement Service's measured acres (even at loss adjustment time), unless there is a discrepancy between the acreage measurements of the Measurement Service and the AIP or FSA. However, no MIF or LAF will apply if due to irreconcilable differences, the AIP or FSA acreage measurements are used in lieu of the Measurement Service's measurements.

(2) Firms engaged in measurement service may include those operated by sales agents or firms in which the sales agent is associated. However, for claim purposes, acreage measurements performed by a measurement service operated by or in which the sales agent is associated are not considered "measured acres," but no MIF or LAF will apply as explained in PAR. 80 B (2).

(3) If the insured has not provided the acreage measurement by the time a notice of loss has been provided to the AIP, the AIP must determine the acreage and make whatever adjustments are required by the Basic Provisions if the estimated acres reported are incorrect, UNLESS the insured and the AIP agree in writing to wait for the Measurement Service's measurement. No LAF or MIF will apply.

F Preparation, Documentation, and Submission

Prepare a revised acreage report and Special Report explaining errors or omissions on the previous acreage report or summary and what corrections were made. All revised acreage reports require the items listed in PAR. 28 C. Submit the revised acreage report and Special Report to the AIP's approving official. If a crop inspection was required, refer to PAR. 74 for additional requirements.

G Liability Adjustment Factor (LAF)

(1) If the liability determined to have existed at loss adjustment time is higher (based on the liability determined from the information on the PW and APH record) than the liability reported (based on the information the insured initially reported on their acreage report and/or Production Report (APH Record), if applicable), the LAF must be applied to the replant payment, prevented planting payment, or indemnity payment calculation to hold the liability to the liability initially reported. Refer to the definition of LAF in Exhibit 1, and refer to Exhibit 18 for example of where the LAF is applied in the replant payment, prevented planting, or indemnity calculation.

(2) If the acreage report must be revised to process the practice, type, or variety determined to exist due to a different APH yield for the actual practice, type, or variety determined to have existed, or the APH has to be revised to correct the approved APH yield due to the AIP determining that the information the insured reported on his/her Production Report is different than what actually exists, the LAF based on the liability from the initial acreage report (including the incorrect APH due to the insured's misreported information on the Production Report (APH records) must still be applied to the indemnity payment calculation even though the liabilities determined to actually exist would match after the APH records and acreage report records are revised. For the purpose of determining a LAF share is excluded from liability; refer to the definition of liability in Exhibit 1.

H Misreported Information. Insureds are subject to a MIF unless the AIP is allowed or required to revise the acreage report to correct errors as stated in other subparagraphs in PAR. 29 or the insured qualifies for the exclusion of the MIF under the Measurement Service provisions, as stated in subparagraph E above. If the insured does not meet the criteria for revising the acreage report for errors or the insured does not submit acreage measurements from the Measurement Service as stated in subparagraph E above, refer to PAR. 21 D to determine if either or both of the misreporting rules apply.

I Misreported APH or Misreported Practices/Types/Variety Within the Same Unit (i.e., Not Correctable as Allowed in 29 B)

(1) If it is determined that:

(a) A practice/variety/ type) that actually existed for a unit was not a practice/variety/type reported on the acreage report for the unit (or it is

determined that information reported by the insured to determine the insured's approved APH is incorrect);

(b) There are different APH yields for each practice, variety, or type (e.g., a summerfallow practice is reported but a continuous cropping practice actually exists with each practice having a different APH yield); or the approved APH yield based on what the AIP determines actually exists is different than the initial approved APH yield (based on the information the insured reported on his/her Production Records (APH records)); AND

(c) A claim for replant payment, prevented planting payment, or indemnity payment will be processed (UNLESS (3) below applies). Prior to processing the claim, the following steps and sequence must be taken:

1 An APH record for the correct practice/type/variety (or corrected APH record, if applicable) must first be processed through the DAS,

2 A revised acreage report to change the unreported practice/type/variety information along with the applicable APH yield, guarantee, etc., determined to actually exist, UNLESS (3) below applies.

*** (2) A LAF or MIF based on the initial acreage report liability must be applied to the replant payment, prevented planting payment, or indemnity calculation, if applicable. For the purpose of determining a LAF or MIF, share is excluded from liability. Refer to PAR. 21 and the definition of liability in Exhibit 1.

(3) If the AIP has supporting evidence of the insured misrepresenting the practice/type for the purpose of obtaining lower premium or a higher guarantee, the policy should be voided in accordance with the policy provisions.

J Different Production Method Has Been Carried Out and Will Result in Lower Yield

If it is discovered that a different production method has been carried out than what was reported on the acreage report, and will likely result in a lower actual yield than was established for the production method reported:

(1) The approved yield will be reduced to an amount consistent with the production methods actually carried out for the crop year. The yield will be adjusted based on the insured's other units where such production methods were carried out or to the applicable county transitional yield for the production methods if other such units do not exist.

(2) The acreage report will be revised with the revised APH yield that matches the practice determined to actually exist; and

(3) If applicable, a LAF and MIF will be applied to the replant payment, prevented planting payment, or indemnity calculation. Refer to subparagraph G for more information about the LAF and PAR. 21 D for information about the LAF and MIF.

K Revision to Correct Uninsurable Crop Acreage Reported As Insured Acres

When it is determined that uninsurable acreage has been incorrectly reported as insured acres, the AIP must revise and process the revised acreage report to delete

such acreage from the insured acres (Insured Acres block area of the Acreage Report form) and add the uninsurable acreage to the uninsured acres (Uninsured Acres block area of the Acreage Report form). No premium is due for the uninsurable acreage. However, if both insurable insured acreage and uninsurable acreage are in the same unit, and the production from the insured and uninsurable acreage has not been kept separate, it will all be counted as production to count against the unit guarantee.

No MIF is applicable when a producer correctly reported all of the required information but the policy provisions specify that certain reported acreage is uninsurable. (For example, the producer actually had 100 acres planted and reported 100 insured acres, but some of the reported acres did not meet the policy insurability requirements; a producer actually had 100 acres that were prevented from being planted, but the producer did not have any remaining eligible pp acreage; the producer correctly and timely reported 10 land acres in an orchard and also reported the number of trees that had been removed (as required by the policy provisions) which resulted in an 18 percent reduction in the stand and thus the insured acres were reduced to 8.2 acres, etc.)

L Perennial Crop Acreage

If the AIP discovers during loss adjustment that part of the perennial crop acreage reported for the crop year had been reduced due to disease, a natural occurring weather-related event, or a man-made event that occurred prior to insurance attaching, the acreage report may have to be revised. Refer to PAR. 80 G (3) (a) 2 for further instructions.

30 REVISED ACREAGE REPORTS - ACREAGE REPORT REVIEWS

Revised acreage reports resulting from an Acreage Report Review (based on acreage determinations only) will not be prepared if the difference in premium does not exceed the FCIC approved tolerance ($250) UNLESS: (1) The AIP has given written authorization to allow revisions at a lower tolerance level, or (2) The revision is required by FCIC regulations. Refer to PAR. 73, “Acreage Report Review Inspection” for information in regards to the inspection.

31 REVISED ACREAGE REPORTS - EXAMPLES

Following are some examples of acreage report revisions that may be needed during an inspection. Always document the reason for the revision on the form used to revise acreage reports or document on a Special Report.

A Examples

(1) Insured reported units 00101 and 00102 of grain sorghum as insurable. Upon inspection unit 00102 was found to be planted to an uninsurable practice.

ACTION: Delete 00102 from the acreage report noting in the remarks that the acreage is planted to an uninsurable practice.

(2) During an inspection prior to harvest being general in the area, the AIP discovered that unit 00200 of soybeans had not been reported on the original acreage report. The crop inspection indicated that this unit and all other units met

the appraisal criteria for accepting additional liability for the additional unit, as defined in PAR. 74.

ACTION: Unit 00200 may be added.

(3) Based on the APH yield, an incorrect risk classification for unit 00100 was entered on the original acreage report.

ACTION: Revise the acreage report to show correct risk classification, and notate the reason of the revision in the "Remarks Section" or on a Special Report.

(4) The original acreage report shows 25.0 acres for unit 00100, and the inspection reveals 50.0 acres were planted. The crop inspection indicated that all the criteria for accepting additional acreage for this unit (reported and unreported acreage) were met, as defined in PAR. 74.

ACTION: The acreage report may be revised to add the additional acreage.

(5) The original acreage report shows all of unit 00100 (108.0 acres) was planted by the final planting date and there is no late planting provision for the crop, but it was determined 20.0 acres of unit 00100 were planted after the final planting date.

ACTION: Revise the acreage report to reduce the 108.0 acres of insured acreage to 88.0 insured acres. Notate in the remarks section of the acreage report that unit 00100 was revised to remove the 20 acres planted after the final planting date (complete specified area of the acreage report for uninsured acres if the acreage report has such area). Advise insured to keep harvested production from insured acreage (108.0 acres) separate from harvested production from the uninsured acreage (20.0 acres).

(6) The original acreage report shows all of unit 00100 (200 acres) was planted by the final planting date, but it was determined that 50 acres were planted 5 days after the final planting period. This is a crop that the policy provisions provide for automatic late-planted acreage coverage.

ACTION: Revise the acreage report to show 150 acres as timely planted and make a separate line entry showing the 50 acres with the correct planting date.

(7) The original acreage report shows 50 percent share for unit 00100. It is determined that the share at the time of planting was 100 percent and is still 100 percent. (No additional acreage is being added.)

ACTION: Provided a crop inspection indicates that unit 00100 acreage meets the criteria for accepting additional liability, as defined in PAR. 74, the acreage report can be revised to reflect 100 percent share.

(8) The original acreage report shows 100 percent share for unit 00101 soybeans. The inspection revealed the share at the time of planting was 50 percent.

ACTION: Revise the acreage report to reflect the appropriate share at the time of planting.

(9) The original acreage report showed unit 00100 of wheat with 100 percent share. The inspection revealed there were two units, one with 100 percent share and one with 50 percent share. Additional units must be "broken out" because they are basic/policy units.

ACTION: Revise the acreage report to show the correct unit structure.

(10) The original acreage report showed two optional units of soybeans. The inspection determined that no separate records of production or acreage were maintained to support the production report filed.

ACTION: Revise the acreage report to combine the two optional units. Delete the unit number not kept.

(11) The original acreage showed Unit 00102 soybeans with .333 share. The verification of the share revealed that the insured had no interest in this unit.

ACTION: Revise the acreage report to remove unit 00102 soybeans.

(12) The original acreage report for tobacco showed unit 00100 with risk classification of T18, but the FCI-32 listing showed the correct classification for the insured as T20.

ACTION: Revise the acreage report to show the risk classification as T20 for unit 00100 tobacco.

(13) The insured reported two units of soybeans (unit 00101 and unit 00102) on his/her acreage report. After the ARD, the insured reviewed the Summary of Coverage that was generated from the soybean acreage report and discovered that he/she had failed to report unit 00103 soybeans. The insured requests unit 00103 is added. The crop inspection to accept additional acreage (PAR. 74) reveals that the appraisal for unit 00101 and the appraisal for 00103 exceed 90 percent of the yield upon which the per-acre guarantee for each of these units is based. However, unit 00102 acreage appraises below 90 percent of the yield upon which the per-acre guarantee is based.

ACTION: The AIP must deny the request to add unit 00103 (additional acreage) since unit 00102 is considered to be in a potential loss situation as outlined in PAR. 74 D and E.

(14) The insured reports 100 planted acres on the acreage report, but only 75 acres are planted and the insured claims that 25 of the acres were actually prevented from planting. The insured claims he/she reported the 100 acres because he/she was planning to plant 100 acres, but then it started raining and the insured was unable to plant the other 25 acres, as reported.

ACTION: If it is prior to the ARD, both the planted and prevented planting acres can be revised. If it is after the ARD, the acreage report cannot be revised to add the PP acres. However, the planted acres can be revised downward, **if** at the time the revision is requested, no insured cause of loss affecting the planted acres has occurred, as stated in PAR. 29 B (8) above. Based on the preceding information: (1) If it is before the ARD, the acreage report can be revised to add the PP acres and reduce the planted acres, but no MIF will apply to a PP

payment or an indemnity payment; and (2) If it is after the ARD: (a) No PP acres can be added; and (b) If no loss has occurred, the planted acreage can be reduced without an MIF applying. However, if a loss has occurred and an indemnity payment is processed, the planted acres will be reduced during claim processing and a MIF **will** apply to the indemnity payment.

B Document Distribution and Unit Numbers to be Retained

Follow the AIP instructions for document distribution and for unit numbers to be retained when deleting a unit.

SECTION 4 UNREPORTED ACREAGE

32 UNREPORTED ACREAGE DISCOVERED AFTER ACREAGE REPORT FILED FOR THE CROP

If the insured timely filed an acreage report for a crop but did not report ALL the acreage for the crop that could have been insured, and the unreported acreage is discovered prior to harvest of the crop or prior to when harvest for the crop is general in the county, follow the procedures below: (When the insured has never filed an acreage report for the crop, refer to PAR. 21 B, Late-filed Acreage Reports.)

A AIP's Responsibilities. Inform the insured of his/her responsibility of reporting ALL insured and uninsured crop acreage in the county, and that the AIP will handle the unreported acreage in accordance with the procedure in subparagraph B and C below.

B For Acreage that Would be Insured as a Separate Unit

If such acreage AND ALL other reported unit(s) for the crop meet the requirements for accepting acreage as outlined in PAR. 74, revise the acreage report to add the unreported unit acreage that could have been insured if it had been reported timely. If such acreage OR ANY OTHER reported unit(s) for the crop DOES NOT meet the requirements for accepting acreage, the acreage report will not be revised and the harvested or appraised production from the unreported unit acreage will be prorated to all insured units if an indemnity is claimed on any unit (refer to PAR. 127).

Even though there may be damage on other reported units and the unreported unit will not be added for this reason, APPRAISE the unreported unit acreage (that could have been insured) if it has not been harvested, and it appears that it will not be harvested. This appraisal will be used if a claim is filed on any insured unit as outlined in PAR. 127.

C For Acreage that Would be Part of an Insured Unit (Under reported Acreage in a Reported Unit)

If such acreage (INCLUDING the reported acreage for that unit) meets the requirements for accepting acreage as outlined in PAR. 74, revise the acreage report to add the under reported acreage to the reported unit. If such acreage (including the reported acreage for the unit) IS NOT acceptable as outlined in PAR. 74, the guarantee will be computed on the information reported, but the production from the unreported acreage will count against the guarantee.

33 UNREPORTED ACREAGE WHICH MAY BE LATE PLANTED

A General Information

Acreage which the insured did not report or designate (even as uninsured acreage), and which the insured asserts was planted after the final planting date (or late planting date, if applicable) will be handled as follows:

B Acreage will be Considered INSURABLE (but NOT INSURED) If:

(1) The acreage is insurable under the County Actuarial Documents or by written agreement; i.e., rates and coverage are available for the acreage itself, or crop type, class, variety, or practice carried out; and

(2) The adjuster CANNOT verify to his/her satisfaction that such acreage was planted after:

(a) the final planting date for the crop shown on the SPOIs for the applicable county, or

(b) the latest allowable date under the late-planting provisions found in the applicable crop provisions, if applicable to the crop, and the acreage was not prevented from planting.

C Production to Count. When it is determined that there is **unreported insurable** acreage as part of a reported unit structure (i.e., under-reported acreage for a unit), all production from the insurable/unreported acreage will be counted against the production guarantee for that unit. (If production is commingled with another unit, the procedures for commingled production must be applied; refer to PAR. 126.) On the other hand, if the entire unreported insurable acreage could qualify as a separate unit in the same county, the production from the unreported unit acreage will be prorated to all other reported units as outlined in the procedure for unreported units (PAR. 127). If the production from an unreported unit in one county is commingled with the production from a reported unit in another county, follow the procedures in PAR. 126. Because this involves two different counties, PAR. 127 does not apply.

D Acreage will be Considered UNINSURABLE If:

(1) The acreage is NOT insurable under the policy provisions, Special Provision statements, County Actuarial Documents or by written agreement; i.e., acreage is uninsurable due to the crop being planted after the late planting period (final planting date if late planting period is not applicable) or rates and coverage are not available for the acreage itself or the crop practices, type, class, or variety or practice carried out; or

(2) The adjuster CAN verify to his/her satisfaction that the unreported acreage has been planted after the:

(a) final planting date for the crop shown on the SPOIs for the applicable county, or

(b) latest allowable date under the Late Planting Provisions found in the applicable crop provisions and the acreage was not prevented from planting

by an insurable cause of loss within the insurance period for prevented planting.

(3) When it is determined that there is **unreported uninsurable** acreage, the production from the unreported uninsurable acreage will NOT be counted against the production guarantee for the unit or any other unit; provided, the production is kept separate from the insurable acreage production. If the production from the uninsurable acreage is commingled with production from insurable acreage, the procedures for commingled production must be applied.

SECTION 5 ACTUARIAL DOCUMENTS AND VERIFICATION

34 USAGE

A General Information

The actuarial documents provide the information necessary to establish the protection available for state and county programs. There are actuarial documents for each approved county program in each state. The actuarial documents list crops alphabetically except for nursery, which lists **insurable plants** (rather than crops) alphabetically. (The SPOIs are also considered an actuarial document).

B Actuarial Documents Information. The actuarial documents are the resource for the following information on a county and state basis by crop and crop year:

(1) Crop price elections.

(2) Insurance program dates for initial and final planting, and acreage reporting.

(3) Guidelines for unit division (division of basic units) for crops with crop policies that provide for unit division.

(4) Actuarial classification of farm land, or when applicable, actuarial classification will be by individual.

(5) Premium rates for insurance protection.

(6) Types, classes, or varieties and farming practices insured.

(7) Exceptions to insured causes of damage, types, classes, varieties, or farming practices.

(8) Requirements for levels of coverage.

(9) Applicability of APH.

(10) Definition of County.

(11) Crop rotational requirements, if any.

35 ACTUARIAL CLASSIFICATION - DOCUMENT PRECEDENCE

Remember the order of precedence of actuarial document material. The most important document is listed first, the order of precedence being listed from top to bottom.

A Special Provisions of Insurance (SPOIs).

B FCI-32: Supplement (to Classification Listing).

C FCI-32: Classification List.

D FCI-33: Map Supplement.

E FCI-33: Actuarial Map.

F FCI-35 Coverage and Rates.

36 USING ACTUARIAL DOCUMENTS FOR VERIFICATION

A Information from the actuarial documents must be used during loss adjustment process to verify:

(1) That the actuarial classification recorded on the acreage report and/or Summary of Coverage is correct. Verify the insured's correct classification utilizing the actuarial classification sequence shown in PAR. 35 above.

(2) The insurability of the actual farming practices performed and types, classes, or varieties planted.

(3) That crop rotational requirements or any other special requirements set forth in the actuarial documents have been followed.

(4) That the cause of loss is not excluded for this crop or county.

(5) If there are any special statements regarding insurable varieties, types, or classes; limitations of options; practices; etc., pertaining to the crop and county being inspected.

SECTION 6 INSURABLE FARMING PRACTICES

37 GENERAL INFORMATION

The Basic Provisions, crop provisions, and SPOIs from the county actuarial documents may provide for or exclude from insurability certain farming practices. Refer to those documents for specific information. **Only for additional coverage policies:** When permitted by the policy, coverage by written agreement for unrated farming practices may be requested and approved.

A Where and How A Farming Practice Is Listed

The county actuarial documents list rates and coverages for specific farming practices, by crop. When permitted by the policy, coverage by Written Agreement for unrated farming practices may be requested from the RMA RO. For some crops, instead of a

specific farming practice, there is a practice designation of "no practice specified." This refers to established practices that are commonly used in the geographical area for the insured crop. There is a numerical code for each practice (including "no practice specified") shown on the actuarial documents. These numerical codes are used on such forms as the acreage report and/or claim form, as appropriate. If types or varieties are listed in the actuarial documents, insurable practices for each type or variety are listed. The following paragraphs in Section 6 address some of the farming practices found on the actuarial documents.

B Special farming practices, singly or in combination, determine the guarantee

(1) Verify that the insured has met all the requirements to qualify for the reported practice.

(2) If two or more requirements apply, failure to meet one requirement will disqualify the acreage.

(3) Make determinations in accordance with requirements provided in the applicable crop policy, crop endorsement, and/or County Actuarial Documents and in the following paragraphs.

C A Good Farming Practice Determination is not a determination of insurability. Acreage must meet policy requirement for insured acreage before a good farming practice determination for the insured crop can be made. Refer to PAR. 136 for more information on Good Farming Practice Determinations.

38 CONTINUOUS CROPPING PRACTICE

Definition. This distinguishes land that is continuously cropped from land that lies fallow (idle) in the prior crop year.

39 SUMMERFALLOW PRACTICE

Summerfallow (SF) is an insurable practice in some areas of the country.

A The SF practice is carried out by using mechanical tillage or chemicals on uncropped land, during the summer, to control weeds and store moisture in the soil for the growth of a later crop. To qualify for SF for the current crop year, the land must not have been planted to a crop in the preceding crop year and must lie fallow for a full crop year, except as provided in subparagraph B below.

(1) SF practices must be consistent with NRCS soil erosion control measures and recommended SF practice(s) for the area with regard to method(s), frequency, and adequacy of tillage and/or chemical control.

(2) SF Date. Termination of plant growth is required prior to the date designated for the area listed below, followed by a continuous chemical and/or mechanical weed control program. Plant growth termination dates are:

(a) May 1 in California;

(b) June 15 in North Dakota, Montana, and South Dakota; and

(c) June 1 for all other states (e.g., June 1, 2008, to qualify as SF for the 2009 crop year).

B Exceptions to SF rule

The following are exceptions to the rule that the land must not have been planted to a crop in the preceding crop year. If a crop was planted the preceding crop year (e.g., for the 2010 crop year, a crop planted in either the fall of 2008 or spring of 2009 for harvest during the 2009 crop year) and was not harvested, acreage that:

(1) Qualified for the SF practice on which the crop failed and/or was destroyed before the date specified in A (2) above of the preceding crop year, and all other SF requirements were carried out, qualifies for the SF practice for the current crop year (e.g., for 2010, a crop planted on such acreage in either the fall of 2009 or spring of 2010 qualifies for the SF practice). Such acreage put to another use with the AIP's consent and planted to a different (second) crop also qualifies for the SF practice if SF is an applicable practice.

(2) Did not qualify for the SF practice, the crop failed and/or was destroyed before the date specified in A (2) above of the preceding crop year does not qualify for the SF practice. A crop planted in the same crop year that the crop failed and/or was destroyed will NOT qualify for the SF practice. However, a crop planted on such acreage in the spring of the following crop year qualifies for the SF practice.

C Whether Representative Sample Areas Qualify for SF

Representative sample areas left for loss adjustment purposes that are destroyed within 30 days after the applicable date specified in A (2) above qualifies for the SF practice if the remainder of the field qualifies for the SF practice. However, if the representative sample areas are not destroyed within 30 days after the applicable date specified in A (2) above, the acreage left in the sample areas will be considered sub-fields and will not qualify for the SF practice.

40 IRRIGATED PRACTICE

A General Information

(1) The crop insurance contract provides that insureds are to report as irrigated, and the AIP will insure as irrigated, only the acreage for which the insured has adequate facilities and adequate water or the reasonable expectation of receiving adequate water at the time coverage begins, to carry out a good irrigation practice for the insured crop. Insureds that knew or had reason to know prior to the time insurance attached that their irrigation water supply may be reduced before coverage begins or will be reduced or cut off during the irrigation season, have no reasonable expectation of adequate irrigation water. Therefore, the insured must make decisions to plant fewer acres, plant and insure acreage for which adequate water is not available under a non- irrigated practice (if available), or report acreage as prevented planting (if prevented planting is available for the crop), provided that all prevented planting policy provisions have been met. Refer to the Prevented Planting LASH for more details regarding eligibility of a prevented planting payment under an irrigated practice.

(2) In general, for annually planted crops, insurance attaches at the time the crop is planted (except for first year applications received after planting) and on a

specified date for perennial crops. (For crops with prevented planting coverage, see the Prevented Planting LASH.) It is the insured's responsibility to provide documentation, upon the AIP's request, of the information used to determine the adequacy of irrigation water and facilities for the acreage reported for insurance under the irrigated practice.

(3) Failure of irrigation equipment or facilities due to an insured peril listed in the crop provisions is also a covered peril. If damage is due to an insured peril, the insured must make all reasonable efforts to restore the equipment or facilities to proper working order with a reasonable amount of time, unless the AIP determines it is not practical to do so. Cost will not be considered when determining whether it is practical to restore the equipment or facilities. Refer to the definitions of irrigation water supply and irrigation equipment in B (2) below.

(4) Under the terms of the policy, the burden is on the insured to show that any prevented planting or loss on annually planted (or perennial) acreage was caused by an insured cause of loss. This includes failure of the irrigation water supply. Insureds must show that such failure was caused by an insured cause of loss that occurred during the insurance period.

(5) Adjuster Verification/Documentation. AIPs must verify and document that any failure of the irrigation water supply was due to an insured cause of loss before making any prevented planting payment or paying an indemnity.

(6) **Increased Costs for Water, Electricity, Fuel, Etc.**

Increased costs for water, electricity, fuel, etc., from sources (reservoir, etc.) historically used by the insured are not considered insurable causes of loss under the policy. Any acreage for which the irrigation water supply has been reduced by the insured before insurance attached because of such increased costs is not insurable under an irrigated practice and no prevented planting payment or indemnity may be made. The insured's reduction of irrigation water after insurance attaches because of increased costs is also an uninsured cause of loss.

However, an insured would not be denied a claim if the insured did not purchase high-cost water, electricity, fuel, etc., that was available to them from sources from which the insured **does not historically purchase** these products or services. Likewise, an insured would not be denied a claim if the insured did not purchase high-dollar motors and equipment to pump the amount of water pumped in normal years when due to an insured cause of loss the water level was so low that the existing pumps could not lift the amount of water historically lifted to adequately irrigate the crop even if the pumps run 24 hours a day.

EXAMPLE OF INCREASED WATER COST:

A producer normally receives 100 units of water per year from two sources (50 units each) to irrigate 1000 acres of land for a crop or crops for which failure of the irrigation water supply due to drought is a covered cause of loss. The producer receives notice that due to reduced carryover water in the reservoir and diversion to other uses, the normal allocation is being cut by 20 units. Ten of the units cut are due to an ongoing drought and an additional ten units are being diverted by the Bureau of Reclamation to support the flow of water downstream to provide improved fish habitat. At the same time, the producer learns that the

other water sources are doubling the cost of water due to increased demand by urban users. The producer calculates that only 30 units will be purchased from this source based on the increased price.

The producer will only have 60 units of available water for the year and must allocate or reduce the acreage accordingly. Prevented planting may only be reported and claimed for that acreage associated with the ten units of water decreased due to drought. Assuming 1 unit of water irrigates 10 acres, the producer would have enough water for 600 acres and be permitted to claim prevented planting on 100 acres. The acreage associated with the 30 units of water lost due to the government diversion and increased cost is not insurable under an irrigated practice.

(7) **Electricity Buy-back Programs or Water Rights Buy-back Programs**

(a) Any reduction in the water supply due to participation in an electricity buy-back program or the sale of water under a water rights buy-back program (either before or after insurance attaches) is not considered an insurable cause of loss under the policy. However, if an insured cause of loss reduces the amount of irrigation water available, then subsequent participation in an electricity buy-back program (relative to the amount of water reduced by an insured cause of loss) will not reduce the insured loss.

(b) Insureds that elect to participate in electricity buy-back programs or water rights buy-back programs that result in a reduction of the irrigation supply before insurance attaches cannot insure any acreage affected by this reduction in the irrigation water supply as an irrigated practice or receive a prevented planting payment on an irrigated basis for such acreage.

(c) Insureds that elect to participate in electricity buy-back programs or water rights buy-back programs that result in a reduction of the irrigation supply after insurance attaches may not receive an indemnity related to the reduction in the irrigation water supply.

(d) In those cases where an insured cause of loss reduced the irrigation water supply for a portion of the insured's acreage and the insured elects to participate in the electricity buy-back programs or water rights buy-back programs, the AIP must separately determine the amount of acreage for which:

1 an insured cause reduced the irrigation water supply, and

2 participation in the electricity buy-back programs or water rights buy-back programs caused the reduced irrigation water supply. The insured may still be eligible for a prevented planting payment or indemnity, as applicable, on the acreage where an insured cause of loss reduced the irrigation water supply, provided that all other requirements in the policy have been met.

(8) **Environmental Diversions.** Decreased water allocation resulting from the diversion of water for environmental or other reasons is not an insurable cause of loss unless, the diversion is made necessary due to an insured cause of loss.

(9) **Transfer of Water Rights.** Any reduction in water due to the insured transferring their water rights; e.g., transferring water right to another entity, even if insured is involved in that entity, is not covered.

(10) **Modification of Irrigation Facilities Due to Decreased Surface Water Level.** Insureds are not expected to expend extraordinary measures or money to modify their irrigation facilities when the water level of the surface-water irrigation source (e.g., river) has decreased due to an insured cause of loss to the point that the insured cannot deliver adequate irrigation water to the crop; e.g., in order to deliver adequate water, the insured would have to place long runs of irrigation pipe not normally run, purchase additional or larger motors, lift stations, irrigation pipes, and/or other equipment not normally used in their normal irrigation operations.

B Irrigated Practice Guidelines

(1) **Purpose**

(a) AIPs are to use the "Irrigated Practice Guidelines" to administer the following standards and to verify at loss time that the insured properly reported as irrigated only the acreage for which the insured qualified for an irrigated practice. It is important to understand the meaning of various terms such as irrigation equipment and facilities, irrigation water supply, and water source that are found herein and should be reviewed before proceeding with the standards in subparagraphs C through P.

(b) In accordance with procedures in the CIH, AIPs are to provide to insureds the following guidelines to enable them to properly report annually planted or perennial acreage to be insured under the irrigated practice in order to receive maximum protection under their crop insurance contract. It is very important that these guidelines are utilized by the insured to document whether, at the time insurance attaches, that there is REASONABLE EXPECTATION of receiving adequate water to carry out a good irrigation practice for the acreage reported under the irrigated practice.

(2) **Definitions**

The following definitions are provided to facilitate a uniform understanding of the standards and guidelines for the irrigated practice.

(a) **Acreage Insurable under the Irrigated Practice** - Insurable acreage for which the insured can demonstrate, to the insurer's satisfaction, that adequate facilities and water existed, at the time insurance attached[1/], to carry out a good irrigation practice for the insured crop.

[1/]The insured is responsible for demonstrating that, at the time insurance attached, there was a REASONABLE EXPECTATION of receiving adequate water to carry out a good irrigation practice on acreage insured under the irrigated practice.

(b) **Reasonable Expectation, at the time coverage begins, of Receiving Adequate Water to Carry Out a Good Irrigation Practice** – If the insured knew or had reason to know that the insured's water may be reduced before coverage begins, no reasonable expectation exists.

(c) **Adequacy of Water** - The determination of the adequacy of water will be based upon:

1 the water available (at the time insurance attaches) from the irrigation water supply, soil moisture levels, and (as applicable) snow-pack storage levels; AND

2 supplementary precipitation which would normally be received, after insurance attaches, during the period that a good irrigation practice is normally carried out. Consideration will also be given to the factors identified in subparagraph (7) below, including the legal entitlement or rights to water.

(d) **Good Irrigation Practice** - Application of adequate water in an acceptable manner, at the proper times necessary to produce at least the yield used to establish the irrigated production guarantee or amount of insurance on the irrigated acreage planted to the insured crop.

(e) **Irrigation Water Supply** - The water source and means for supplying irrigation water, without regard to the equipment or facilities. This includes the water source AND dams, canals, ditches, pipelines, etc., which contain the water for movement from the source to the acreage and (1) are not under the control of the insured or (2) routinely deliver water to acreage in addition to that which is owned or operated by the insured. It DOES NOT INCLUDE any irrigation equipment or facilities.

(f) **Irrigation Equipment and Facilities** - The physical resources, other than water, used to regulate the flow of water from a water source to the acreage. This includes pumps, valves, sprinkler heads, and other control devices. It also includes pipes or pipelines which: (1) are under the control of the insured or (2) routinely deliver water only to acreage which is owned or operated by the insured. A center pivot system is considered irrigation equipment and facilities.

(g) **Adequacy of Irrigation Facilities** - Irrigation facilities are considered adequate if it is determined that, at the time insurance attaches, they will be available and usable at the times needed and have the capacity to timely deliver water in sufficient quantities to carry out a good irrigation practice for the acreage insured under the irrigated practice.

(h) **Water Source** - The source from which water is made available. This includes wells, lakes, reservoirs, streams, aquifers, etc.

(3) Failure of planted acreage to qualify for insurance under the irrigated practice will result in such acreage being insured under a practice other than irrigated. If no other appropriate practice is available for the acreage, insurance will not be considered to have attached on the acreage.

(4) Failure to carry out a GOOD IRRIGATION PRACTICE on acreage properly insured under the irrigated practice will result in an appraisal for uninsured causes against such acreage, unless the failure was caused by unavoidable failure (due to a specific cause of loss contained in the crop provisions) of the irrigation water supply after insurance attached, or failure or breakdown of the

irrigation equipment or facilities due to an insured cause of loss provided all reasonable efforts to restore the irrigation equipment facilities to proper working order within a reasonable amount of time were taken by the insured, unless the AIP determines it is not practical to do so. Cost will not be considered when determining whether it is practical to restore the equipment or facilities.

If a loss is evident, acreage reported as an irrigated practice that qualified as an irrigated practice at the time insurance attached cannot be revised to a non-irrigated practice after the ARD even if liability stays the same or decreases and even if the insured never applied any water. Refer to PAR. 29 A (1) (c) and (d).

(5) Insureds are to keep their production separate for acreage insured under the irrigated practice, acreage insured under a practice other than irrigated (or with no practice applicable), and uninsured acreage.

(6) Insureds are expected to be prepared to provide documentation of the factors that were considered in reporting acreage to be insured under the irrigated practice.

(7) **FACTORS TO CONSIDER IN DETERMINING ACREAGE TO BE REPORTED AND INSURED UNDER AN IRRIGATED PRACTICE INCLUDE, BUT ARE NOT LIMITED TO:**

(a) Water source history, trends, and forecasting reliability;

(b) Supplemental water supply availability and usage (including return flow);

(c) Pumping plant efficiency and capacity;

(d) Water distribution uniformity; and flexibility of the system or district;

(e) Water requirements (amount and timing) of all crops to be irrigated;

(f) Water rights (primary, secondary, urban versus agricultural use, etc.);

(g) Contingency plans available to handle water shortages;

(h) Acres to be irrigated, amount of water to be applied, and expected yield;

(i) Ownership of water (state or federal versus landowner);

(j) Use of meters and other measuring devices or methods;

(k) Soil types, soil moisture levels, and pre-plant irrigation needs;

(l) Water conserving methods, devices, and plans utilized;

(m) Past crop planting history, trends, and recommended local practices;

(n) Prudent activities and practices utilized by non-insured producers;

(o) Irrigation water supply (both quantity and quality) and facilities;

(p) Recommendations from local CES or NRCS (or other source recognized by CES or NRCS, and other source recognized by CES or NRCS to be an expert in this area) regarding irrigation and crop production; and

(q) Information the insured knew (or should have known), and when the insured knew (or should have known) such information.

(8) The AIP will use the above, and any other appropriate factors necessary to verify whether acreage was properly reported under the irrigated practice. Insureds who need assistance in determining the proper acreage to report for insurance under an irrigated practice should contact their crop insurance agent for information and assistance.

(9) Refer to the Prevented Planting Handbook for Irrigated Practice Guidelines for prevented planting coverage.

C Identify Irrigated Acres

The number of acres for which a good irrigation practice can be carried out must be identified and properly reported by the insured as early in the insurance period as possible, but no later than the published ARD.

D Provide Irrigated Practice Guidelines

AIPs are to provide a copy of the **"Irrigated Practice Guidelines"** found in subparagraph B above and in the Prevented Planting Guidelines to all insureds for whom the irrigated practice may apply. The "Irrigated Practice Guidelines" identify factors to be considered in determining the proper acreage to be reported and insured under an irrigated practice. Upon the AIP's request, insureds must document the factors they considered in reporting acreage to be insured under the irrigated practice. AIPs must verify this documentation whenever a claim for indemnity is made due to failure of the irrigation water supply, as well as anytime the accuracy of the irrigated practice reporting is suspect.

E General Irrigation Data Specific For An Area

The RMA RO Directors will compile data on water needs by crop in their region, normal precipitation figures, and other data considered appropriate to ensure uniform application of these irrigated practice standards. This task will be initiated first in those areas where irrigation problems are anticipated in the near future and/or have existed in the past.

F Regional Irrigation Assessments

(1) The RMA ROs will assist in a clearinghouse capacity for information concerning regional irrigation assessments in order to identify areas, water districts, aquifers, reservoirs, and other water sources where inadequate irrigation water is suspected.

(2) The RMA RO may initiate a regional assessment on its own if warranted and may contact AIPs as well as other appropriate sources for information concerning the availability and quality of irrigation water.

(3) The RMA RO Director will provide this information to Insurance Services. RMA will issue an Information Memorandum to publish this information to be utilized by

AIPs operating in the affected regions. Each AIP is responsible for assuring compliance with these standards.

G Areas Suspected to Have Inadequate Irrigation Water

(1) All AIPs are to notify the appropriate RMA RO immediately of any areas they suspect to have inadequate irrigation water quality or quantities, so RMA can develop, update, and distribute the information.

(2) Areas are to be identified by county, and if only a specific irrigation area or district is applicable, the identification should specify accordingly; e.g., Grant County (Nemaha Irrigation District only). Crops for which an irrigated practice is available that may be affected by suspected inadequate irrigation water should also be identified.

H National Assessment of Irrigation Supply

The Deputy Administrator for Insurance Services will coordinate a national assessment and issue further guidance if necessary.

I Random Reviews

(1) All AIPs should conduct random reviews of policies with acreage reported for insurance under an irrigated practice in areas identified in the regional assessment as having suspected irrigation water inadequacies.

(2) The reviews are to be conducted at the earliest possible time after insurance attaches. Findings of any review are to be maintained in the insured's file.

J Adequate Irrigation Water and Facilities

AIPs are to determine the adequacy of the irrigation water and facilities.

(1) The QUANTITY of irrigation water will be considered to be adequate ONLY if the insured can demonstrate to the AIP's satisfaction that, at the time insurance attached, there was a REASONABLE EXPECTATION of receiving an adequate quantity of water at the times necessary to carry out a good irrigation practice on the acreage insured under the irrigated practice. Refer to the definition of “Water Adequacy” in 40 B (2) (c) when making determinations of water adequacy.

(2) For the water quantity to be considered adequate, it also must be of sufficient QUALITY to be acceptable for irrigation purposes (e.g., water with high salt content or other yield-limiting properties may not be acceptable for irrigation or may be acceptable only if the amount used will not restrict the ability of the irrigated acreage to produce a normal crop). The local CES or NRCS should be utilized in making any necessary water quality determinations.

(3) Water quality is a characteristic of the water supply. Thus, failure of the water quality to be suitable for irrigation would be considered as failure of the water supply. However, to be insurable, such failure must be unavoidable and must occur during the insurance period (e.g., intrusion of saline water during the insurance period caused the irrigation water supply to be unsuitable for the crop). If the insured was or should have been aware of a water quality problem prior to the insurance period, the adequacy of the irrigation water at insurance

attachment is suspect and must be determined in order for the irrigated practice to apply.

K Determination and Administration Instructions. The following instructions are to be applied in determining the adequacy of the irrigation water supply and facilities, properly classifying acreage, and administering the standards.

(1) AIPs are responsible for advising insureds regarding irrigated practice requirements, and determining whether the requirements have been met.

(2) Acreage properly insured under an irrigated practice, which suffers a water shortage during the insurance period, must be managed consistent with good farming practices to produce the best possible yield under the circumstances. Insureds must take appropriate actions to seek the best possible yields by utilizing farming practices which mitigate, as much as possible, the adverse impacts of insufficient irrigation.

(3) If the insured has not followed a good irrigation practice by giving irrigation priority to uninsured acreage that results in a loss of production to the insured crop, an appraisal must be made for that uninsured loss of production. (This does not apply to prevented planting. Refer to the Prevented Planting Handbook for situations where there is failure of the irrigation water and it involves insured and uninsured acres.)

EXCEPTION: Producers may allocate life-sustaining amounts of water to their perennial crop acreage, from which crops are produced from trees, vines, or bushes, to avoid long term losses to their operations, regardless of whether or not the perennial crop acreage is insured. Forage crops (grown for seed, grazing, or production) are not included in this exception.

(4) Deny irrigated practice coverage on any acreage reported under the irrigated practice, which is not eligible for that practice.

(a) Insure such acreage at appropriate practice other than irrigated if such a practice is available and the acreage qualifies for that practice. Otherwise, the acreage is not insurable.

(b) INSUREDS ARE TO BE INSTRUCTED to keep production separate for acreage insured under the irrigated practice, acreage insured under a practice other than irrigated (or with no practice applicable), and uninsured acreage.

(5) If the acreage reported for insurance under the irrigated practice exceeds the capacity of the irrigation facilities and/or water supply reasonably expected at the time of planting (or on the calendar date for the beginning of the insurance period for perennial crops), limit (reduce) the number of acres insured under the irrigated practice to an amount which could have been adequately irrigated.

Example of reported insured acres exceeding the capacity of the irrigation facilities and/or water supply: An insured reports 100 acres under the irrigated practice. It is later determined that, at the time insurance attached, the facilities or water supplies were adequate for only 75 acres but were used on the 100 acres.)

Proceed as follows:

(a) Document the number of acres that are insurable as irrigated (75 acres, in this case).

(b) Determine, to the extent practical, the highest yielding 75 acres to be the irrigated acres, appraise any reduction in production on the 75 acres caused by applying the available water to the 100 acres, and enter the appraisal on the claim as an uninsured-cause appraisal.

(c) If only irrigated acreage is insurable in the county for the crop, prepare a revised acreage report showing 75 acres under the irrigated practice. Enter the 25 acres in the "Remarks" as uninsurable acreage due to inadequate facilities and/or water supplies.

(d) If both irrigated and non-irrigated acreage are insurable in the county for the crop, prepare any claim and/or revised acreage report in accordance with these procedures.

(e) If facts support misrepresentation of the reported practice by the insured, document the facts and handle the case under misrepresentation procedures.

(6) Diversion of Water from Insured Crops

Although it is preferred that the insured notify the AIP in advance of any diversion, failure to do so will not, in itself, result in appraisals for failure to carry out a good irrigation practice. However, advance notification allows the provider the opportunity to verify the appropriateness of such diversion at the same time that the insured makes the decision to divert the water.

This subsection is intended primarily to address the insured's actions intended or taken to divert water. There may be situations, however, in which the AIP determines that the insured should have, but did not, divert water or divert the recommended amount of water to acreage insured under the irrigated practice. In such cases it may be appropriate to assess an appraisal for uninsured causes, unless it can be documented that justifiable circumstances prevented such diversion (e.g., multiple water sources or great distances between acreage, making diversion impractical or impossible).

(a) Water Diversion within a Crop, When ALL Involved Acreage is Eligible (as stated in PAR. 40 J above) for the Irrigated Practice:

1 Verify that a water shortage exists or whether wind and extreme heat conditions have caused evaporation of the irrigation water before the water can reach all areas of the crop, thus, creating a need to irrigate only a portion of the crop that initially was being irrigated (e.g., instead of irrigating the entire pivot which is not receiving enough water to survive, irrigate only half of the crop so that at least this part will survive). Also, verify whether recommendations from local CES or NRCS (or other source recognized by CES, or NRCS to be an expert in this area) agree with the insured's intentions or actions taken.

Verification of water shortage is done by verifying the insured's water source and/or supplier (water district, etc). Verify wind and extreme heat conditions by obtaining and documenting the data from the National Weather Bureau for the closest location to the insured acreage and/or other local sources that keep records of wind and temperatures. Based on this data obtain the recommendations of local CES or NRCS as stated above.

2 Determine that such diversion is appropriate. Recommendations from local CES or NRCS (or other source recognized by CES, or NRCS to be an expert in this area) should be used to document this determination.

3 Document (on an appropriate form) the insured's intention or action taken to divert water on the affected acreage. Include the circumstances affecting your determinations required by 1 and 2 above.

4 IF the requirement in 2 above is not met, consider this as failure to carry out a good irrigation practice for the insured crop, and assess any appropriate appraisal(s) representing the additional indemnification anticipated as a result of the diversion. Use appraised and/or harvested production figures, APH yields, etc., of the acreage or units involved as a guide to establish any appropriate uninsured-cause appraisals that may be necessary to assess against the acreage or unit from which the water was diverted.

5 Inspect any acreage involved in the diversion and appraise any insured acreage that is not to be harvested.

6 Defer final settlement of claims of this type until total production on all involved acreage can be verified or determined.

(b) Water Diversion from One Crop Properly Insured Under the Irrigated Practice to Another Crop(s) Properly Insured Under the Irrigated Practice:

Document the circumstances as in (a) 3 above.

(7) Termination or reduction of production on perennial crops (tree/vine crops only) due to failure of the irrigation water supply after insurance attached: There is controversy over whether it is a recommended practice to terminate or reduce a developing perennial crop to enhance tree/vine survival. However, if an insured chooses to do so:

(a) Verify that a water shortage exists and that the local CES (or other source recognized by CES to be an expert in this area) has recommended that the insured terminate (remove) or reduce the crop on the affected acreage.

(b) Establish a zero per-acre appraisal on acreage for which the crop was completely removed as a recommended practice. If the crop is reduced, but not completely removed, the remaining production is counted in accordance with current procedures for the crop. That portion of the crop removed in accordance with recommendations from the local CES (or from other source

recognized by CES to be an expert in this area) will not be production to count in determining any indemnity or for APH purposes.

(c) Verify crop termination or reduction at final inspection.

(8) If the insured fails to carry out a good irrigation practice on acreage properly insured at the irrigated practice, assess an appraisal for uninsured causes representing:

(a) the loss of production due to failure to carry out a good irrigation practice, or

(b) not less than the guarantee for the acreage if the loss is due solely to uninsured causes.

(9) If a loss is evident, acreage reported as an irrigated practice and that qualified as an irrigated practice at the time insurance attached cannot be revised to a non-irrigated practice because the insured never applied any water. Refer to PAR. 29 A (1) (c).

L When Insureds Are Aware of Water Restrictions, Reductions, Etc.

Insureds who obtain evidence of decreased water allocation due to an insurable cause AFTER insurance begins may report losses due to failure of the irrigation water supply in accordance with the policy provisions. Refer to subparagraph A above for information regarding insurability of certain causes resulting in water reduction; e.g., environmental, increased costs, buy-back programs, etc.

Instructions regarding insureds that are advised of (or should otherwise have been aware of) water restrictions, reductions, or diversions by water districts, municipalities, or other water regulatory agencies:

(1) Annual Crops

(a) If announcement or knowledge of such restriction, reduction or diversion occurs PRIOR to insurance attachment, the insured will be expected to reduce planting accordingly, to plant other less-water-demanding crops, or to take other prudent actions necessary. However, if announcement or knowledge first occurs AFTER insurance attachment, the acreage will be considered as insurable under the irrigated practice, UNLESS information on the situation was such that the majority of producers took prudent actions necessary. In such cases, all insureds under similar circumstances will be expected to do likewise.

(b) Prevented Planting Due to Decreased Water Allocations

Carryover policyholders (those with active policies prior to the current crop year) who have evidence of decreased water allocations due to an insurable cause PRIOR TO planting may report acreage for prevented planting for crops eligible for prevented planting provisions in accordance with the prevented planting provisions in the Basic Provisions. New policyholders are eligible for prevented planting payments only if the peril insured against occurred after the sales closing date for the current year. For more information regarding prevented planting, see the Prevented Planting Handbook.

(2) Perennial Crops

Perennial crop producers seldom have the option to respond to such announcements or knowledge by reducing plantings, other than refraining from planting additional acreage and removing less productive or less desirable plantings. Producers may allocate life-sustaining amounts of water to their perennial crops (except forage crops) to avoid long-term losses to their operations, regardless of whether or not a perennial crop is insured. However, all other standards herein are to be followed to safeguard against adverse selection and other unacceptable risk exposure.

M Pre-Acceptance Inspections

Apply these irrigated practice standards to determine the adequacy of irrigation water and facilities when conducting pre-acceptance inspections that are required by current procedures. (Pre-acceptance inspections primarily affect perennial crop first-year policies and acreage increases exceeding 35 percent for a unit.) Refer to the CIH.

N Properly Identifying Cause of Loss

(1) Drought CANNOT be a Cause of Loss Under an Irrigated Practice

AIPs are responsible for ensuring that damage and losses due to failure of the irrigation water supply are properly identified as such, and are not misidentified as drought, excessive heat, hot winds, etc. The AIP MUST NOT pay drought losses on acreage insured under the irrigated practice, except where drought has caused the failure of the irrigation water supply, and in that instance, the cause of loss code must be shown as failure of the irrigation water supply, not drought.

(2) Causes of Loss Under an Irrigated Practice that Normally Do Not Occur

(a) Heat, hot winds, poor pollination, etc., may be appropriate causes of loss on acreage insured under the irrigated practice, but the likelihood of such causes are less than for non-irrigated acreage. However, under the right climatic conditions, hot dry winds may cause the amount of evaporation of irrigation water to be so great that the irrigation equipment cannot deliver the water at a fast enough rate to benefit the crop. Also, there have been instances where hot dry winds have affected the ability of a drip irrigation system to deliver water to the seed zone area or enough water to enable the water to remain long enough for the seed to germinate and/or develop an adequate root system to survive. It may be possible that similar effects are experienced with other irrigation methods.

(b) When such claims are made, the AIP must verify and document whether (If other producers with the same type of irrigation system did not experience the same problem, it may be a problem with the system rather than due to an insured cause of loss.):

1 other producers using the same type of irrigation system had the same problem; and

2 the problem can be attributed to hot dry winds in the area for the dates in question by verifying:

a what the local weather conditions and sub-soil moisture levels were for the dates in question (also see subparagraph K (6) (a) 1), and

b with agricultural experts in the area, who are knowledgeable of the irrigated practice method and irrigation equipment used, what the expected results would be utilizing the irrigated practice method and irrigation equipment under the particular conditions and soil types for the dates in question.

(3) Cause of Loss Code When Due to Insured Cause, Insured Unable to Prepare the Land for their Established Irrigation Method

(a) In some areas, it is a normal and recognized practice to prepare furrows for irrigation after the crop is planted and established. In some instances severe, prolonged drought may not allow a crop to mature to a height sufficient enough to allow furrows to be made without severe damage or destruction of the crop trying to establish the furrows. Also, in some instances severe, prolonged drought may cause some soil types to collapse when trying to make the furrows. In either instance, without the furrows, irrigation water cannot be properly distributed to all areas of the field, which may lead to loss of production. If it is determined that the severe drought was the sole reason for the furrows not being made, the resulting loss of production is covered. Confer with the local NRCS and other similar sources knowledgeable in furrow type irrigation operations to help make these determinations.

(b) The cause of loss on the claim form would be shown as “Other” with an explanation of what “Other” is in the Narrative of the claim form or on an attachment. Additionally, supporting documentation explaining why it has been determined that drought was the sole reason the furrows were not made must be shown on the claim form or on an attachment.

O Notification and/or Reminder of Irrigation Policy Provisions and These Guidelines

Agents, insureds, and adjusters are to be advised of the significance of this issue. It is recommended that documentation of any notification to insureds be placed in each insured's file, particularly in irrigation water shortage areas identified by the RMA RO.

P Center Pivot Irrigation System

Reference. For information regarding center pivot irrigation systems and the corners of the field on which there is a center pivot irrigation system, refer to PAR. 55 (Unit Structures).

41 NON-IRRIGATED PRACTICE

When the non-irrigated practice is listed as a practice on the county actuarial document, it is usually used in combination with irrigation practice (where insurance is offered on both practices) and distinguishes dry-land acreage from irrigated acreage.

42 INITIAL PLANTING PRACTICE (Intertilled Between Rows (IBR), Not Intertilled Between Rows (NIBR), etc.)

A General Information. If the insured replants the acreage to a different planting practice, the crop will continue to be insured under the practice initially planted and reported even when the crop is replanted by a practice that was uninsurable as an initial planting. This is not applicable to practices such as irrigated, non-irrigated, staked tomatoes, ground tomatoes, etc.; these practices are considered to be production practices rather than planting practices.

B Claim Instructions. If the insured files a claim for indemnity, the **planting practice** initially reported will be entered in the "practice column" on the claim form and the replanted practice will be documented in the narrative.

43 ORGANIC FARMING PRACTICE

A Insurance Coverage For Crops Grown Under an Organic Farming Practice

(1) Insurance is available for "Certified Organic" acreage and "Transitional" acreage (acreage being converted to certified organic acreage in accordance with an organic plan). (Buffer Zone acreage will be included with the certified organic or transitional acreage of which it is a part), PROVIDED:

(a) The information needed to determine a premium rate for an organic farming practice for the state, county and crop is specified on the actuarial documents, **or**

(b) An approved Written Agreement is in effect to insure the acreage being grown under an organic practice when a premium rate for an organic farming practice is **not** shown on the actuarial documents. Insurance coverage by Written Agreements is not available for Catastrophic Risk Protection (CAT), Income Protection (IP), Revenue Assurance (RA) plans of coverage, or for pilot program crops, unless permitted by the crop provisions**.**

***

(2) The "*Organic farming practice*" (as defined in the Basic Provisions) does not apply (including an insured's exemption from the National Organic Program requirement of an organic certification to sell a commodity as organic) when the insured has no organic plan in effect from a certifying agent. Therefore, the same policy terms and conditions as would apply to a producer utilizing a non-organic practice (conventional, or sustainable farming practice, if applicable) will apply in this situation, and appraisals for production lost due to uninsured causes may apply for not following the recommended weed, disease control measures, and insect control measures recommended for conventional or sustainable farming practices.

(3) The price elections or dollar amounts of insurance applicable to both certified organic and transitional acreage will be the price elections or dollar amounts of insurance published by RMA for the crop grown under conventional means for the crop for the current crop year.

(4) In addition to standard acreage reporting provisions and procedures, on the date the insured reports his/her organic acreage, the insured must have:

(a) For certified organic acreage: A written certification in effect from a certifying agent indicating the name of the entity certified, effective date of certification, certificate number, types of commodities certified (refer to 1 and 2 below), and name and address of the certifying agent (A certificate issued to a tenant may be used to qualify a landlord or other similar arrangement);

1 The National Organic Program published at 7 CFR Part 205 states in section 205.404 Granting Certification, under subsection (b): "The certifying agent must issue a certificate of organic operation which specifies the: (1) . .(2) . . (3): "Categories of organic operation, including crops, wild crops, livestock, or processed products produced by the certified operation." Subsection (c) of this same section states: "Once certified, a production or handling operation's organic certification continues in effect until surrendered by the organic operation or suspended or revoked by the certifying agent, the State organic program's governing State official, or the Administrator."

2 Therefore, "types of commodities" as stated in section 37 (c) (1) of the Basic Provisions is considered to be the categories listed in 7 CFR 205.404 (b); i.e., crops, wild crops, livestock, or processed products. To qualify for this portion of the requirements for Certified Organic coverage of insured crops as stated in the Basic Provisions, the certificate must list the name of a crop(s) (not wild crops, livestock or processed products) on the certificate. It does not have to list every crop the insured might plant. Since the certificate is not issued every year, as stated in 1 above, it is very possible that the certificate may not list every insured crop the insured may plant and insure.

EXAMPLE: A written certification was issued in 2001 and lists, corn, oats, dry beans, and wheat. The next crop year, the insured plants canola, flax, and dry peas, which are not listed on the certificate, and the organic plan has not been updated for the current crop year to show these crops. In this case, the type of organic operation is still "crops," and as long as the canola, flax, and dry peas were grown on ground that had previously been identified in the organic plan to be certified organic, then they would be insured under an organic practice, as "certified organic." On the other hand if the "Organic Certificate" listed livestock or listed the names of livestock, such as hogs, sheep, cattle, etc., then the commodity certified was not crops, it was livestock. Therefore, you cannot consider the crops (i.e., corn, dry beans, wheat, canola, flax, etc.) to be certified organic under that "Organic Certificate."

(b) For transitional acreage, a certificate as described in (a) above or written documentation from a certifying agent indicating an organic plan is in effect for the acreage. The organic plan must list the legals, crops, etc.; and

(c) Records from the certifying agent showing the location of each field and acreage maintained and **not** maintained under organic farming practices (including buffer zone acreage). This could be an organic inspection report completed by an organic inspector for the current crop year.

(5) If any acreage qualified as certified organic or transitional acreage on the date the insured reports such acreage, and such certification is subsequently suspended or revoked by the certifying agent, **or** the certifying agent no longer considers the acreage as transitional acreage for the remainder of the crop year, that acreage will remain insured under the reported practice for which it qualified at the time the acreage was reported.

(6) See the Prevented Planting Handbook in regards to any special information for crops eligible for prevented planting coverage and that are insured under an organic farming practice.

(7) Also, review responses to frequently asked questions in subparagraph D below for more information.

B Causes of Loss When Insured Under an Organic Farming Practice

All loss of production or amount of insurance due to insured causes of loss listed in the crop provisions are applicable to organic farming practice, unless specified otherwise in the SPOIs, and provided the cause of loss was not due to the insured not following a good organic farming practice. The definition for "Good Farming Practice" in Exhibit 1 also defines "good organic farming practice." Section 37 of the 2005 Basic Provisions state the following:

(1) Any loss due to failure to comply with the standards under the National Organic Program will be considered an uninsured cause of loss.

(2) Contamination by application or drift of prohibited substances onto land on which crops are grown using organic farming practices will not be an insured peril on any certified organic, transitional or buffer zone acreage.

C Loss Adjustment of Organic Farming Practices

(1) In accordance with the Basic Provisions, the insured must provide the AIP with copies of the records required in A (5) above. During the loss adjustment inspection, request these records and verify pertinent information from these records to determine insurability, practice, if applicable, whether the insured has been following good organic farming practices from any field inspection report performed by an inspector for the certifying agent, and whether acreages reported agree with the acreage shown on the certifier's records for certified acres and the organic plan approved by a certifier if the insured has only transitional acreage. Items to identify, but not limited to, are as follows:

(a) Exact field locations of certified organic, transitional, and buffer zone acreage,

(b) Exact field location of acreage not maintained under organic management (i.e., crops grown under conventional or sustainable farming practices),

(c) Rotation requirements, etc.

(2) If the insured produces the insured crop using both an organic and conventional/ sustainable farming practice, verify that separate records of acreage and production for each farming practice have been maintained.

(3) There is no additional quality adjustment for certified organic or transitional acreage. The quality adjustment procedures that apply to conventional acreage also apply to certified organic, transitional, or buffer zone acreage. Refer to the Basic Provisions and applicable crop provisions and SPOIs (if applicable) for information on quality adjustment.

(4) When a cause of loss is questionable for the organic farming practice, such as weed, disease, or insect control for organically grown production, verify with sources in the "Organic Agricultural Industry," as defined in Exhibit 1.

(5) Use separate line entries for certified organic, transitional acreage (buffer zone acreage planted to insured crop is included with the certified organic or transitional acreage of which it is a part), and also acreage grown under conventional or sustainable farming practice when insured in the same unit on the claim form.

(6) On the acreage report (except for rice), transitional acreage is identified with option code "OT" and certified organic is identified with option code "OC." Beginning with the 2006 crop year, organic rice acreage has practice codes rather than option codes. The practice code for transitional rice acreage is "712," and the practice code for certified organic rice is "702." These codes are used to determine separate premium rates and separate APH databases for transitional acreage and certified organic acreage.

(7) Revised acreage reports.

(a) If acreage was reported as organic, and: (1) there is an organic plan from a certifying agent in effect for such acreage, (2) an organic premium rate factor was NOT included in the actuarial documents for the crop and county, and (3) no written agreement was in effect to insure the organic acreage, then the acreage report must be revised to delete the acreage since it can only be insured via a written agreement.

(b) If acreage was reported with a conventional/sustainable farming practice, but: (1) such acreage had an organic plan from a certifying agent in effect, and (2) there is an organic premium rate factor on the actuarial for the crop and county, then the acreage report must be revised to show the acreage insured under the organic farming practices.

(c) If acreage was reported as organic, but: (1) An organic plan was not in effect from a certifying agent (without a plan the acreage does not meet the policy definition of "organic farming practice"), and (2) there is an organic premium rate factor on the actuarial, the acreage report must be revised to show the acreage insured under the conventional rates (conventional/sustainable farming practice) and uninsured causes may apply.

(d) All other rules for revised acreage reports apply. Refer to PART 2, Section 3 herein.

D Frequent Questions and Answers

Question 1: If an insured grows both conventional/sustainable and organic, are they required to insure both if there are organic premium rates in the county?

Answer 1: YES, it is not an option; all insurable acreage must be insured.

Question 2: Could insureds choose to insure everything under the conventional premium rates even though there are organic premium rates in the county? (Uninsured cause appraisals applied if appropriate.)

Answer 2: NO, if the acreage is grown using "organic farming practices" and under an organic plan in effect from a certifying agent, it must be insured as organic.

Question 3: Could insureds choose to insure the conventional crop under the conventional rate and decline coverage for the organic?

Answer 3: NO, it is not an option; all insurable acreage of the crop must be insured.

Question 4: Could insureds choose to decline coverage for the organic acreage if there weren't any organic premium rates in the county?

Answer 4: If organic premium rates are not on the actuarial table, and:

(1) Acreage is under an organic plan in effect from a certifying agent; such acreage would only be insured by an approved written agreement, which would provide for the organic premium rate. If a written agreement was NOT approved, the crop acreage would NOT be insured; or

(2) An organic plan was not in effect from a certifying agent for the acreage, such acreage does not meet the policy definition of “organic farming practice” and would, therefore, be insured under the conventional rates and uninsured causes may apply.

Question 5: Could insureds choose to insure everything under the conventional rate if there were no organic premium rates in the county? (Uninsured cause appraisals applied if appropriate.)

Answer 5: See answer 4 above**.**

SECTION 7 INSURABLE ACREAGE

44 VERIFYING INSURABLE ACREAGE

A The adjuster must verify that the acreage on which the crop is planted is insurable, in accordance with the policy provisions, and if applicable, the SPOIs. If uninsurable acreage is detected, notify your next level of supervision, and document on a Special Report the reason why the acreage is uninsurable.

B In accordance with the Basic Provisions (unless specified otherwise in the crop provisions or SPOIs), all acreage planted to the insured crop in which the insured has a share is insurable except acreage:

(1) That has not been planted and harvested or insured (including insured acreage that was prevented from being planted (NAP coverage is not considered insured acreage)) in at least 1 of the 3 previous crop years, unless the insured can show that:

(a) Such acreage was not planted:

1 In at least 2 of the previous 3 crop years to comply with any other USDA program;

2 Because of crop rotation, (e.g., corn, soybean, alfalfa; and the alfalfa remained for 4 years before the acreage was planted to corn again);

3 Because a perennial tree, vine, or bush crop was grown on the acreage; or

(b) The crop provisions or a Written Agreement specifically allow insurance for such acreage;

(c) Such acreage constitutes five percent or less of the insured planted acreage in the unit;

(2) That has been strip-mined, unless otherwise approved by written agreement, or unless an agricultural commodity other than a cover, hay, or forage crop (except corn silage), has been harvested from the acreage for at least 5 crop years after the strip-mined land was reclaimed.

(3) For which the actuarial documents do not provide the information necessary to determine the premium rate, unless insurance is allowed by a written agreement;

(4) On which the insured crop is damaged and it is practical to replant the insured crop, but the insured crop is not replanted;

(5) That is interplanted, unless allowed by the crop provisions;

(6) That is otherwise restricted by the crop provisions or SPOIs; or

(7) That is planted in any manner other than as specified in the policy provisions for the crop, unless a Written Agreement to such planting exists.

(8) Of a 2nd crop if the insured elects not to insure such acreage when an indemnity for a 1st insured crop may be subject to reduction in accordance with Section 15 of the Basic Provisions and the insured intends to collect an indemnity payment that is equal to 100 percent of the insurable loss for the 1st insured crop acreage. This election must be made on a 1st insured crop unit basis. For example, if the 1st insured crop unit contains 40 planted acres that may be subject to an indemnity reduction, then no 2nd crop can be insured on any of the 40 acres. Refer to Section 9 of this handbook for additional information regarding 1st insured crop, 2nd and subsequent crops.

(9) Of a crop planted following a 2nd crop or following an insured crop that is prevented from being planted after a 1st insured crop, unless it is a practice that is generally recognized by agricultural experts or the organic agricultural industry for the area to plant 3 or more crops for harvest on the same acreage in the same crop year, and additional coverage insurance provided under the authority of the FCIC Act is offered for the 3rd or subsequent crop in the same crop year. For additional information regarding 3rd or subsequent crops, see Section 9.

***

(10) Notwithstanding the provisions in subparagraph B(1)-(8) above, if the Governor of a State designated within the Prairie Pothole National Priority Area elects to make section 508(o) of the Act effective for the State, any native sod acreage greater than five acres located in a county contained within the Prairie Pothole National Priority Area that has been tilled after May 22, 2008, is not insurable for the first five crop years of planting following the date the native sod acreage is tilled.

(a) If the Governor makes this election after the insured has received an indemnity or other payment for native sod acreage, the insured will be required to repay the amount received and any premium for such acreage will be refunded to the insured.

(b) If the AIP determines the insured has tilled less than five acres of native sod a year for more than one crop year, the AIP will add all the native sod acreage tilled after May 22, 2008, and all such acreage will be ineligible for insurance for the first five crop years of planting following the date the cumulative native sod acreage tilled exceeds five acres.

C Refer to PAR. 40 about restrictions regarding irrigated acreage.

D Insurable acreage may be restricted to the amount allowed under any acreage limitation program established by the United States Department of Agriculture if USDA (RMA) notifies the AIP and in turn the AIP notifies the insured by the sales closing date.

E Acreage Under Contract With a Processor (APH CROPS ONLY)

(1) General Information

Several crop policies (crop endorsements or options, if applicable) require that a processor contract be in effect for the crop to be eligible for insurance. There are three types of processor contracts, as follows:

(a) Acreage contracts,

An acreage processor contract states the amount of acreage to be planted by the producer and that the processor agrees to purchase all production from this acreage meeting the requirements as stated in the contract.

(b) Production contracts, or

A production processor contract states a specific amount of production to be grown by the producer and that the processor agrees to purchase all production (up to the specified amount) meeting the requirements of the contract.

(c) A combination of acreage/production contracts.

An acreage/production processor contract specifies a combination of acreage and production requirements.

Most crop provisions require all processor contracts to be executed not later than the ARD for the insured crop. Refer to the individual crop provisions.

(2) Determining Insurable Acreage Under a Processor Contract

To determine insurable acreage under a processor contract, apply the following:

(a) For an acreage processor contract, specifying a minimum number of acres, maximum number of acres, or both, the insurable acreage will be:

1 Zero, if the producer plants less than the minimum acreage stated in the contract and the contract contains no provision that makes the processor liable to accept the production and the producer cannot provide documentation confirming that the processor will accept the lesser amount; or

2 The lesser of the planted acres or maximum number of acres specified in the contract.

(b) For a production processor contract, the insurable acreage will be the planted acres.

(c) For an acreage/production processor contract, apply E (2) (a) above.

(3) Total Production Guarantee on Insurable Acreage

To determine the total production guarantee, apply the lesser of the:

(a) Contracted acres multiplied by the production guarantee (per acre);

(b) Planted acres multiplied by the production guarantee (per acre);

(c) Total production stated in the contract; or

(d) For acreage/production contracts, the contracted acres multiplied by the contracted production per acre.

(4) Indemnity Payment Calculation

An indemnity payment will be made only if the total production to count for the insurable acreage falls below the Total Production Guarantee for the insurable acreage (as established above) for the respective unit.

F Examples of different situations.

The following provides questions that describe different situations with answers of whether the acreage is insurable. These situations assume that the acreage otherwise is

insurable under the terms of the crop insurance provisions and the actuarial material (e.g., there is no uninsurable land designated in the actuarial tables).

Q 1: What acreage is reported as insurable when the processor contract states that the processor will accept the production from a specific number of acres and the insured plants more than this amount?

A 1: The acreage reported as insurable will be the acreage stated in the processor contract. The remaining acreage must be reported as uninsurable. See question # 4 for instructions on processing a claim for indemnity.

Q 2: What acreage is insurable when the processor contract states a minimum or a maximum number of acres, or both?

A 2: If a minimum number of acres is specified and the insured fails to plant this amount, and the contract contains no provision that makes the processor liable to accept the production, there is no contract and thus no insurable acres. If a maximum number of acres is specified, the acreage to be reported as insurable is planted acres, not to exceed the maximum. Planted acres that exceed the maximum are to be reported as uninsurable. If both a minimum and a maximum are specified, the same rules as stated above apply. For prevented planting purposes, the minimum number of acres stated in the contract will be used if both a minimum and a maximum are specified.

Q 3: If the insured plants more acres than are stated in the processor contract and the processor is willing to accept the production from the additional acreage, can the processor amend the contract, and is the additional acreage insurable?

A 3: Unless otherwise specified in the crop provisions, the contract can be amended to add the acres prior to or on the ARD, and the additional acreage will be insurable. If the contract is amended after this date, the additional acreage may not be reported as insurable.

Q 4: How will the production to count be determined in situations when the insured plants more acreage than what is insurable under the crop provisions, and there is no way to distinguish prior to harvest what the insured acreage and what the uninsured acreage was? For example: The insured has a contract with a processor for 80 acres, but the insured plants 90 acres of the insured crop within the same field. At harvest time, the insured harvests 80 of the 90 acres. If the insured and uninsured acreage were in separate fields (same unit), this would not apply unless acreage from both fields were harvested to fulfill the 80 acres under contract.

A 4: The 10 uninsurable acres that were left unharvested will be appraised. Then the total production (harvested and appraised) from all planted acreage (whether reported as insurable or uninsurable within the unit will be divided by the number of planted acres to establish the average yield per acre. This yield per acre will then be multiplied by the insured acreage to determine the production to count for the claim and subsequently for APH purposes. This approach eliminates the need to determine which acreage is the insurable acreage (e.g., 40 acres specified in the processor contract and 45 acres planted).

Q 5: If the processor contract does not state the insured's name, is the crop considered as being under contract?

A 5: In most instances, the processor contract must contain the name or names of each individual whose production will be accepted under the processing contract. However, in some cases a person's name may not be listed on the contract even though their share of the production is considered to be under contract by the processor.

In these instances, if the AIP can verify that the production will be accepted under the processor contract, then the AIP can consider all production under this contract as insurable. Verification that the production is under contract should be documented and maintained in the insurance file.

Q 6: If the processor contract stipulates both the number of acres to be planted and the amount of production to be delivered, which unit division guidelines are effective?

A 6: Acreage insured to fulfill a processor contract which provides that the processor will accept a designated amount of production or a combination of acreage and production will not be eligible for optional units, unless specified otherwise in the crop provisions or SPOIs; e.g., Green Pea Crop Provisions state that optional units for green peas may be established based on shell type and pod type. If the AIP verifies that the processor will take all of the production from the listed acres in the processor contract, the insured acreage would be eligible for optional units.

Q 7: If a producer contracts with more than one processor and plants the crop in one or more fields, how does the AIP know what acreage is covered by which processor contract?

A 7: The producer must designate on the acreage report on or before the ARD, what acreage is under which contract (i.e., the 10 acres in the south part of the field is covered under processor A, the 15 acres in the middle of the field is covered under processor C).

Q 8: What acreage is insurable when the contract contains both an acreage and production figure and the AIP verifies that the processor will take all of the production from the listed acres in the processor contract; particularly if harvested production exceeds the production figure listed in the contract?

A 8: All acreage specified in the contract will be insurable.

Q 9: What if the processor contract allows for an acreage tolerance of XX%? Is the insurable acreage still the stated acreage figure on the contract, or can it be increased not to exceed the acreage percentage tolerance?

A 9: The insurable acreage would be up to the amount stated with the tolerance applied. For example, if the stated acres were 100 acres with a tolerance of 5%, then the insurable acres could be up to 105 acres.

Q10: If the insured physically plants and reports (as insurable acres) more acres than are under contract (contract covers three different units), will the MIF and LAF apply? For example, the insured has a contract with a processor for 160 acres across three units, but the insured has actually planted 166 acres in the three

units. There is no way to distinguish prior to harvest what the insured and uninsured acreage for each of these three units will be. (The insured has no way of knowing what acres the processor will bypass. If the insured tries to guess which 6 acres the processor will bypass, it could mean the insured will have a MIF or LAF applied if the insured guessed wrong.)

A 10: If the insured reports 166 acres as insurable among the three units, and 6 of those acres are bypassed because there is only 160 acres under contract, those 6 acres will be considered uninsurable and will be removed from the respective units on which the acreage was actually bypassed. Therefore, if any of the three units are going to be taken to harvest, claims cannot be finalized for any of the three units until harvest is complete. When part of the over-reported acreage within a field is bypassed, production to count for that field is determined as stated in A&Q 4. If all three units have claims based on unharvested acreage, then: (1) The entire acreage in each unit will be appraised to determine the per-acre appraisal for each unit; and (2) The 6 uninsurable acres will be removed across the three units in proportion to the acres in each unit. No MIF or LAF will apply since the acreage is uninsurable, just as any acreage physically planted that the AIP determines is uninsurable would be removed and no MIF or LAF applied (e.g., uninsurable because the acreage didn't meet rotation requirements, etc.).

SECTION 8 INSURED CROP

45 VERIFYING INSURED CROP

A <u>Loss Adjustment Verification</u>

(1) Verify whether the crop is insured in accordance with the policy as stated in B below.

(2) When the adaptability of the seed or plant type/variety to the area is questionable (e.g., varieties not commonly produced in the area), consult with agricultural experts or organic agricultural industry, as applicable. Refer to Exhibit 1 for definition of "Agricultural expert" to determine who constitutes agricultural experts. Document your findings.

(3) If it is determined that the crop or part of the crop acreage is not insurable, the acreage report must be revised to show such acreage as uninsurable acreage.

B <u>The Basic Provisions state the following:</u>

(1) The insured crop will be that shown on your accepted application and as specified in the Crop Provisions or SPOIs and must be grown on insurable acreage.

(2) A crop which will NOT be insured will include, but will not be limited to, any crop:

(a) That is not grown on planted acreage (except for the purposes of prevented planting coverage), or that is a type, class, or variety; or where the conditions under which the crop is planted are not generally recognized for the area (For example, where agricultural experts

determine that planting a non-irrigated corn crop after a failed small grain crop on the same acreage in the same crop year is not appropriate for the area.);

(b) For which the information necessary for insurance (price election, premium rate, etc.) is not included on the actuarial documents, unless such information is provided by a written agreement;

(c) That is a volunteer crop;

(d) Planted following the same crop (insured or not insured) on the same acreage and the first planting of the crop has been harvested in the same crop year unless specifically permitted by the Crop Provisions or the SPOIs;

(e) That is planted for the development or production of hybrid seed or for experimental purposes, unless permitted by the Crop Provisions or by written agreement to insure such crop (If experimental seed is planted, it would be considered planted for experimental purposes.); or

(f) That is used solely for wildlife protection or management. If the lease states that specific acreage must remain unharvested, only that acreage is uninsurable. If the lease specifies that a percentage of the crop must be left unharvested, the insured's share will be reduced by such percentage.

EXAMPLE 1: The insured farms 100 acres and has 100 percent share. The lease specifies that 10 acres will be left unharvested for wildlife, but the location of the 10 acres is not specified in the lease and is not specified on the acreage report. In this situation the insurable acres is 100 acres at 90 percent share.

EXAMPLE 2: The insured farms 100 acres and has 100 percent share. The lease does not specify the location of the 10 acres that will be left unharvested for wildlife but the insured specifies on the acreage report the specific location of the 10 acres in the field(s) that will be left for wildlife and reports these as uninsured acres. In this situation, the insurable share is 100 percent on 90 acres.

EXAMPLE 3: The insured farms 100 acres and has 100 percent share. The lease specifies the exact location in the field(s) the 10 acres will be left unharvested for wildlife. The remaining 90 acres are the insured acres and the insurable interest is 100 percent. If the insured did not report this correctly on the acreage report, the acreage report is to be revised to reflect the correct acres and share of these acres.

(g) Although certain policy documents may state that a crop type, class, variety, or practice is not insurable, it does not mean all other crop types, classes, varieties, or practices are insurable. To be insurable, the crop type, class, variety, or practice must meet all the conditions as stated in A above.

C The Crop Provisions or SPOIs

The applicable crop provisions or SPOIs for the applicable crop and county may have additional reasons why the crop would not be insured.

SECTION 9 FIRST (1st), SECOND (2nd), AND SUBSEQUENT CROPS PLANTED ON SAME ACREAGE IN THE SAME CROP YEAR

In accordance with the Agricultural Risk Protection Act of 2000, Section 508a of the Federal Crop Insurance Act was amended and subsequently the Basic Provisions were amended to limit indemnity payments on the same acreage in the same crop year, except as allowed for acreage that qualifies for double-cropped acreage, as defined in the Basic Provisions.

The following definition applies ONLY to PAR.'s 46-52 as they relate to first/insured crop acreage:

Insurable loss: For the purpose of determining whether payment reductions will apply to first insured crop acreage, an insurable loss is considered to have occurred for a second crop when the insured accepts an indemnity payment on the second crop.

46 FIRST (1st) INSURED CROP PLANTED AND SECOND (2nd) CROP

If there is an insurable loss on the 1st insured crop acreage in the unit and an indemnity is due on the 1st crop unit, except in the case of double cropping as stated in PAR. 49 below, the following applies:

A General Information

(1) A 2nd crop does not include replanting of 1st crop acreage to the same 1st crop, except as stated in PAR. 65 D or G.

(2) Forage production and other insured perennial crops are considered a 1st insured crop. Although forage and other perennial crops may not be planted each year, they are the 1st insured crop.

(3) If an insured plants and insures skip-row cotton, it fails, and grain sorghum is planted in the rows that were not planted to cotton, the grain sorghum is still considered the 2nd crop for this acreage.

(4) The 1st insured/2nd crop rules apply to certified seed potatoes and malting barley the same as they do to other crops such as regular potatoes and feed barley.

(5) AIPs should make insureds aware that an insured's election not to insure acreage of a second crop may affect any linkage requirement for FSA program participation. Disaster payments are administered by FSA and they will determine the impact of not insuring a second crop. GRP, AGR, and AGR-Lite are acceptable for meeting any linkage requirements.

(6) When a policyholder elects to not insure second crop acreage, the acreage and production from such acreage is not included for APH purposes for subsequent years except when it is commingled with production from insured acreage. Refer to the CIH for procedures regarding commingled production.

(7) AIPs do not have the option of denying the additional first insured crop indemnity when no indemnity is paid for second crop acreage if all policy provisions are met. AIPs should handle late notices of loss in accordance with current policy and procedures.

(8) Some AIPs have developed forms that allow the insured to elect to not plant an insured 2nd crop, plant an insured 2nd crop but not insure 2nd crop acreage, or plant an insured 2nd crop and waive the indemnity on the 2nd crop if the 1st crop indemnity is greater than the 2nd crop indemnity but if it is not, then the indemnity for the 2nd crop will not be waived.

B Insured's Options

(1) **Not plant a 2nd crop** on the same acreage for harvest in the same crop year and receive 100 percent of indemnity due for the 1st insured crop acreage.

(2) **Plant but not insure a 2nd crop** planted on the same acreage as the 1st insured crop was planted for harvest in the same crop year**.** For this situation, the following applies:

(a) This decision is on a 1st insured crop unit basis. If the insured has multiple units of the 1st insured crop, the election to insure 2nd crop acreage is made separately for each of the 1st insured crop units and applies to ALL 2nd crop acreage in the unit, unless double-cropping provisions apply in which case, the 2nd crop acreage meeting the double-cropping-history requirements must be insured.

For example: Insured's Unit 00201 corn = 150 acres of 1st insured crop corn, 50 of which suffers an early loss and is released. Insured plans to plant 2nd crop on acreage. Unit 00301 soybeans = 250 acres of planted soybeans consisting of 200 1st insured crop acres and 50 2nd crop acres (same 50 acres that corn was planted on in unit 00201). The insured timely elects to **not insure the 50 acres of 2nd crop acreage in unit 00301 soybeans**. Insured's Corn Unit 00202 = 175 acres of 1st-insured crop corn, 20 of which suffers an early loss. Unit 00302 soybeans = 250 acres of planted soybeans consisting of 230 1st crop acres and 20 of 2nd crop acres (same 20 acres that corn was planted on in corn unit 00202). However, the insured timely **elects to insure the 20 acres of 2nd crop acreage in unit 00302 soybeans**.

(b) Insured's must make their election to not insure 2nd crop acreage by the following deadline:

1 If the 1st insured crop is insured under the Common Crop Insurance Policy Basic Provisions, at the time the 1st insured crop acreage is released (if no acreage is released, on the earlier of the ARD for the 2nd crop or when claim is signed for the 1st insured crop);

2 If the 1st insured crop and the 2nd crop are both insured under the GRP or GRP/GRIP Basic Provisions, on the ARD for the 2nd crop; or

3 If the 1st insured crop is insured under the GRP Basic Provisions and the 2nd crop is insured under the Common Crop Insurance Policy Basic Provisions, before the 2nd crop is planted.

(c) The insured will collect 100 percent of indemnity due for the 1st insured crop acreage, provided:

1 **Written notice** [1/] **is provided**, **signed, and dated** by the insured to the AIP stating that the insured elects not to insure acreage of a 2nd crop by the deadline for the specific situation stated in subparagraphs B (2) (b) 1, 2, or 3 above.

[1/] A Written Notice can be considered a statement on: (1) the Production Worksheet (PW), (2) an attachment to the PW (e.g., Special Report), or (3) a form developed by the AIP for this purpose that states the insured elects to not insure the 2nd crop.

2 If the insured fails to provide notice of his or her election to not insure 2nd crop acreage by the deadline for the specific situation stated in subparagraphs B (2) (b) 1, 2, or 3 above, the 2nd crop acreage will be insured in accordance with policy provisions (the same as (3) below), and the insured must repay any overpaid indemnity for the 1st insured crop.

a If the insured had control of the land (owns or leases the land for the entire crop year) and timely elected in writing **not to** insure any 2nd crop acreage, but subsequently plants and reports 2nd crop acreage as insured crop acreage, the acreage report must be revised to remove the 2nd crop acreage as insurable acreage and show such acreage as uninsured acreage on the acreage report. This is because the insured had previously elected not to insure the 2nd -crop acreage.

b On the other hand, if insured A has elected in writing that a 2nd crop will not be insured on the same acreage as the 1st insured crop was planted, but insured A does not own or have control of the land and someone else (insured B) plants an insured crop (2nd crop) on that same acreage and insured B receives an indemnity on the unit in which the 1st insured-crop acreage was planted and the second crop acreage contributed to the losses on the units for both the 1st insured crop and the 2nd crop, insured A will be limited to 35% indemnity on the 1st crop acreage. This is because a 2nd crop was planted on the 1st crop acreage on which insured B collected an indemnity.

(d) The insured must report in the area for uninsurable acreage on the applicable acreage report, the 2nd crop acreage planted on 1st insured-crop acreage (within the same crop year) that will not be insured as uninsurable acreage.

(3) **Plant and insure the 2nd crop** on the same acreage (as the 1st insured crop was planted) for harvest in the same crop year. For this situation, the following applies:

(a) If the 2nd crop acreage is planted and insured with a different AIP, the insured must provide written notice to each AIP that a 2nd crop was planted on acreage on which the insured had a 1st insured crop.

(b) If there is an insurable loss on the 2nd crop acreage and the insured has not waived the indemnity for the 2nd crop acreage, the insured will:

1 Receive 100 percent of the indemnity due for the 2nd crop acreage. The insured will pay the full premium (producer-paid premium) for the 2nd crop acreage. Subsequent crops planted on the same acreage within the same crop year will not affect the indemnity of the 2nd crop acreage;

2 Collect an indemnity payment that is 35 percent of the insurable loss for the 1st insured-crop acreage;

3 Owe 35% of the premium (producer-paid premium) for the 1st insured-crop acreage having a 2nd crop planted on it.

(c) If the insured's option was to plant 2nd insured crop acreage but: (1) no crop is planted, (2) the acreage is planted to a crop not insured, or (3) the insured 2nd crop acreage does not suffer an insurable loss:

1 The insured should request to receive the remainder (65 percent) of the 1st insured-crop indemnity that was not previously paid. However, if the insured does not request such payment, the AIP should contact the insured for follow-up to determine the status of any 2nd crop. For most situations, this should be done on or before the billing date for the 1st insured crop.

2 If the insured certifies there is no 2nd crop loss on the same acreage on the 1st insured-crop unit, or the AIP otherwise verifies there is no 2nd crop loss, then the remainder (65 percent) of the 1st insured-crop indemnity must be paid to the insured, and if the entire premium is not offset by the indemnity, a bill for the remaining premium is sent. Payment of the indemnity should be made in accordance with the 30-day provisions in the policy, unless the AIP is unable to verify whether an insured loss occurred to the 2nd crop. It is the insured's responsibility to provide sufficient documentation to the AIP.

3 The insured does not have the option to avoid payment of the additional premium for the 1st insured crop by refusing the remaining 65 percent of the indemnity owed for the 1st insured crop.

4 AIPs may make payment of the additional indemnity for the 1st insured crop before announcement of the harvest price for revenue plans of insurance, or they may choose to wait until after the announcement to avoid making two additional payments.

(d) If the 2nd crop acreage planted is insured and has an insurable loss:

1 The AIP must perform loss adjustment on the 2nd crop (after receiving notice) unit, and give the insured the option to accept or reject the 2nd crop indemnity. It is possible for the insured to decline any 2nd crop loss indemnity without the AIP conducting loss adjustment. If the 2nd crop is insured with a different AIP, the AIP for the 1st insured crop may use claim documents from the other AIP to show there was a loss

for the 2nd crop acreage. It is the insured's responsibility to obtain copies of such documentation and provide it to the AIP for the 1st insured crop.

2 The insured may elect not to accept the 2nd crop indemnity payment up until the time they would cash the 2nd crop indemnity payment check, if one was issued.

3 AIPs may elect whether or not the adjuster will calculate indemnity payments for policyholders to assist them in determining whether to accept the additional 65% first crop indemnity (less 65% premium), or accept the 2nd crop indemnity.

4 And the insured waives the indemnity or does not cash the indemnity check for the 2nd crop acreage, the insured will:

a Collect an indemnity payment for the other 65 percent of insurable loss that was not previously paid for the 1st insured crop; and

b Be responsible for paying the remainder of the premium for the first insured crop.

5 If an insured waives the 2nd crop indemnity, AIPs shall use normal procedures to show claim closure with an indemnity due but waived by the insured. The indemnity waiver is based on the unit structure for each individual 1st crop unit. Second crop indemnities must be waived on a first insured crop unit basis (for all second crop acreage on the same acreage where the first insured crop unit was located) except where double cropping history is applicable to a portion of the acreage in the unit, in which case the insured can accept the loss payment for acreage eligible for the double-cropping exemption and reject the loss on acreage not eligible for the exemption.

EXAMPLE 1: If there is one second crop unit located where there was one first insured crop unit:

Unit 00100 Corn	1st insured crop acreage	250 acres
Unit 00300 Soybeans	2nd insured crop acreage	250 acres

In this case the insured waives the indemnity for the 2nd crop acreage (unit 00300 soybeans). Because the 2nd crop acreage (unit 00300 soybeans) is located where the 1st insured crop acreage was planted, the insured is preserving ALL of the 1st insured crop acreage indemnity for unit 00100.

EXAMPLE 2: If there are two second crop units located where there was one first insured crop unit:

Unit 00100 Corn	1st insured crop acreage	250 acres
Unit 00301 Soybeans	2nd insured crop acreage	100 acres
Unit 00302 Soybeans	2nd insured crop acreage	150 acres

In this case, if the insured wants to waive insurance on the 2nd crop acreage, the insured must waive the indemnity for BOTH units (00301 soybeans and 00302 soybeans) in order to preserve the indemnity for the 1st insured crop acreage. This is because there are two units (00301 and 00302) of the 2nd crop located where there was one first insured crop unit.

EXAMPLE 3: If there is one second crop unit located where there are two first insured crop units.

Unit 00101 Corn	1st insured crop acreage	100 acres
Unit 00102 Corn	1st insured crop acreage	100 acres
Unit 00200 Soybeans	2nd insured crop acreage	200 acres

In this case, the insured may waive indemnity on the 100 acres of the 2nd insured crop acreage where unit 00101 1st insured crop acreage was located to preserve the 1st insured crop indemnity on unit 00101, but not waive the 100 acres of the second crop acreage located where the 1st insured crop unit 00102 corn was located or vice versa rather than waiving all of the 2nd crop acreage where the first insured crop acreage for corn units 00101 and unit 00102 were located. This is because the insured is electing to waive the 2nd crop acreage indemnity based on the individual 1st insured crop unit.

(e) Separate records of production

1 If the 1st insured crop suffers a loss, the insured must provide separate records of production for all insured crops planted on the same acreage as the 1st insured crop. Those records acceptable for loss adjustment purposes are acceptable as documentation for separate production from acreage that is and is not planted to a 2nd crop.

EXAMPLE: The insured has an insurable loss on 100 acres of wheat and subsequently plants cotton on 10 acres of that wheat acreage. The insured must provide records of the wheat **and** cotton production on those 10 acres separate from any other wheat and cotton production that may be planted in the same unit.

2 If the insured fails to provide separate records, the production of each crop will be allocated to the acreage in proportion to the liability of the acreage.

C Possible Impacts on Companion Contracts

Situations may exist where different policyholders sharing an insurable interest on the same acreage might be such that one entity could have a greater loss amount on the 1st

insured-crop acreage, but the other entity has a greater loss amount on the insured second crop acreage. Different levels of coverage, different APHs, or different insurance plans, etc., between landlords, tenants or other sharing parties may cause this situation to occur. The following scenarios illustrate this.

Scenario 1: Both the landlord and the tenant have insurance policies in effect for both the 1st insured and 2nd crops and neither qualify for double-crop exemption. One insured has CAT level of coverage, while the other has additional coverage.
Landlord/Tenant

LANDLORD 1st INSURED CROP		**TENANT 1st INSURED CROP**		
CAT Policy	No Loss	Buy-up Policy	$10,000 Loss	35% = $3,500
LANDLORD INSURED 2nd CROP		**TENANT INSURED 2nd CROP**		
Buy-up Policy	$10,000 Loss	CAT Policy	No Loss	

The landlord did not have a 1st insured crop loss. Therefore, the landlord would not have the option to decline insurance on the 2nd crop. Even though the tenant did not have an insured 2nd crop loss, the landlord did. The tenant would be restricted to $3,500 (35% of the 1st insured crop loss) if the landlord accepted the $10,000 2nd crop indemnity.

Scenario 2:

LANDLORD FIRST 1st CROP			**TENANT FIRST 1st CROP**		
CAT Policy	$500 Loss	35% = $175	Buy-up Policy	$10,000 Loss	35% = $3,500
LANDLORD INSURED 2nd CROP			**TENANT INSURED 2nd CROP**		
Buy-up Policy	$10,000 Loss		CAT Policy	$500 Loss	

The landlord and tenant will each receive at least 35% of their insured share of any 1st insured crop loss. Each would have the option to waive insurance on the 2nd crop acreage. Prior to knowing the outcome of the 2nd crop, each may have been given the opportunity to request the AIP to calculate and then pay the greatest possible indemnity for both crops as allowed by the policy provisions (refer to item A (8) above). In certain situations, this may mean waiving a 2nd crop indemnity in order to be eligible for the remaining 65% 1st insured crop indemnity. However, once any entity is indemnified for an insured 2nd crop loss on the same acreage, all entities with an insurable interest in the 1st insured crop will be limited to 35% of their insured share of any payable loss. PRECEDENCE IS BASED ON WHETHER ANY INSURED ACCEPTS A 2nd CROP INDEMNITY. If the landlord is indemnified ($10,000) for their 2nd crop loss, the greatest possible indemnity allowed by the policy provisions for the tenant from both crops would be $4,000 ($3,500 which is 35% of their insured share of the 1st insured crop loss plus $500 from the 2nd crop).

Thirty-five percent (35%) of any 1st insured crop indemnity plus any insured 2nd crop indemnity IS the greatest possible indemnity outcome allowed by the policy provisions for all insured entities sharing in the 1st insured crop if ANY entity accepts an indemnity on the 2nd crop acreage.

47 FIRST (1st) INSURED CROP PREVENTED FROM PLANTING AND SECOND (2nd) CROP

Refer to the PP Handbook for additional 1st insured /2nd crop information relating specifically to PP claims.

48 ADDITIONAL INFORMATION ABOUT REDUCTION OF PAYMENTS AND PREMIUM DUE TO 2nd CROP

Except in the case of double cropping as described in PAR. 49 below, the following applies:

A Another Person Plants Second Crop Acreage

(1) Even if another person plants a 2nd crop on acreage where the **1st insured crop was planted and suffered a loss and the 2nd crop is insured and suffers an insurable loss,** the indemnity payment for the 1st insured crop acreage will be 35% of the indemnity due for the 1st insured crop acreage.

For example: Insured AA plants 2005 corn and receives an indemnity. Insured AA then cash rents this acreage to Insured ZZ who plants insured soybeans on this same acreage. Insured AA must notify his/her AIP and must notify Insured ZZ's AIP that a 2nd crop was planted on acreage on which he/she (Insured AA) had a 1st insured crop.

(2) If the 1st insured crop is planted, is shared with another person or other people, and the crop suffers a loss, each of the shareholders can decide whether they want to insure a 2nd crop that is planted on the same acreage independently of each other. However, if the 2nd crop suffers a loss and the person or any one of the people who chose to insure the 2nd crop accepts their indemnity check, the 1st insured crop indemnity will be limited to 35% for all shareholders.

(3) If the **1st insured crop acreage was planted acreage** and the 2nd crop acreage does not suffer a loss or is not insured, 100% of indemnity of the 1st insured crop acreage will be applicable.

(4) For prevented planting, refer to the Prevented Planting Handbook.

B First (1st) insured crop acreage that is cash rented by another person who plants a crop on this acreage

(1) Cash rent, as used in PAR. 48 means cash renting for agricultural use (growing a crop, haying, grazing, etc.) This does not apply when the acreage is cash rented for a non-agricultural use; e.g., hunting**.**

(2) The crop that is planted by the person cash renting the acreage is considered the 2nd crop for both the person having the 1st insured crop, and is also considered the 2nd crop for the person that cash rented the acreage and planted a crop on this acreage.

(3) Another person planting the 2nd crop cannot choose not to insure the acreage if the 2nd crop is an insurable crop and that person has an active policy for this crop in the county. This is because **only** the insured that had the 1st crop indemnity may elect to not insure any 2nd crop acreage to preserve 100% of his/her 1st crop indemnity.

49 INDEMNITY PAYMENT AND PP PAYMENT AS THEY RELATE TO DOUBLE-CROPPING HISTORY

A Receive a full Indemnity Payment or PP Payment on the 1st Insured Crop When these Conditions Exist

When one of the following conditions exists, the insured may receive a full indemnity payment or PP payment on the 1st insured crop IF ALL of double cropping qualifications are met, as stated in section B below:

(1) The 1st insured crop is planted, suffers a loss, and an indemnity is due. Then in the same crop year, a 2nd insured crop is planted (on the same acreage as the 1st insured crop) suffers a loss, and an indemnity is paid to the insured;

(2) The 1st insured crop was PP and the 2nd crop is planted on the same acreage in the same crop year, regardless of whether or not the 2nd crop is insured or sustains an insurable loss;

(3) The 1st insured crop was PP and the subsequent insured crop is PP on the same acreage in the same crop year (cannot call the subsequent PP crop a 2nd crop since it is not a planted crop; refer to definition of "Second Crop");

(4) The 1st insured crop is planted and the subsequent insured crop is PP on the same acreage in the same crop year (cannot call the subsequent PP crop a 2nd crop since it is not a planted crop; refer to definition of "Second Crop"); or

(5) The 1st planted crop for the crop year is uninsured but insurance is available for the uninsured crop (refer to footnote in B (2) below) and a subsequent insured crop is PP on the same acreage in the same crop year (the subsequent PP crop is the 1st insured crop).

B Double Cropping Criteria

IF all of the following conditions are met, the insured qualifies for double cropping history:

(1) It is a practice that is generally recognized by agricultural experts or the organic agricultural industry in the area to plant the second crop for harvest following harvest of the **1st insured crop**;

(2) Additional coverage insurance offered under the authority of the Act is available [1/] in the county for two or more crops that are double cropped;

(a) The insured is not required to have additional coverage to qualify for double-cropping.

(b) The two crops claimed as qualifying double-cropped acreage for the current crop year, must both be "insurable" in the current crop year in order to qualify as double-cropped acreage (i.e., insurance offered under the authorization of the ACT is AVAILABLE in the county for both crops.);

[1/] Available means that a Federal crop insurance program is offered for the insured crop in the county by either having: (1) actuarial documents on file for the crop in the county (crop not required to be insured), or (2) if no actuarial documents are on file for the crop in the county, the crop is insured via a written agreement.

EXAMPLE: Wheat planted for harvest as grain would have insurance available under the ACT, but wheat planted for haying purposes would not. For the purpose of determining double-crop history, both crops do not have to have been insurable or insured in prior years; e.g., for the current crop year, the 1st insured crop is wheat, and the 2nd crop is soybeans. Prior year records show wheat is followed by carrots in at least two of the last four crop years. If soybeans are planted on the PP wheat acres, the PP wheat acreage qualifies for double-cropping (entitled to 100% PP payment) due to the fact that there was double-cropping history for carrots, which is not a crop for which insurance is available.

(3) The insured provides records as stated in (a) or (b); and

(a) **His/her own records** acceptable to the AIP of acreage and production that show the insured has double-cropped acreage in at least two of the last four crop years in which the **1st insured crop** was planted somewhere in the county for which the claim is being made, OR

1 If an insured crop is planted prior to the PP crop, then the double-cropping history must be determined based on the 1st insured crop, not the subsequent PP crop.

2 If the 1st insured crop is the subsequent crop planted on the same acreage in the same crop year as the uninsured crop, the double crop records are based on the subsequent crop (1st insured crop). Refer to examples in D below.

3 Refer to C below for what constitutes acceptable records and the examples in D below regarding the insured's own records of double-cropping. When the double-cropping history requirements have been based on the insured's own records, the double cropping exemption may be used anywhere in the county.

(b) **Someone else's records** acceptable to the AIP of acreage and production that show the exact same acreage in the county on which the claim is being made for the 1st insured crop was actually double cropped in at least two of the last four crop years in which the **1st insured crop** was grown by someone else, and the insured has acquired this exact same acreage.

1 If an insured crop is planted prior to the PP crop, then the double-cropping history must be determined based on the 1st insured crop, not the subsequent PP crop.

2 If the 1st insured crop is the subsequent crop planted on the same acreage in the same crop year as the uninsured crop, the double crop records are based on the subsequent crop (1st insured crop). Refer to examples in D below.

3 Refer to C below for what constitutes acceptable records and see example 4 in D below for an example of using someone else's double-cropping records. When the double-cropping history requirements have been met based on someone else's records, the double-cropping exemption may only be used for the exact same acreage for which the double-cropping records were provided.

(4) The amount of acreage the insured is double cropping in the current crop year does not exceed the number of acres for which the insured provides records, as required in (3) above.

C Acceptable Double-Cropping Records

Acceptable double-cropping records must include, but is not limited to:

(1) Crop insurance records that show both production and acres, including records used for APH, claims, appraisals, bin measurements, etc.

***

(2) Elevator ledger sheets (i.e., settlement sheets from elevator) showing the amount of production from double-cropped acreage (Insured has identified the unit/acreage from which the production has come on the settlement sheet, and using farm management or trucking records, insured's can designate which loads shown on the settlement sheet were from double-cropped acreage if production from both double cropped and single cropped acreage is on the same settlement sheet.), or

(3) FSA documents, FSA maps, or bin measurements showing the amounts of production or acreage that was double-cropped.

CLARIFICATION: Potential production from appraised acreage (including acreage by-passed by a processor) of an insured crop would meet the requirement for records of acreage and production that show double-cropping history, provided it also meets the criteria in B (1) above. Short-rated wheat acreage cannot be considered for double-cropping history since such acreage is not appraised and does not meet the criteria in (1) above.

D EXAMPLES OF DOUBLE-CROPPING ELIGIBILITY

EXAMPLE 1: A producer on Farm A had double cropped 300 acres of wheat and soybeans three years ago. This same producer on Farm B (same county) had double cropped 300 acres of wheat and soybeans the previous year. These are the only double cropping records this producer has for the last four crop years. This insured would be eligible for 300 acres of double cropping wheat and soybeans for the current crop year in this county.

EXAMPLE 2: A producer on Farm A had double cropped 200 acres of wheat and soybeans for one year out of the last four crop years and for another year out of the last four crop years, the same producer double cropped 200 acres of wheat and sunflowers on Farm B (same county). The insured would be eligible for 200 acres of double cropping wheat in this county.

EXAMPLE 3:

Question: If an insured double-cropped 50 acres somewhere in the county and the insured's unit structure is an Enterprise unit with different fields and different APHs, which 50 acres will be considered the double cropped acreage that the AIP pays 100% on the first insured crop acres on which a second crop is planted?

Answer: The insured has the choice of whichever 50 acres in the county he/she desires.

EXAMPLE 4: The insured had no double-cropping history of his/her own in the county in which the claim is being made. However, part of the land the insured is farming this crop year is land he/she acquired from another person.

Out of 10 fields of the 1st insured crop (wheat) planted in the county, 3 of those fields (fields A, B, C in tract 1044) of section 20 have a 2nd crop (soybeans) planted. Of those 10 fields, two of those fields were farmed by another person in previous crop years. The other person has double-cropping records for 5 fields of wheat followed by soybeans in the county for two of the last four crop years. These records show that two of these fields (fields A and C) are the exact same acreage on which the insured planted the wheat followed by soybeans. Field B is not the same exact acreage.

QUESTON: Will the insured be able to receive a 100% wheat indemnity payment on fields, A, B, and C if the 1st and 2nd crop acreage in all three of these fields suffered a loss and an indemnity is due on both crops?

ANSWER: The insured will be able to receive a 100% indemnity payment on the wheat planted in field A and C. However, the insured will only be able to receive a 35% indemnity payment on field B since field B was not one of the fields for which the other person had double-cropping history.

EXAMPLE 5:

1st insured Crop for 2005 crop year: Wheat Planted History: 1999 CY 100 acres of wheat harvested 2000 CY 200 acres of wheat harvested 2001 CY 0 acres of wheat planted 2002 CY 0 acres of wheat planted 2003 CY 300 acres of wheat; not harvested/not appraised. 2004 CY 0 acres of wheat planted.	Subsequent insured crop in the 2005 crop year is PP Soybeans History: 1999 CY 100 acres of soybeans planted on wheat acreage. 2000 CY 200 acres of soybeans planted on wheat acreage. 2001 CY 300 acres of soybeans planted 2002 CY 250 acres of soybeans planted 2003 CY 300 acres of soybeans planted on wheat acreage 2004 CY soybeans planted
Based on the 1st insured crop wheat, the insured has 100 acres of double cropping history in **two** out of the **past four crop years of the 1st insured crop**. You cannot count 2003 as a double cropping year because the unharvested wheat acreage was not appraised. In the three years wheat was planted, there were two years in which wheat was followed by soybeans – 1999 and 2000, and out of those two years, only 100 acres were planted in both of those years. Two hundred acres could not qualify as the double-cropped acreage because 200 acres of soybeans were not planted in both years, but 100 acres were.	

EXAMPLE 6:

1st Crop Planted for 2005 crop year: Wheat Planted but not insured (insurance is available for wheat in this county.) History: 1999 CY 100 acres of wheat harvested 2000 CY 200 acres of wheat harvested 2001 CY 0 acres of wheat planted 2002 CY 0 acres of wheat planted 2003 CY 300 acres of wheat; not harvested/not appraised. 2004 CY 0 acres of wheat planted.	**1st insured crop for 2005:** Subsequent insured crop in the 2005 crop year is PP Soybeans and is the 1st insured crop. History: All soybean acreage planted below was harvested. 1999 CY 100 acres of soybeans planted on wheat acreage. 2000 CY 200 acres of soybeans planted on wheat acreage. 2001 CY 300 acres of soybeans planted 2002 CY 250 acres of soybeans planted 2003 CY 0 acres of soybeans planted on wheat acreage 2004 CY 0 acres of soybeans planted
Based on the 1st insured crop (soybeans), the insured has only 100 acres of soybean double-cropping history because there is only 100 acres of double cropping history in **two** out of the **past four crop years of the 1st insured crop, soybeans**. In the last four years of the 1st insured crop soybeans, there were two years that soybeans were planted and harvested in the same crop year that wheat was planted and harvested – 1999 and 2000, and out of those two years, only 100 acres were planted in both of those years. Two hundred acres could not qualify as the double-cropped acreage because 200 acres of soybeans were not planted in both years.	

EXAMPLE 7:

Total cropland 2545.9:

In 2005, the insured planted, reported, and harvested 399.9 acres of insured winter (fall-planted) wheat.

Question: Based on the following history, what amount of soybean acreage would be eligible for a 100% payment due to the double-cropping history?

CROP HISTORY FROM INSURED'S RECORDS OR APH RECORDS						
CROP YEAR	**OATS**	**CORN**	**SOYBEANS**			**WHEAT**
			NFAC PRACTICE	**FAC PRACTICE**	**TOTAL SB ACRES**	
2004	0.0	793.4	816.7	341.3	1158.0	349.6
2003	0.0	805.3	954.8	106.9	1061.7	106.9
2002	0.0	909.4	950.9	50.9	1001.8	200.8
2001	20.0	979.3	979.1	0.0	979.1	0.0
2000	30.0	0.0	1079.1	0.0	1079.1	0.0
1999	0.0	0.0	885.7	191.6	1077.3	268.7
MAX. ELIGIBLE PP ACRES FOR CROP (based on highest # of acres in one of the past four crop years.	**20.0**	**979.3**			**1158.0**	**349.6**

Answer: 191.6 acres would be the maximum acreage that could be claimed for double-cropping in 2005 crop year. Assume no soybeans in the NFAC column followed wheat.

CROP YEAR	**WHEAT (1st Insured crop in 2005 Crop Year)**	**1st CROP PLANTED (Yes/No)**	**FAC Soybeans in the last 4 crop years the 1st insured crop was planted**
2004	349.6	YES	341.3
2003	106.9	YES	106.9
2002	200.8	YES	50.9
2001	0.0	NO	n/a
2000	0.0	NO	n/a
1999	268.7	YES	191.6
Maximum FAC acres based on at least two of the last four crop years that the first insured crop was planted			**191.6**

Reason: Per the double crop history (FAC) above, 191.6 FAC acres is the maximum number of soybean acres that have been double cropped in at least 2 of the last four crop years that the 1st insured crop was planted (wheat). Out of the years there were double-cropping records on wheat acreage (2004, 2003, 2002, and 1999 crop years), 191.6 acres in 1999 would constitute the maximum number of double-cropped soybean acres. Since there was no wheat planted in 2000 or 2001, those years have to be eliminated (i.e., another crop did not follow wheat since wheat was not planted in those years). Policy provisions require two years of double cropping in at least two of the last four crop years in which the first insured crop was planted. Therefore, it cannot be 341.3 acres because 341.3 acres have not been double-cropped for two of those last four crop years, but 191.6 acres have; i.e., 191.6 of the 341.3 acres were double cropped in 2004; and in 1999, 191.6 acres were double cropped.

E Limitations of Number of Double-Cropped Acres

(1) The receipt of a full PP payment on both crops that are double cropped is limited to the number of acres for which the insured can demonstrate he/she has double cropped or that have been historically double cropped as specified in (1) (e) above. Ratios for increasing PP eligibility do not apply to this. For example: If the producer has the two years of required history and double cropped 40 acres one year and 50 acres in the other, then 40 acres would qualify for the double cropping exemption.

(2) If the 1st insured crop is wheat and based on the double-cropping criteria in subparagraph B above, the insured qualifies for 200 acres of double cropping wheat, and the insured reports 205 acres of PP wheat, the insured would only qualify to receive 100% payment on 200 acres based on the insured's double cropping history of 200 acres, and the other 5 acres would be subject to the 35% PP payment and APH reduction.

(3) If the 1st insured crop is planted wheat, and the subsequent insured crop is PP soybeans, the 5 acres would be removed from the acreage report and simply not qualify for a PP payment.

50 SUBSEQUENT PLANTED CROPS

A General Information

A subsequent crop is a crop following a 2nd crop (i.e., 3rd, 4th, etc.) or following an insured crop that is prevented from being planted after a 1st insured crop.

B Insurance is not provided for subsequent crops, unless it is a practice that is generally recognized by agricultural experts or the organic agricultural industry for the area to plant three or more crops for harvest on the same acreage in the same crop year, and additional coverage insurance provided under the authority of the Act is offered for the 3rd or subsequent crop in the same crop year. Insurance will only be provided for a subsequent crop if the criteria in both items (1) and (2) below are met.

(1) The insured must provide records acceptable to the AIP that show:

(a) The insured has produced and harvested the insured crop following two other crops that were harvested on the same acreage in the same crop year in at least two of the last four years in which the insured produced the insured crop; or

(b) The applicable acreage has had three or more crops produced and harvested on it in at least two of the last four years in which the insured crop was grown on it; and

(2) The amount of insurable acreage must not exceed 100 percent of the greatest number of acres for which the insured provides the records required in B (1) above.

51 LOSS ADJUSTMENT

A Be familiar with and understand the policy provisions for 1st insured crop, 2nd crop and subsequent crops, as outlined above.

B Inspection of 1st Insured Crop

(1) On an inspection for the 1st insured crop, the adjuster must obtain a certification from the insured certifying to the following or ask the insured the following: (1) whether the insured plans to plant a 2nd crop on any of the acreage released, **or** (2) whether the insured plans to cash rent the acreage to another person who plans to plant an insured crop on such acreage. Refer to PAR. 48 for more information regarding cash renting 1st insured crop acreage and also PAR. 46 B (2) (e) regarding the insured's written notice requirements. The election to not insure the 2nd crop must be made as specified in PAR. 46 B (2).

(2) Insureds can elect not to insure a 2nd crop on a 1st insured crop unit, when only a portion of the 1st insured planted crop unit is being released for another use and it is unknown whether there will be a loss on the 1st insured crop unit. The election applies to all 2nd crop acreage on the unit of the 1st insured crop.

(3) If the insured 1st crop is insured under the Common Crop Insurance Policy Basic Provisions, and the insured does not plan to insure the 2nd crop acreage, the AIP must obtain a signed written notice (signed certification) from the insured at this time so stating, unless it is for a GRP or GRIP crop. (Refer to PAR. 46 B (2) (b) 2 if a 1st or 2nd crop or both crops are insured under GRP/GRIP policies.) Follow the individual AIP's instructions regarding the document to use in the completion of the written notice (certification). Refer to PAR. 46 A (8) and 46 B (2) (c) above for information pertaining to written notices.

(4) If the insured plans to plant and insure a 2nd crop, explain the insured's requirements about keeping separate production records and the consequences if the insured cannot provide the required records, as explained in PAR 46 B (3) (e) above. Refer to PAR. 52 below for instructions for recording the separate production on the Production Worksheet.

C Appraisal of 1st Insured Crop Acreage

When it is known that some acreage of the 1st insured crop will be planted to a 2nd crop, and this acreage is going to be appraised, it needs to be appraised separately from the acreage that will not be planted to a 2nd crop. Refer to PAR. 85 I for information pertaining to when it is known that a specific part of the 1st insured crop acreage in a field will be or probably will be planted to a 2nd crop.

D Inspection of 2nd Crop Acreage that is Insured

(1) If the insured has any other insured crops, there is the potential of having 2nd crop acreage that is insured. Verify whether the crop being inspected is insured 2nd crop acreage.

(2) When there is 1st and 2nd crop acreage within the same unit, obtain the insured's separate records of production of the 2nd crop acreage. Refer to PAR. 46 B (3) (e) for the record requirements. If the required records have not been kept, the production to count for the 1st and 2nd crop must include the allocation of

production as stated in subparagraph E below. For PP payments involving 2nd crop acreage, refer to the Prevented Planting Handbook.

E How to Prorate Production

When separate records of crop production have not been kept for 1st insured crop acreage and 2nd crop acreage, the production must be prorated. Use the same formula as is used for commingled production in PAR. 126. Also, refer to the example in the first Q&A in PAR. 53.

52 CLAIM FORM ENTRIES RELATIVE TO 1st INSURED AND 2nd INSURED CROPS

A Codes for 1st and 2nd Crops

(1) The following codes apply to all policies except clams and nursery, and apply to all insurance plans, except AGR and Livestock. More than one code may apply to a claim unit, but only one code per loss line.

(2) The multiple cropping code(s), as shown below, must be entered on the claim form (except replant claims), by the adjuster or any other person authorized to handle the claim, based on the insured's certified elected option; UNLESS the AIP generates through their computer system the appropriate multiple cropping codes correlating with the insured's certified elected option for first or second crop acreage; e.g., option to plant a 2nd crop but not insure it would generate a WI code on a line of 1st insured planted crop acreage, or option to plant and insure a 2nd crop would generate an IR code on a line of 1st insured planted crop acreage, etc. The insured's certified elected option, and when applicable, the adjuster's verification of the insured's actual actions, must be maintained in the insured's loss file.

(3) When insureds refuse to certify or are uncertain of their elected option for the 1st crop acreage, the AIP shall limit the indemnity or PP payment to 35%. However, if an insured's certification limits him/her to a 35% payment, the appropriate codes would be used; i.e., respective code to reinstate the remaining 65% (indemnity or PP payment), if 35% had already been paid; or 100% if 35% had not already been paid. The reverse would also apply; i.e., certification indicates the insured is entitled to 100% payment but actions limit insured to 35%.

(4) Multiple Cropping Code Table

CODES FOR 1st INSURED CROP LOSS LINES	DEFINITION	USE ONLY ON LINES OF 1st INSURED CROP ACREAGE WHEN. . .
WI (on planted acres)	**Waive insurance** on 2nd crop acreage 100% Indemnity on 1st insured crop acreage	The insured waives insurance on second crop acreage contained in unit of a first insured planted crop. **(1)** This waiver is based on the unit structure for each individual 1st insured planted crop unit that contains 2nd crop acreage; e.g., 100 acres of failed wheat, first insured crop (unit 00100). Soybeans (second crop) are insured and planted on 10 acres (unit 00300 soybeans) of the failed wheat acres (unit 00100). The insured **waives** insurance on the 10 acres of soybeans (2nd crop acres). Soybeans, 2nd crop acres (also unit 00300) are planted on 150 acres of the failed wheat (unit 00200), but the insured **elects NOT to waive** insurance on the 150 acres of soybeans (2nd crop acres) in unit 00300 soybeans. **(2)** The waiver must be done by the time specified in PAR. 46 and cannot be accepted at a later date. Once the waiver is signed, it cannot be retracted at a later date. **(3)** Insurance cannot be waived on 2nd crop acreage when the 1st insured crop acreage was prevented from planting.
NS (on planted acres)	**NO 2nd** <u>INSURED</u> **CROP** PLANTED ON 1st INSURED CROP ACRES 100% Indemnity on 1st insured planted crop acreage If insurance is waived for 2nd crop, use WI code above.	**(1)** At the time of the final inspection for the 1st insured crop acres, the AIP accepts the insured's certification that no 2nd crop will be planted; **or** **(2)** The insured did not waive insurance on the 2nd crop, the indemnity for the 1st insured crop has not been processed yet, and the adjuster has verified after it is too late to plant a 2nd crop that a 2nd crop was not planted. If an indemnity payment of 35% has already been made on the 1st insured crop acreage and it is determined that a 2nd insured crop was not insured, or if insured, was not planted, the RI code would be used rather than the NS code. Refer to the RI code. If someone other than the insured plants a 2nd crop on any of the 1st insured crop acreage, policy provisions require the insured to notify their AIP of this.

CODES FOR 1st INSURED CROP LOSS LINES	DEFINITION	USE ONLY ON LINES OF 1st INSURED CROP ACREAGE WHEN. . .
NS (on PP acres)	**NO 2nd CROP** ON PP 1st INSURED CROP ACRES 100% PP payment on first insured crop acreage	The AIP, in accordance with Section 5 E of the Prevented Planting Handbook, allows and accepts the insured's certification that no 2nd crop will be planted for harvest, or an approved planted cover crop or volunteer crop will not be hayed (including swathed or windrowed) or grazed from the PP acreage prior to November 1, or harvested (for other than haying or grazing) at any time. **(1)** If the AIP cannot or does not allow the insured's certification, an initial PP payment of 35% will be made as stated in Section 5 E of the Prevented Planting Handbook. **(2)** AIPs should require insureds to sign a statement certifying they will notify them if another person plants a second crop for harvest on the PP acreage (1st insured crop) or if another person hays (including swaths or windrows) or grazes an approved cover crop or volunteer crop prior to November 1st, or otherwise harvests (for other than haying or grazing) a cover crop or volunteer crop at any time. **(3)** If 35% of the PP payment has been made and it is determined the insured is entitled to the remaining 65% of the PP payment, the RI code rather than the NS code will be used. Refer to the RI code for PP.
DC	Meets **Double-Cropping** requirement 100 % Indemnity or PP payment on 1st insured crop	It has been verified the insured meets all double-cropping requirements as stated in PAR. 49 above.
IR	65% **Indemnity Reduction** of the 1st insured crop **(planted acreage)**	**Double cropping eligibility does not apply, and insurance was not waived on the 2nd crop acreage.** **(1)** The insured is unsure if a 2nd crop will be planted; **(2)** The insured states a 2nd crop will be planted and insured; **(3)** A 2nd crop is insured and has been planted; **(4)** The AIP does not allow or does not accept the insured's certification that a 2nd crop will not be planted; or **(5)** The AIP accepts the insured's certification that a 2nd crop would NOT be planted and 100% of the indemnity was paid. However, it subsequently is planted, suffers an insurable loss, and the insured accepts the 2nd crop indemnity.

CODES FOR 1st INSURED CROP LOSS LINES	DEFINITION	USE ONLY ON LINES OF 1st INSURED CROP ACREAGE WHEN. . .
RP	65% **Reduction of PP payment** of the 1st insured crop **(PP acreage)**	**It is determined that a PP payment is payable on the 1st insured crop and double cropping eligibility does not apply but:** **(1)** At the time of final inspection for the PP payment, the insured is unsure if any of the following will occur, **or** the insured states or certifies that one of the following will occur: ▪ 2nd crop will be planted for harvest after the FPD (or after the LPP, if applicable) for the 1st insured crop; ▪ Cover crop will be planted and hayed (including swathed or windrowed) or grazed after the LP period (FPD if LP period does not apply) but prior to November 1; ▪ Volunteer crop will be hayed (including swathed or windrowed) or grazed after the LP period (FPD if LP period does not apply) but prior to November 1; or ▪ A cover crop or volunteer crop will be harvested (other than haying or grazing) at any time. **(2)** The insured or someone else actually carries out one of the items in (1) above. **(3)** The AIP accepted the insured's certification that any of the items in (1) above would not occur and 100 % of the PP payment was made. However, subsequent to the certification and payment of 100% of the PP payment, the insured or another person carries out one of the items in (1) above.
RI (for planted acres indemnity)	**Restore Indemnity** of 1st insured crop to 100% **(planted acres)**	**The 1st insured crop's indemnity was reduced to 35%, and the**: **(1)** Insured 2nd crop did not suffer a loss; or **(2)** Adjuster verified a 2nd crop was not insured, or if insured, was not planted; or **(3)** Indemnity of 1st insured crop was erroneously reduced; or **(4)** Insured waives indemnity on the 2nd crop acreage. Adjusters will only use this code on corrected claims they prepare that also need the indemnity restored. If no corrected claim is required, the AIP will use this code internally in the computer program. Refer to PAR. 131 for the reasons that corrected claims are prepared. Documentation must be placed in the insured's loss file that explains why the indemnity is being restored.

CODES FOR 1st INSURED CROP LOSS LINES	DEFINITION	USE ONLY ON LINES OF 1st INSURED CROP ACREAGE WHEN. . .
RI (for PP Payment)	**Restore PP Payment** of 1st insured crop to 100%	**The first insured crop PP Payment was reduced to 35% and the:** **(1)** Adjuster verified a 2nd crop was not planted, a volunteer or cover crop was not hayed (including swathed or windrowed) or grazed prior to Nov. 1, or a volunteer or cover crop was not otherwise harvested. **(2)** Insured stated or certified a 2nd crop would be planted, or a volunteer or cover crop would be hayed (including swathed or windrowed), grazed, or otherwise harvested. However, subsequent to the statement or certification, the adjuster verifies that a 2nd crop was not planted, or a volunteer or cover crop was not hayed (including swathed or windrowed), or grazed prior to November 1, or otherwise harvested. If a cover crop or volunteer crop that still exists November 1 or later appears to be harvestable, the PP payment cannot be restored until the final disposition of the cover crop or volunteer crop is determined. **(3)** PP payment of 1st insured crop was erroneously reduced. Adjusters will only use this code on corrected claims they prepare that also need the PP payment restored. If no corrected claim is required, the AIP will use this code internally in the computer program. Refer to PAR. 131 for the reasons that corrected claims are prepared. Documentation must be placed in the insured's loss file that explains why the indemnity was restored.
FC	**1st** *insured* **Crop** acreage for which no other multiple cropping code applies and 100% indemnity is applicable	**EXAMPLE:** First insured crop unit 00100 is 80 acres of wheat (Field A, 30 acres and Field B, 50 acres.) The unit suffers a loss. However, only Field B contributed to the unit loss. The acres in Field A did not. The AIP accepts the insured's certification that no 2nd crop will be planted on Field B and that soybeans (2nd crop) will be planted on Field A. Even if the soybeans (2nd crop) planted in Field A suffers an insurable loss, the 1st crop acreage on these 30 acres would receive 100% indemnity. Therefore, at the time unit 00100 wheat indemnity is paid, 50 acres would be coded as NS, and the 30 acres would be coded as FC, indicating the insured is paid 100% on the entire unit. The FC code cannot be used when all of the first crop acres were planted to a second crop, unless some of the 1st crop acres were not subject to an indemnity reduction.

CODES FOR 2nd CROP LOSS LINES	DEFINTION	USE ONLY ON LINES OF 2nd CROP ACREAGE WHEN . . .
SC	**2nd Crop** Acreage that is **Insured**	This insured crop was planted on the same acreage of the 1st insured crop (planted or prevented from planting) within the same crop year, and if the 1st insured crop acreage was planted acreage, the indemnity for the 2nd crop acreage was not waived. This also applies to the 2nd crop acreage that is double crop PP acreage. The indemnity for 2nd crop acreage cannot be waived if the insurable loss on the 1st insured crop was prevented planting.
SW	**Second Crop** Acreage Insured - Indemnity **Waived** Indemnity cannot be waived when the first insured crop has payable PP Payment.	**(1)** The acreage for the entire unit is 2nd crop acreage for which the indemnity is waived. **(2)** The acreage on this claim unit has both 1st insured crop planted acreage and the 2nd crop acreage indemnity is waived, **or** **(3)** The acreage on this claim unit has 2nd crop acreage on which part of the 2nd crop acreage indemnity is waived and some of it is not. The indemnity waiver is based on the unit structure for each individual 1st insured crop unit that contains 2nd crop acreage. Waiver of the 2nd crop acreage indemnity **can** <u>be allowed</u> when acreage of a 2nd crop unit lies in two different units of the 1st insured crop acreage. For example: 100 acres of failed wheat, 1st insured crop (unit 00100). Soybeans, 2nd crop (unit 00300), is insured and planted on 10 acres of Field A, the failed wheat acres (unit 00100). The insured **waives** the payable indemnity on the 10 acres of soybeans (second crop acres). Soybeans (second crop) is insured and planted on 150 acres of the failed wheat (unit 00200), but the insured **elects NOT to waive** the payable indemnity on the 150 acres of soybeans (2nd insured crop acres) that are also part of unit 00300 soybeans. Waiver of the 2nd crop acreage indemnity **cannot** <u>be allowed</u> when acreage of a 2nd crop unit lies in only one unit of the 1st insured crop acreage. For example: Unit 00101 consisted of 100 acres of failed wheat acres – 50 acres, Field A and 50 acres, Field B. Unit 00201 soybeans is the same legal description as unit 00101 wheat. Field A and B are planted to soybeans; i.e., total of 100 acres soybeans (2nd crop). In this situation, the insured cannot waive only a portion of the 100 acres since the acreage lies in the unit structure of the 1st insured crop. The insured can either waive indemnity on all 100 acres, or none. Exception to this would be if part of the 100 acres qualifies for double cropping; e.g., Field A (50 acres) qualifies for double cropping acreage. Then the indemnity on the remaining 50 acres in Field B that did not qualify for double cropping acres could be waived.

B Multiple-Cropping Exception Flag (Field 41 of T-21 Record in the Data Acceptance System (DAS))

(1) General Information.

(a) Multiple-Cropping codes (M-C codes) are required to be transmitted for each line of the Production Worksheet that is transmitted on the record entitled "Loss Line-Type 21" (hereafter called the 21 Record) through the Risk Management Agency's DAS. The M-C code identifies whether the indemnity amount due for the line is 100% or as applicable, reduced by 65% due to a 1st and 2nd insured crop on the same acreage in the same crop year.

(b) However, current DAS processing methods may not calculate indemnities properly when there is a net negative indemnity (production exceeds guarantee) on some acreage (loss lines) not subject to the 65 percent reduction. The DAS uses a negative (-) and positive (+) type calculation to determine the indemnity amount for all loss lines in the unit. This can result in no indemnity due when the 65% reduction is applicable on some acreage in a unit even though the overall unit is in a loss situation and an indemnity, although reduced, should be paid. It can also result in the indemnity not being as much as it should be. In these cases, the usual calculation must be modified and an exception flag will be used.

(c) It is expected that AIPs will automate the calculation needed to determine whether the exception flag will be used and the modification of the indemnity calculation. **However, for the purpose of understanding the steps used in making this determination and the modified indemnity calculation, the following is provided:**

Step 1 - Determine if any of the lines on the PW (T-21 Record) within a unit has an M-C Code of 'IR' and there are other lines on the PW (T-21 Record) with any of the following codes (DC, FC, WI, SC, NS, RI).

Step 2 - For any of the loss lines having one of the codes in the parenthesis in Step 1, determine the "Farm Unit Deficiency" (FUD) or "Loss" for each of these loss lines. (*Loss guarantee minus the production to count) e.g., loss guarantee of 1200 bu. minus 1300 production to count = -100 bu. (negative farm unit deficiency).

Step 3 - Determine the positive and negative dollar "Payable Indemnity" for each of the loss lines determined in Step 2. (Farm unit deficiency X price election).

Step 4 – Sum the results of step 3 (sum of "Payable Indemnity" lines).

*Loss guarantee = stage guarantee from PW

Step 5 - If the results of step 4 is less than or equal to “0," then .35 is multiplied by the indemnity for all the lines in the unit, except any line with a M-C Code of ”SW” or any line with a Guarantee Reduction flag of **“P” or **“E.”

**“P” = prevented planting and “E” = prevented planting when there are no remaining eligible acres for the crop claimed as prevented planting and remaining eligible acres from another unit or crop is used to pay the prevented planting payment for the crop claimed.

Step 6 – If the M-C Exception Flag is applicable, an “X” is transmitted in Field 41 (M-C Exception Flag) of the T-21 record for the lines with a M-C Code of DC, FC, WI, SC, NS, and RI.

(d) The lines with DC, FC, WI, SC, NS, and RI will be calculated at 100% indemnity unless this exception exists.

(e) **Examples of indemnity showing exceptions are needed.**

1 Example 1 indemnity has been calculated without the exception to illustrate how there is a loss payable but due to summing negative and positive lines and then applying the multi-cropping percentage, it results in a no indemnity due claim.

2 Example 2 indemnity has been calculated without the exception to illustrate how there is a positive loss payable, and the indemnity amount calculated out in this instance is a positive indemnity. However, when the indemnities for all lines (only 1 line in this example) with M-C Codes of DC, FC, WI, SC, NS, and RI are summed, there is a negative figure, which means the exception applies. In this instance although the calculated indemnity is a positive indemnity, the indemnity is not as much as it should be. When the indemnity is calculated with the Exception flag, the indemnity is increased.

EXAMPLE 1 WITHOUT EXCEPTION:

Assume the insured has 1.000 share.

Loss Line	Stage Guar.	Acres	Line Guar.	PTC	Loss (FUD)	PE	Indem. before M-C Code	MC Code	% of Indem.	Payable Indem.
1	40	25.0	1000.0	1200.0	-200.0	$3.35	-$670.00	NS	100%	$-670.00
2	40	25.0	1000.0	900.0	+100.0	$3.35	+335.00	IR	35%	$+117.25
3	20	25.0	500.0	350.0	+150.0	$3.35	+502.50	DC	100%	$+502.50
			2500.0	2450.0	+50.0					$ -50.25

No indemnity due even though the unit loss FUD is 50 bushels.

EXAMPLE 1 OF THE SAME INDEMNITY CALCULATED USING THE M-C EXCEPTION.

Assume the insured has 1.000 share.

Loss Line	Stage Guar.	Acres	Line Guar.	PTC	Loss (FUD)	PE	Indem. before M-C Code	MC Code	MC Exc. Flag	% of Indem. with Except.	Payable Indem.
1	40	25.0	1000.0	1200.0	-200.0	$3.35	-$670.00	NS	X	=35%	$-234.50
2	40	25.0	1000.0	900.0	+100.0	$3.35	+335.00	IR		=35%	117.25
3	20	25.0	500.0	350.0	+150.0	$3.35	+502.50	DC	X	=35%	175.88
			2500.0	2450.0	+50.0$						+58.63
										(Rounded to whole $ =+ $59 indemnity due)	

EXAMPLE 2 WITHOUT EXCEPTION:

Assume the insured has 1.000 share.

Loss Line	Stage Guar.	Acres	Line Guar.	PTC	Loss (FUD)	PE	Indem. before M-C Code	MC Code	% of Indem. With Except.	Payable Indem.
1	26.7	40.0	1068.0	1449.0	-381.0	$4.83	-$1840	NS	100%	$-1840.00
2	26.7	91.8	2451.0	936.4	+1514.6	$4.83	+7316	IR	35%	$+2561.00
			3519.0	2385.4	+1136					$+721.00

In this instance, the only line to total is the NS loss, line. Since $-1840.00 is less than $0.0, this indemnity calculation qualifies for the M-C Exception.

EXAMPLE 2 OF THE SAME INDEMNITY CALCULATED USING THE M-C EXCEPTION.

Assume the insured has 1.000 share.

Loss Line	Stage Guar.	Acres	Line Guar.	PTC	Loss (FUD)	PE	Indem. before M-C Code	MC Code	MC Exc. Flag	% of Indem. with Except.	Payable Indem.
1	26.7	40.0	1068.0	1449.0	-381	$4.83	-1840.00	NS	X	=35%	$ -644.00
2	26.7	91.8	245.1.0	936.4	+1514.6	$4.83	+7316.00	IR		=35%	$+2561.00
			3519.0	2385.4	+1133.6						$1917.00

In this instance, the indemnity is increased due to the MC-Exception being applied.

C Entry Instructions in Section I of the Production Worksheet (ACREAGE APPRAISED, PRODUCTION AND ADJUSTMENTS)

Item No. **Information Required**

FOR CANOLA/RAPESEED, SMALL GRAIN CROPS, SAFFLOWERS, SUNFLOWERS, CORN, GRAIN SORGHUM, AND SOYBEANS:

16. **Field ID:** For each line entry for which there is a multi-crop code, enter the Field identification symbol from a sketch map or an aerial photo.

17. **Multi-Crop Code:** Enter the applicable two-digit multi-crop code (refer to PAR. 52 A (4) above for the applicable multi-crop codes and additional instructions regarding situations where a second crop will be planted on first (original) crop acreage within the same crop year). For any 3rd (subsequent or additional) crop, enter only the field identification symbol in item 16.

Entry Instructions for Narrative:

Document if 2nd crop acreage is involved with this crop unit, the name of the 1st insured crop planted within the crop year on the 2nd crop acreage. Enter the field identification symbol, the unit number, and policy number (if known) if different than this claim.

If more space is needed, document on a Special Report, and enter "See Special Report." Attach the Special Report to the Production Worksheet.

FOR ALL OTHER CROPS FOR WHICH 1st/2nd CROP APPLY:

A. **Field ID:** For each line entry, draw a diagonal line and enter the field identification symbol from a sketch map or an aerial photo in the upper portion of the block.

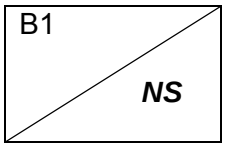

In the lower portion of the block, enter the applicable two digit multi-crop code (refer to the PAR.52 A (4) above for the applicable multi-crop codes and additional instructions regarding situations where a second crop will be planted on first (original) crop acreage within the same crop year). For any 3rd (subsequent or additional) crop, enter only the field identification symbol. In the bottom of the last line entry for each inspection or in the margin (or in a separate column), enter the date of inspection.

Entry Instructions for Narrative:

Document if 2nd crop acreage is involved with this crop unit, the name of the 1st insured crop planted within the crop year on the 2nd crop acreage. Enter the field identification symbol, the unit number, and policy number (if known) if different than this claim.

If more space is needed, document on a Special Report, and enter "See Special Report." Attach the Special Report to the Production Worksheet.

D Entry Instructions for Section II of the Production Worksheet (HARVESTED PRODUCTION)

FOR ALL CROPS FOR WHICH 1st/2nd CROP APPLY:

GENERAL INFORMATION

SEPARATE LINES ARE REQURIED: (1) for production from 1st and 2nd crop acreage, or (2) when a 2nd crop will be or is planted on the 1st crop acreage within the same crop year. If production has not been kept separate, there must be separate lines of pro-rated production as stated in PAR. 46 B (3) (e) 2.

FOR CANOLA/RAPESEED, SMALL GRAIN CROPS, SAFFLOWERS, SUNFLOWERS, CORN, GRAIN SORGHUM, AND SOYBEANS:

Item No.	Information Required
47b.	**Field ID:** If the claim is for a 1st or 2nd crop and the 2nd crop is or will be planted on 1st crop acreage within the same crop year, enter the field identification symbol. For any 3rd (subsequent or additional) crop, enter only the field identification symbol. (Refer to the Narrative instructions.)
48.	**Multi-Crop Code:** Enter the applicable two-digit multi-crop code (refer to PAR. 52 A (4) above for the applicable multi-crop codes and additional instructions regarding situations where a second crop will be planted on first (original) crop acreage within the same crop year). For any 3rd (subsequent or additional) crop, enter only the field identification symbol in item 16.
49.-52. B.-E.	When production from 1st and 2nd crop acreage was not kept separate, prorate the production as stated in 46 B (e) 2, and enter the following: " Prorated Production –1st and 2nd crop."
56.	Enter the calculated number of prorated bushels, tons, lbs., or CWT (units of measure as appropriate for the crop) due to commingling production from 1st and 2nd crop acreage.

FOR ALL OTHER CROPS FOR WHICH 1st/2nd CROP APPLY:

Item No.	Information Required
A.2.	**Field ID:**
.	If the claim is for a 1st or 2nd crop and the 2nd crop is or will be planted on 1st crop acreage within the same crop year, enter the field identification symbol. For any 3rd (subsequent or additional) crop, enter only the field identification symbol. (Refer to the Narrative instructions.)
B.-E. ***	When production from 1st and 2nd crop acreage was not kept separate, prorate the production to the as described in PAR. 46 B (3) (e) 2, and enter the following: "Prorated Production –1st and 2nd crop."
I.	**Bu., Ton, Lbs., CWT:**
	Enter the calculated number of prorated bushels, tons, lbs., or CWT (units of measure as appropriate for the crop) due to commingling production from 1st and 2nd crop acreage.

53 FIRST (1st) AND SECOND (2nd) CROP QUESTIONS AND ANSWERS

The 1st insured crop is 130 acres of winter wheat on unit 00100. The share is 100%, the price election is $3.35, and the level of coverage is 65%. Field A has 100 acres of irrigated winter wheat with a 50-bushel per-acre guarantee. Field B has 30 acres of non-irrigated winter wheat with a 25 bushel per acre guarantee. The total guarantee for unit 00100 wheat is 5750 bushels.

All wheat acreage is harvested and an indemnity is due. Total harvested production to count from the 130 acres is 3000.0 bushels. However, separate production records for fields A and B were not kept.

After completion of wheat harvest, fields B and C are timely planted to insured soybeans. The insured does not qualify for the double cropping exception. Therefore, the reduction specified in section 15 of the Basic Provisions will apply to the wheat acreage in field B.

Field A	Field B	Field C
100 acres IRR wheat 1st insured crop	30 acres NI Wheat 1st insured crop	30 acres Fallow
Unit 00100 Wheat	Unit 00100 Wheat	Unit 00100
No insured 2nd crop	2nd Crop = 30 acres of Soybeans – Unit 00101	1st insured Crop = 30 acres of Soybeans – Unit 00101

Q 1. After appropriately applying the reduction, what would the initial wheat loss indemnity be?

A 1. The following answer is given under the assumption that it is known, at the time the initial payment is made, that no insured 2nd crop will be planted in field A:

Since separate records were not kept on the wheat acres subject to reduction, prorate wheat production based on the total bushel liability, as follows:

The Total Wheat Guarantee is 5750 bu.
(Field A = 100 ac. X 50 bu. = 5000 bu. guar + Field B = 30 ac. X 25 bu. = 750 bu.)

Liability for Field B (30 acres of NI wheat) 30 x 25 = 750 bushels

750 bu. (NI wheat guarantee in field B) ÷ 5750 bu. Total Wheat Guarantee = .1304 Proration Factor.

In this case, production to count for the non-irrigated acreage (field B) is 391.2 bushels (3,000 bu. total production to count x .1304 Proration Factor) which is 358.8 bushels less than the guarantee for the acreage (750.0 - 391.2 = 358.8).

The initial payment for fields A and B is $8432 and is calculated as follows:

358.8 bushels X $3.35 per bushel X 1.000 share = $1201.98
$1201.98 X .65 indemnity reduction factor = $781.29 reduced indemnity rounded to $781 indemnity for field B.

$9213 total indemnity for fields A & B (5750 bu. – 3000 bu. = 2,750 bu. X $3.35 price election X 1.000 share) – $781. = $8432 = indemnity for fields A and B.

Q 2. Same scenario as question 1 except this time separate wheat production records were kept for fields A and B. 2200 bushels were harvested from the 100 acres in field A and 800 bushels were harvested from the 30 acres in field B. What would the initial wheat indemnity be?

A 2. Since there is no loss attributable to the 30 acres (field B) of non-irrigated wheat (800 bushels of production to count exceeds the 750 bushel guarantee for the acreage, the wheat loss would not be limited. The wheat indemnity would be $9212.50 and rounded to $9213 in accordance with rounding rules found in PAR. 107.

The 2nd crop is soybeans. Unit 00200 contains 60.0 insured acres of which (field B) 30 acres are NI-FAC 2nd insured crop and (field C) 30 acres are NI-NFAC 1st insured crop. The NI-FAC guarantee (field B) is 25 bushels per acre and the NI-NFAC guarantee (field C) is 35 bushels per acre. Total guarantee for unit 00200 soybeans is 1,800 bushels. The share is 100%.

2nd CROP

Field A	Field B	Field C
100 Wheat acres (1st insured crop) Unit 00100 Wheat No insured 2nd crop	1st insured crop is 30 acres of Winter Wheat, Unit 00100 **2nd** insured Crop NI-FAC Soybeans Unit 00200 Soybeans	1st Insured Crop is 30 acres of NI-NFAC Soybeans Unit 00200 Soybeans

The entire soybean acreage is harvested and the insured accepts an indemnity based on a claim indicating the harvested production to count from the 60 acres is 1500 bushels. However, separate production records for fields B and C were not kept. For questions 3-5, assume the 1st crop wheat (unit 00100 – fields A and B) has an indemnity due.

Q 3. Is an indemnity payment for the other 65% of the wheat loss due the insured?

Total soybean guarantee is 1800 bu. (30 ac. X 25 bu. + 30 ac. X 35 bu.)
Guarantee for Field B = 750 bu.

750 bu. guarantee for field B ÷ 1800 bu. = .41666 rounded to .4167 proration factor

A 3. Production to count allocated to 2nd crop soybeans in field B would be 625.1 bushels (.4167 proration factor X 1500 bu. total production from fields B and C). Since a soybean unit indemnity is accepted by the insured and since 625.1 bushels is less than the production guarantee for the 2nd crop soybeans acreage (750 bushels), the remaining 65% loss on Field B wheat would not be paid.

Q 4. Same scenario as question 3 except this time assume separate soybean production records were kept for field B and C. 800 bushels were harvested from the 30 acres in Field B and 700 bushels were harvested from the 30 acres in field C. Is an indemnity payment for the other 65% of the wheat loss due the insured?

A 4. Since 800 bushels of soybeans were harvested from field B and this amount exceeds the 750-bushel guarantee for the acreage, the remaining 65% loss on Field B wheat would be paid.

Q 5. Assume separate soybean production records were kept for fields B and C except this time, the total harvested production from the 60 acres is 2000 bushels. However, only 500 bushels were harvested from the 30 acres in field B and 1500 bushels were harvested from the 30 acres in Field C. Is an indemnity payment for the other 65% of the wheat loss due the insured?

A 5. Since there is no loss for the soybean unit, the wheat loss would not be limited and the remaining 65% loss on field B wheat would be paid.

SECTION 10 UNIT DETERMINATION

54 UNIT VERIFICATION

Unit verification will be made by the adjuster during an on-the-farm inspection; however, no further DIVISION of optional/guideline units (hereafter called optional units) will be made at loss time. Basic/policy unit(s) (hereafter called basic units) will be corrected when found to be in error.

A Verifying Unit Structure

(1) Be knowledgeable with (and as needed refer to) unit provisions in the applicable policy provisions or endorsement (or if applicable, unit division guidelines in the SPOIs).

(2) Use the procedure in PAR. 55 (Unit Structures) below.

(3) More than one basic unit.

Verify with the insured that the reported shareholders have an interest in the crop. If you suspect or question whether there is an interest or that there are separate insurable interests (such as spouse, children or other household members), contact the AIP.

(4) Optional units

Determine that all field requirements[1/] are met for qualification of the unit structure (other AIP personnel will verify record (APH) requirements unless delegated to you):

[1/] Field requirement refers to items that can be determined from a field visit or review of aerial photo of the growing crop; e.g., does the planted crop cross section lines, is the irrigated/non-irrigated acreage planted in a manner that meets the requirements to qualify for separate optional units.

(a) Optional units by section, section equivalent, or FSN

1 Locate fields and verify that there is acreage planted in separate legally identifiable sections or other applicable optional unit separators allowed by the crop policy.

2 Visit fields and determine whether planting patterns have crossed optional unit boundaries; e.g., section lines, FSN lines, or other section equivalent boundary lines.

(b) Optional units by irrigated and non-irrigated practice

Visit the fields and determine if planting patterns and other requirements outlined in this procedure qualify the unit as separate optional units by irrigated and non-irrigated practices.

(c) Optional units for acreage insured under an organic farming practice

Verify that the acreage qualifies as organic farming practice acreage and that the acreage specified for the optional unit under the organic farming practice is correct by visiting the fields and verifying against organic records required under the policy provisions for organic farming practices. Refer to PAR. 43 for additional information regarding organic farming practices.

(d) Optional Units by Unit Division Option

If a Unit Division Option is in effect, the section for the optional unit will be identified by the legal identification of the parcels of land that has been aggregated to form such "section." To verify that such "section" qualifies for an optional unit, verify it in the same manner that you would other optional units divided out by section; e.g., planting pattern does not cross section lines, production is kept separate, etc.

B Incorrect Unit Structure

Basic units will be corrected at loss time (or any other time they are found to be incorrect); however, no further division of optional units will be made at loss time. Refer to PAR. 29 B (5) (c).

55 UNIT STRUCTURES

A Guidelines. Each insured crop has its own unit structure defined in the policy and/or respective endorsement. However, the CAT Endorsement generally limits the units available for each insured crop to BASIC units determined ONLY by the crop share arrangement on the date coverage begins for the crop year. Further unit division (examples: type, noncontiguous land, FSA FSN, etc.) as defined in the applicable crop endorsement, policy provisions, or SPOIs are not allowed under the CAT Endorsement. See the CAT Endorsement for the unit definition. All insurable acreage of each insured crop within the unit is the basis for determining coverage, premium, and indemnities.

*** B Basic Units for Tobacco. For Tobacco policies with additional coverage, in lieu of the definition in the Basic Provisions, a basic unit is all insurable acreage of an insurable type of tobacco in the county in which the insured has a share on the date of planting for the crop year and that is identified by a single FSA FSN number (without regard to state
*** or county lines) at the time insurance first attaches under the crop provisions for the crop year.

*** C CAT Coverage/Basic Units for Dry Beans and Tobacco. The CAT Endorsement
*** changes the basic unit structure for dry beans and tobacco to units by crop share arrangement. A policy covering all landowners with an undivided interest in the land upon which an insured crop is planted is limited to one basic unit. GRP policies at the CAT level of coverage are limited to one unit per crop per county.

D Unit Structures for Most Crops. For most other crops, the basic unit structures in the policies are as follows, except the CAT Endorsement limits to basic units. Refer to subparagraph E for dry beans: (Refer to applicable policy and crop provisions.)

(1) **Basic Units**

A basic unit for most other crops is all of the insurable acreage of a crop in the county on the date coverage begins for the crop year in which the insured has:

(a) **100 percent share in the crop**. This is one basic unit. Refer to PAR. 13 B (1) and C for examples of 100 percent share arrangements.

(b) **Less than 100 percent share in the crop** (acreage is owned by one entity and operated by another entity on a share basis). A crop shared with each different landlord, tenant, or sharecropper is a separate basic unit. Reversed roles do qualify for separate basic units. For example: The insured is a landlord on part of the farming operation and a tenant on another part of the farming operation. Varying percentages of shares within a basic unit do not qualify for separate basic units. Refer to PAR. 13 B (2) and C for various examples of crop share arrangements.

(c) For loss adjustment purposes, production commingled from two or more basic units (including high-risk land excluded from additional coverage and insured under a CAT policy) will be allocated in proportion to the liability for the harvested acreage from the commingled units; refer to PAR. 126.

(2) **Optional Units**

When the policy allows, land that would otherwise be one basic unit may be divided into optional units according to the optional unit definition contained in the crop's Basic Provisions, crop provisions, and/or SPOIs. Optional units may be available when the acreage of the insured crop is located in separate, legally identifiable sections, section equivalents, or FSA FSNs, whichever applies. Some perennial crops allow optional units for acreage of the crop grown on non-contiguous land and/or for different type/varieties. Most crops allow optional units for irrigated and non-irrigated practices. Refer to subparagraph 55 E below for dry beans.

(a) **Qualification Requirements**. To qualify for optional units, all of the following must be met:

1 For APH crops, by the Production Reporting Date, the insured must file acceptable production reports[1/] for all planted insurable acreage for at least the most recent APH crop year in the base period that have been arranged according to the optional units that will be requested for the current crop year. (Refer to 4 below for exceptions.) The insured must have supporting records which can be independently verified, of planted acreage and production used to determine the insured's production guarantee for each optional unit.

[1/] "File acceptable production reports," as used above, refers to the most recent APH crop year in the base period. When assigned yields are used for the most recent crop year of the base period, optional unit provisions DO NOT apply for the crop/county.

2 Optional units will be combined at the time of loss adjustment if the insured failed to meet any provision required to qualify for optional units. Basic units cannot be further divided into optional units at the time of loss adjustment nor can further division of optional units occur at loss time.

3 The crop must be planted in a manner that results in a clear and discernable break in the planting pattern at the boundaries of each optional unit unless a written agreement is provided for this purpose by the RMA RO. Planting means the original planting, including any reseeding or replanting. (Cultivating, disking, mowing, etc., between sections, section equivalents, FSA FSNs, irrigated and non-irrigated practices, etc., after planting or harvesting does not qualify the acreage for optional units.)

However, for center pivot irrigation systems only, planting end rows either before or after planting the crop or cultivation, disking, mowing, etc., after the crop was planted between the irrigated acreage and the non-irrigated corners of a center pivot system may be used to establish breaks between irrigated and non-irrigated planting patterns for optional unit purposes. Such breaks will be acceptable only if completed on or before the ARD for the crop and are clearly discernable if a subsequent inspection is required during the crop year (appraisal, claim for indemnity, APH review, etc.). In addition, if irrigated and non-irrigated practices are carried out within a single section, section equivalent, or FSA FSN:

a Proper planting and fertilization practices must be carried out for each respective practice; and

b Records of harvested production must also be maintained separately for each practice.

4 **EXCEPTIONS FOR CROPS REQUIRING PRODUCTION REPORTS (APH RECORDS):**

EXCEPTIONS: Insureds who do not provide production reports for the most recent crop year in the base period may qualify for optional units if either of the following apply:

a The insured is a new producer who has not produced the crop and is not providing records from another person sharing in the crop, and intends to keep separate acreage and production records by practice, type, or variety according to the optional unit division requirements; or

b New land or a new practice (irrigated or non-irrigated), type or variety is added to the operation for the current crop year that meets all optional unit requirements, and the insured:

i has not produced the crop,

ii is not providing records from another person sharing in the crop on that acreage, and

iii intends to keep separate acreage and production records according to optional unit provisions.

Verifiers (as applicable, RMA RO or AIPs) have the option of considering a *bona fide* zero acreage report for a unit as a production report for that unit.

(b) **Separate Optional Units Determined By**:

1 **Section**, for most crops, when the Rectangular Survey System is applicable. For the purpose of the unit structure, a section is defined as a unit of measure under the rectangular survey system describing a tract of land usually one mile square and containing approximately 640 acres. Refer to subparagraph G below.

2 **Section equivalents,** such as Spanish land grants, railroad surveys, leagues, labors, and Virginia Military Lands in the absence of section descriptions. Each section equivalent must contain 640 acres or more. Refer to subparagraph G below.

3 **Separate FSA FSNs**:

a in the absence of sections, section equivalents, or other unit division arrangements approved by FCIC;

b in areas where survey boundaries are not readily discernable;

c in Alabama, Arkansas, Florida, Louisiana, and Mississippi for barley, corn, cotton, grain sorghum, oats, peanuts, rice, rye, soybeans, and wheat. Refer to Exhibits 2, 3, 4, and 5 in the CIH for further explanation and illustrations. The boundaries of the section, section equivalent, or FSA FSN must be easily identifiable by the AIP without using survey instruments or locating survey markers. Refer to subparagraph G below.

4 **Irrigated and non-irrigated practices** within a single section (section equivalent, or FSA FSN) may qualify for separate optional units, provided such division is allowed by the crop policy and all requirements in subparagraph D (2) (a) above are met. For annual crops, this includes the non-irrigated corners of a field in which a center pivot irrigation system is used to irrigate the insured crop.

5 Optional units for acreage under an organic farming practice. In addition to or instead of establishing optional units by section, section equivalent or FSA farm serial number, or irrigated and non-irrigated acreage, separate optional units may be established for acreage of the insured crop grown and insured under an organic farming practice. Certified organic, transitional and buffer zone acreage do not individually qualify as separate units.

(c) **Center pivot irrigation systems for all annual crops for which the crop policy permits unit division for irrigated and non-irrigated practices**.

1 If the crop's planting pattern/rows continue into one or more non-irrigated corners of the field and the portion of the field irrigated by a center pivot irrigation system (circle), the acreage within intersecting lines drawn at right angles to the radius of the center pivot is NOT eligible for a separate optional non-irrigated unit.

(One Unit)

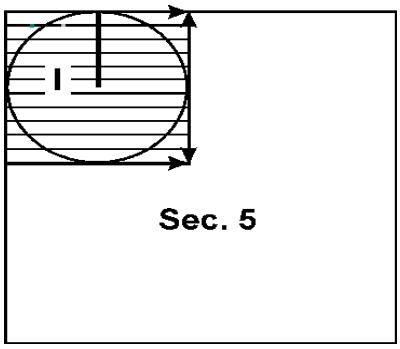

The acres and production from the non-irrigated corners of a field planted to the same insured crop may be included in the irrigated acreage. A separate line entry for a non-irrigated practice is not required on the acreage report for the corners of the field when they are considered to be irrigated. Refer the CIH for further information.

2 If the crop's planting pattern/rows continue between the non-irrigated corners of the field and the portion of the field irrigated by a center pivot irrigation system (circle), but do NOT extend into other non-irrigated acreage in the same section, section equivalent, or FSN; other non-irrigated acreage can qualify as a separate non-irrigated optional unit if the requirements in subparagraph D (2) (a) above are met.

(May qualify for two units.)

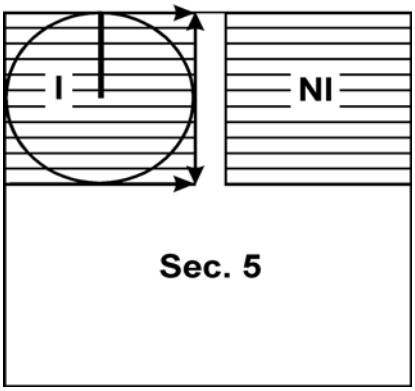

3 If the crop's planting pattern/rows extend beyond intersecting lines drawn at right angles to the radius of a center pivot into other non-irrigated acreage of the crop in the same section, section equivalent, FSN; the insured is not eligible for a non-irrigated optional unit.

(**One Unit)**

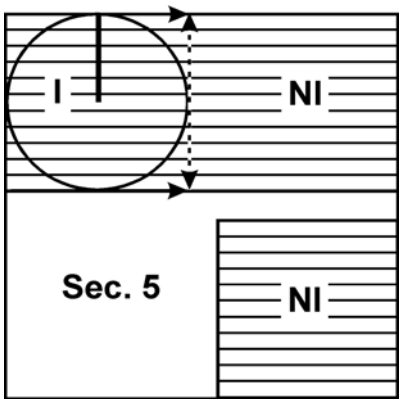

The non-irrigated acreage beyond the intersecting lines will require a separate line entry on the acreage report (will be the same unit number as the irrigated acreage). Any other non-irrigated acreage from other fields in the section (or section equivalent) will also be included in the line entry for non-irrigated acreage. The irrigated acreage is limited to the irrigated circle.

(d) **When Optional Units Are Established**

1 For crops that require production reports and that are eligible for optional units, insureds must qualify for optional units at the time the APH form is completed and signed by the insured. However, insureds may make the final determination of whether optional units or basic units will apply at the time the acreage report is submitted.

2 For all other crops that do not require production reports but are eligible for optional units, optional units are established at the time the acreage report is submitted.

(3) Cranberries

For cranberries, further division of a basic unit is permissible, provided that the requirements in subparagraph D (2) (a) above are met, and that each unit's insured acreage is located in separate tracts of noncontiguous land. "Contiguous Land" may be defined as "any separate tracts of land owned and/or operated by the insured, whose boundaries touch at any point." Land that is separated by a public or private roadway, waterway, or irrigation ditch is considered as contiguous.

(4) For Durum or Club Wheat, further unit division is allowed if the actuarial documents designate durum or club wheat as a separate wheat type.

E Unit Structures for Dry and Contract Seed Beans

(1) **BASIC UNITS**. Acreage planted to dry beans and contract seed beans are separate basic units. For dry beans and contract seed beans, a basic unit is all insurable acreage of dry beans in the county in which the insured has a:

(a) 100 percent share, or

(b) is owned by one entity and operated by another specific entity on a share basis.

(2) **OPTIONAL UNITS**. Basic units determined in subparagraph A above may be further divided into optional units by:

(a) Bean type shown on the SPOIs (dry beans ONLY). For more information see the CIH.

(b) Section, section equivalent, or FSA FSN (dry beans or contract seed beans IF the contract specifies the number of acres under contract).

(c) Irrigated and non-irrigated practices (dry beans or contract seed beans IF the contract specifies the number of acres under contract).

(d) Written Unit Agreement (dry beans or contract seed beans IF the contract specifies the number of acres under contract). Optional units are not available for contract seed beans grown under a seed bean processor contract that specifies ONLY an amount of production.

F Unit Structures for Hybrid Seed Corn and Hybrid Sorghum Seed

Unit division is determined as follows:

(1) Contracts specifying production or production and acres. There will be no more than one basic unit for all production contracted under each processor contract. For example, if an insured has three contracts with the same processor, the insured is eligible for three basic units. Optional units are not applicable.

(2) Contracts stating acreage. Acreage that would otherwise be one basic unit may be divided into optional units provided optional unit qualifications are met (i.e., acreage located in separate, legally identifiable sections, etc.)

Exception: Optional units by irrigated and non-irrigated practices are not applicable to Hybrid Sorghum Seed.

G Written Unit Agreements for Optional Units

(1) Land located in a high-risk area is not eligible for written unit agreements.

(2) Written unit agreements authorized for unit division purposes may be continued in subsequent crop years without re-approval or re-issuance by an AIP. However, written agreements do not transfer to a new AIP and would require a new written agreement be executed through the new AIP.

(3) Each optional unit will be delineated on a map or photo, showing and identifying the boundaries of the optional unit and the sections, section equivalent or FSN and other information needed. The FSN, track, or multi-track and field number for each parcel contained in the optional unit will be noted on a map or photo, GIS maps, other legible map issued by a State or Federal agency. The map or photo will be specifically referenced in the Written Unit Agreement and will be attached to the Agreement. The optional unit will be referenced on the map in a manner that can be easily coordinated with the insured's acreage report.

(4) Loss Adjustment Verification. The adjuster will use the Written Unit Agreement and attached maps and information described in (3) above to verify the insured's qualification for optional units, the location and size of the optional unit(s), and unit production.

(5) Refer to the following sections of the Written Agreement Handbook, FCIC 24020 for information regarding Written Agreements for optional units: Section 5B for oversized sections, section equivalents, and FSNs, Section 5C for annual crops with topographic/irrigation features, Section 5D for perennial (trees, vines, bushes) crops with topographic/irrigation features, and Section 5E for annual crops with geographic dispersion features.

H Unit Division Option

For certain areas of Indiana, Illinois, Ohio, and Texas that have not been surveyed under the U.S. Rectangular Survey System or a similar system allowing for "sections" (640 or more acres), insureds may request this option to aggregate two or more (any shape) legally identifiable parcels of land into section equivalents (containing at least 640 acres).

By doing this, such land will be eligible for optional units, if allowed by the policy provisions. However, the insured must have complied with the production reporting, record, and planting pattern guidelines specified in the applicable crop policy/endorsement or actuarial documents. Even though such land will be eligible for optional units under this option, the insured still has the choice each crop year of insuring each crop(s) under basic unit(s) or optional units. Refer to CIH.

I Enterprise or Whole Farm Units

(1) General Information

(a) Enterprise units (EU) or whole-farm units (WFU) may be requested by the insured (in writing on or before the earliest sales closing date for the crop(s) and county insured) if applicable policy provisions allow for them.

(b) The unit designation remains in effect from year to year unless written notification is provided to the AIP by the earliest sales closing date for the crop year for which the insured wishes to change this election.

(2) Enterprise Unit (EU) Determination

(a) **An EU, as defined in the Enterprise Unit Amendment for the CCIP Basic Provisions**, consists of all insurable acreage of the insured crop in the county in which the insured has a share on the date coverage begins for the crop year.

1 To qualify an EU must contain all of the insurable acreage of the same insured crop in:

a One or more basic units that are located in two or more separate sections, section equivalents, FSA FSNs, or units established by written agreement; or

b Two or more optional units that are located in two or more separate sections, section equivalents, FSA FSNs, or units as established by written agreement.

2 At least two of the sections, section equivalents, FSA FSNs, or units established by written agreement making up the basic or optional units in (a) 1 above must have planted acreage that constitutes at least the lesser of 20 acres or 20 percent of the insured crop acreage in the enterprise unit.

(b) **An EU, as defined in the Enterprise Unit Amendment for the RA Basic Provisions**, consists of all insurable acreage of the insured crop in the county in which the insured has a share on the date coverage begins for the crop year.

1 To qualify, an EU must contain all of the insurable planted acreage of the same insured crop in:

a One or more basic units that are located in two or more separate sections, section equivalents, or FSA FSNs; or

b Two or more optional units established by separate sections, section equivalents, or FSA FSNs; and

2 At least two of the sections, section equivalents or FSA FSNs, making up the basic or optional unit in section 2 (c) (1) of the RA Basic Provisions must each have planted acreage that constitutes at least the lesser of 20 acres or 20 percent of the insured crop acreage in the enterprise unit.

3 In counties with both winter and spring wheat types, an insured may have separate enterprise units for winter wheat and spring wheat types, if all other qualifications are met. Under RA, an insured is not allowed to combine winter and spring wheat units to meet the enterprise unit requirements.

(c) **An EU, as defined in the Enterprise Unit Amendment for the CRC Basic Provisions**, must contain 50 or more acres and at least two of the sections, section equivalents, FSA FSNs, or units established by written agreement making up the basic or optional units in section 2 (c) (2) of the CRC Basic Provisions must each have planted acreage that constitutes at least the lesser of 20 acres or 20 percent of the insured crop acreage in the enterprise unit.

1 The acreage that comprises the enterprise unit must also qualify:

a For two or more basic units of the same insured crop as defined in section (2) (a) of the CRC Basic Provisions that are located in two or more separate sections, section equivalents, FSA FSNs, or units established by written agreement; or

b For two or more optional units of the same insured crop established by separate sections, section equivalents, FSA FSNs, or as established by written agreement.

(d) For crops under the CCIP, RA, or CRC Basic Provisions, the insured may select the EU structure for one crop/county and basic/optional units for other crops/counties.

(e) Although the insured must have insurable acreage of the same crop for the current crop year and request the enterprise unit structure by the earliest applicable sales closing date, qualification for the EU will be determined at acreage reporting time when the insured reports all insurable acreage of the insured crop in the county for all basic and/or optional units comprising the EU. Once elected and qualified, an EU may not be further divided except
*** as specified in the individual policy.

*** (f) Any unit premium discount contained in the actuarial documents will apply to both planted and prevented planting acreage in the EU.

(g) At any time the AIP determines the insured does not qualify for an EU

1 For crops insured under CCIP and CRC Basic Provisions, a basic unit structure will be assigned.

2 For crops insured under RA, optional units or basic units will be determined based on the insured's production report.

(h) A five-position unit number and abbreviation (EU) will be used. The unit designation is shown as 00100EU on the acreage report. (Unless the AIP specifies otherwise, do not show EU with the unit number on the claim form.)

(i) Maintaining Production Records Under an EU

1 An insured who meets the requirements for an EU under the plan of insurance chosen does not have to report or maintain separate production records for each basic or optional unit that comprise the EU for the most recent crop year. Insureds are required to report and maintain total acreage and production for the insured crop by practice, type, and variety, as applicable.

2 Although as stated in 1 above, insureds are not required to maintain separate production records for each basic or optional unit that comprise the EU, they may do so if they choose. If the insured chooses to provide separate acreage and production reports that would qualify for separate basic or optional units, AIPs must maintain separate APH databases accordingly within an EU.

(3) Whole-farm Unit (WFU) Determination

(a) A WFU structure is available for crops insured under the CCIP if shown in the SPOIs. For crops insured under RA Basic Provisions, a WFU is available per the RA Basic Provisions.

(b) To qualify, a WFU must consist of all insurable acreage of two or more insured crops (for RA, the insured must qualify for at least two enterprise units) planted in the county in which the insured has a share on the date coverage begins for each crop for the crop year.

(c) If the insured selects a WFU structure:

1 No other unit structure can be selected for the county. (Different unit structures may be selected for other counties insured.)

2 The insured will be required to pay a separate administrative fee for each crop included in the WFU.

(d) All crops for which the WFU structure is available must be included in the WFU.

(e) At least two of the insured crops must each constitute at least 10 percent of the total liability of all insured crops in the WFU, and all crops in the unit must be insured under the same insurance plan and with the same AIP.

(f) A WFU will be determined when the acreage is reported, but at any time the AIP determines the insured does not qualify for a WFU:

1 For crops insured under the CCIP, the Basic unit structure will be assigned.

2 For crops insured under RA, optional units or basic units will be determined based on the insured's production report.

(g) A five-position unit number and WFU abbreviation (WU) will be used. The unit designation is shown as 00100WU on the acreage report. (Unless the AIP specifies otherwise, do not show WU with the unit number on the claim form.)

(h) Acreage for each optional or basic unit for each crop produced in the county that comprises the WFU must be reported on the acreage report.

(i) Although multiple crops are insured in a WFU, except for winter wheat, the insured will be required to pay administrative fees for each crop included in the WFU.

SECTION 11 USDA FARM PROGRAM COMPLIANCE

56 CONTROLLED SUBSTANCE VIOLATION

Under the Food Security Act of 1985, any person who is convicted under Federal or state law of planting, cultivating, growing, producing, harvesting, or storing a controlled substance in any crop year will be ineligible for USDA benefits, including crop insurance for 5 years. The 5 years begins with the crop year in which the person is convicted of a controlled substance violation.

SECTION 12 HAZARDS CONNECTED WITH PESTICIDES OR OTHER CHEMICAL SUBSTANCES

57 PESTICIDE OR OTHER CHEMICAL SUBSTANCE HAZARDS

A General Information. Most pesticides have a period of time that must lapse after they have been applied before it is safe to enter the treated field without wearing protective clothing and equipment. Normally, this is at least the time necessary for sprays to dry and dusts to settle (8-48 hours). Material Safety Data Sheets (MSDS) contain pertinent detailed information about specific chemicals including health hazards, emergency and first-aid, and the safe re-entry period after a chemical has been applied. Some USDA field offices such as FSA and NRCS house MSDSs. Other local agencies may have these data sheets for possible use. In addition, each state has a poison control center, which normally carries a toll-free number and maintains a 24-hour consultant service in the diagnosis and treatment of human illnesses resulting from toxic substances. Check with NRCS or FSA for MSDSs or other literature pertaining to pesticide or chemical hazards.

B Prior to Inspection. At the time the appointment is set up, ask the insured or the insured's representative if the field, orchard, or vineyard to be entered has been treated with pesticides or other chemicals. If the field, orchard, or vineyard is to be treated or has been treated within this time period, reschedule the appointment(s) and document the visit accordingly.

SECTION 13 FSA OFFICE

58 FSA INFORMATION

A General Information. Although insured producers are not required to certify acreage to FSA, AIPs may use certain information or documents from the FSA office as one option to verify and/or determine data for loss adjustment inspections if it has not already been done by a previous inspection for the crop year.

B FSA Responsibilities for Releasing Producer Information

(1) FSA offices are required to ensure that anyone requesting information on another person is authorized.

(2) FSA will not release documents to adjusters, AIP employees, or RMA employees unless they can provide proof that they are authorized to access the producer's

records. The adjuster, AIP employees, or RMA employees should start by identifying themselves to FSA and stating the AIP that the adjuster or AIP employee is representing. They must provide FSA with at least one of the items listed in (3) below:

(3) **Acceptable proof includes one or more of the following for the current crop year**:

(a) A producer-signed form (meeting FCIC-form standards) showing request for cancellation and transfer of the insured's MPCI insurance to the AIP for which you are working;

(b) A claim form completed or partially completed indicating loss adjustment work will be performed for the producer;

(c) Summary of Insurance Protection (or Schedule of Insurance);

(d) Notice of Acceptance; and

(e) Notice of Damage or Loss;

(4) FSA may require AIP employees who are NOT officially titled a loss adjuster to provide some type of proof that shows the AIP employee is authorized to perform loss adjustment activities, quality control, or compliance-related activities (with or without a loss notice being filed) for the AIP and may be asked to provide some type of documents/printouts showing the producer is insured with the AIP being represented. Likewise, FSA may require RMA employees to provide a document/card that authorizes the employee to be involved in compliance-related activities for RMA.

59 INFORMATION REQUESTS TO FSA

A General Information

(1) The following information applies only to requests for carrying out loss adjustment activities and related compliance activities.

(2) **Do not make requests on the FSA-426-A** for normal loss adjustment activities and compliance-related activities. Refer to FCIC Program Integrity Handbook (4-RM) for requests that are in conjunction with discrepancy reviews assigned by RMA, and suspected program abuse, misuse, or fraud reviews that have been assigned to the AIP by the RMA compliance office.

(3) FSA will NOT honor requests for information from adjuster's, AIP employees, or RMA employees carrying out loss adjustment activities unless a notice of damage or loss has been filed or they can provide evidence to FSA that they are authorized to be involved in quality adjustment activities or compliance activities for producers who have not filed a notice of damage or loss; e.g., Acreage Report Reviews, Growing Season Reviews, APH reviews, etc. Refer to 58 B (4) above.

(4) FSA information provided to adjusters, AIP employees, or RMA employees carrying out loss adjustment, quality control, or compliance-related activities shall

be used solely for the purpose of completing loss adjustment, quality control, or compliance related activities.

B Requesting Information on the FSA-426

FSA offices require that requests are made on an FSA-426, MPCI/FCIC Information Request Worksheet (Exhibit 7). The FSA-426 is a self-explanatory form that was designed to provide uniformity for processing crop insurance information and as a measurement tool to record the number of requests.

(1) FSA will not accept requests on AIP-created request forms.

(2) If adjusters, AIP employees, or RMA employees who are involved in loss adjustment, quality control, or compliance-related activities are requesting documents for previous crop years, the years for which the information is requested MUST be noted in the remarks section of the FSA-426.

(3) FSA requires that item 6 of the FSA-426 be completed with ONLY the last 4 digits of the producer's tax ID number.

(4) FSA offices have been instructed to strikeout (black out) any personal information that does not apply to the specific producer identified on the FSA-426.

C How and When the FSA-426 should be submitted

The FSA-426 may be mailed, faxed, or submitted in person. Most FSA offices will require that the FSA-426 be submitted in advance of filling the request. Because of this, it is best to submit the request as soon as possible after receiving the notice of damage.

D Who submits the FSA-426

ONLY the adjuster, AIP claim's supervisor, or RMA employee may submit the FSA-426. Agents CANNOT submit requests on the FSA-426 nor can they obtain requests for the purpose of loss adjustment activities.

E Untimely Filled Requests or Refusal to Fill Requests

FSA offices in most cases will have the request filled within *3* workdays of the receipt of the request. If an FSA office continually takes longer than this, or if an FSA office refuses to fill properly completed and filed requests for insureds' FSA-426s made by the AIP adjusters, loss adjustment or quality control personnel for the reasons outlined in PAR. 59, notify the AIP. The AIP will then notify Insurance Services of the situation. Insurance Services will then coordinate with FSA to resolve the problem.

60 OBTAINING THE REQUESTED DOCUMENTS FROM FSA

Requested documents are obtained in the following ways:

A The FSA county office may mail or fax the documents requested on the FSA-426 to the adjuster, authorized AIP employee or RMA employee; HOWEVER, the adjuster, AIP employee, or RMA employee MUST request that the information is mailed or faxed; or

B The adjuster, AIP or RMA employee may pick the documents up at the applicable FSA county office. To avoid delays in obtaining copies, the adjuster AIP or RMA employee ill work with FSA county office personnel during busy periods, program sign-up, etc., to determine the best times to come into the office to obtain the forms and aerial photographs.

61 VERIFICATION MATERIALS/INFORMATION

A Materials/Information. If available, the following FSA office material and information can be used to verify data and to make determinations.

(1) Aerial photographs and other required forms or data.

(2) Existing acreage figures.

(a) Identification of permanent fields.

(b) FSA measurements which the insured obtained through FSA-measurement service. (Measurements may be used as "Determined Acres" for loss adjustment purposes as outlined in PAR. 80.)

(c) Identification and measurements obtained from large-scale aerial photographs. Refer to PAR. 80 regarding "Determined Acres."

(d) Cropland acres from the FSA-578 (Producer Print) to use in calculating eligible prevented planted acreage. Refer to the prevented-planting procedures in the Prevented Planting Handbook.

(3) Insured's entity recorded with FSA to compare against entity recorded with the AIP for crop insurance purposes. (The entities should agree; if they do not, further research is needed to establish the correct entity.) Also refer to PAR. 14.

(4) Insured's share reported on the FSA-578 (Producer Print) (used to compare with share reported to the AIP for insurance purposes). Refer to PAR. 13.

(5) The FSN and/or legal description of land (used to compare FSN and legal descriptions recorded on the insured's acreage report and any other crop insurance document where it is pertinent, such as APH forms, etc).

(6) Any other information that may be helpful or is needed or required in procedures for determinations or verification purposes.

PART 3 ON-THE-FARM INSPECTION

SECTION 1 TYPES OF INSPECTIONS

62 GENERAL INFORMATION

All inspections will fall into one of three types: (1) Indemnity Inspections (including Prevented Planting Payment Inspection), (2) Replant Payment Inspections, and (3) Special Contract Services Inspections, such as Crop Inspections, Growing Season Inspections, etc.

63 INDEMNITY INSPECTION - PRELIMINARY

A When Required

(1) Preliminary inspections are required when insureds give notice of damage before the time of harvest to: (1) replant, (2) obtain consent to put acreage to another use, (3) abandon the crop, or (4) destroy any of the insured crop that is not harvested. Unless specified otherwise in these procedures, policy provisions, or SPOIs, the AIP must provide **written consent** (not verbal) to the insured when releasing acreage for any of the aforementioned actions. If the insured takes any of these actions prior to the date the AIP released the acreage, the acreage is **considered destroyed without consent except as allowed for replanted acreage as outlined in PAR. 65 H (3).**

(2) The insured and the adjuster's signature shown on a completed appraisal worksheet and Production Worksheet as the result of the Preliminary Inspection or Final Inspection is considered the AIP's written consent to the insured. The date of verbal consent, if allowed by these procedures, must be documented and filed in the insured's loss file. **Be aware that:**

B Written consent must not be given until the AIP is satisfied:

(1) It is no longer practical to replant to the same initially planted crop when consent is being given to go to another crop and to finalize the claim. **AIPs must be cautious about prematurely releasing acreage to go to a second crop, especially in situations where there is a lighter stand, there are dry soil conditions, there is the possibility that precipitation may occur or there is sufficient time to produce a crop before the calendar date for the EOIP.** Winter and spring types are considered the same crop - see exception for spring crop planted in counties having only winter types in PAR. 65 D. Refer to PAR. 65 B for definition for "Practical to Replant" and for crop policy/provisions requiring processor contracts.

(2) It is possible to make an accurate appraisal of potential production. Certain types of damage or conditions require delays in appraisals; e.g. frost, freeze, hail, crop is still in dormancy, etc. Refer to PAR.'s 85 and 88 for details. Appraisals must represent the maximum potential production that could be expected with normal weather conditions and proper crop care from the time of the appraisal through the completion of harvest.

C Written Consent Provided To Destroy; Put to Another Use or Crop; or Abandon; but Insured Does Not Do So

(1) When the AIP has given written consent to destroy the unharvested acreage, put the acreage to another use or crop, or abandon the acreage, and the insured has not done so, the following applies:

(For acreage released for replanting that the insured has not replanted, refer to PAR. 65 K.)

(a) If the insured continues to care for such acreage and such acreage is harvested, the AIP will use the harvested production.

(b) The acreage can be re-appraised if harvest becomes general in the county (area) or additional damage occurs.

(c) For some crops, such as table grapes, the crop provisions indicate that the insured must not destroy the damaged crop (or take it to another use) until the EARLIER of 15 days from the date the insured gave notice or the AIP gives written consent to do so. For this reason AIPs should make every effort to inspect and appraise the potential production within 15 days of the insured's notice of loss. Refer to the applicable crop provisions.

(2) During the preliminary inspection inform the insured that:

(a) If acreage is put to another use without written consent, an appraisal will be assigned for such acreage of not less than the amount of the production guarantee. This may result in no indemnities being paid, but premium will be charged.

(b) When prior written consent is given and the acreage is not put to another use before harvest, or the acreage is harvested, the indemnity will be determined without regard to the written consent or appraisal made. **(Replanting to the same crop under any practice is not putting the acreage to another use or a second crop except as stated in PAR. 65 D or PAR. 65 G.)**

D Claim Completion Instructions. Refer to individual crop handbooks for completion instructions for a preliminary claim for indemnity.

E Prevented Planting or Late Planting Instructions. For specific instructions regarding preliminary inspections involving late planted acreage refer to PART 5 of this handbook. For specific instructions regarding prevented planting acreage, refer to the Prevented Planting Handbook.

64 REPLANT PAYMENT INSPECTION ***

A General Information

(1) There are two types of replant inspections, on-the-farm replant inspections and self-certification replant inspections. At the discretion of the AIP, the self-certification replant inspection may be used for certain crops with 50 gross acres (before share) per unit or less to be replanted. The self-certification replant program provides an insured with consent to replant and allows the AIP to

complete replanting payment claims without the adjuster making a Replant Payment Inspection. If there is any reason to suspect that the insured will misrepresent information regarding the replanting claim, an on-the-farm replant inspection should be conducted.

(2) For specific replanting questions general to replanting requirements (also includes crops to which a replanting payment is not applicable) refer to PAR. 65.

B On-the-Farm Replant Inspection

(1) The AIP, upon receiving the notice of damage, will assign the claim as a Preliminary Inspection. The adjuster will determine at the time of inspection if it is a final inspection.

(2) The adjuster upon field inspection will determine if the unit qualifies for a replanting payment based on the provisions of the individual crop policy or endorsement.

(3) Refer to individual crop handbooks for completion instructions for preliminary and final replant claims.

(4) Decisions regarding whether or not the unit qualifies for a replant payment will be made on the basis of:

(a) The Date of the Initial Planting

1 Crop acreage planted earlier than the Earliest Planting Date specified in the SPOIs for the applicable crop and county is not eligible for a replanting payment. However, if acreage is replanted after the Earliest Planting Date, and then this acreage is replanted a second time, the acreage replanted a second time may be eligible for a replant payment.

2 If an Earliest Planting Date for the crop/county is not listed in the SPOIs, the Earliest Planting Date provision is not applicable.

(b) The Acreage Damaged

1 The acreage to be replanted must be at least the lesser of 20 acres or 20 percent of the insured planted acreage for the unit as determined on the final planting date or within the late planting period if a late planting period is applicable. (This is not applicable to forage seeding.)

a Acreage planted after the final planting date for crops not having late planting periods or after the late planting period for crops having late planting periods, will not be considered in determining the 20 acres or 20 percent of insured planted acres to qualify for a replanting payment.

b For Enterprise and Whole Farm Units, the 20 acres/20 percent rule applies to the total acreage for the damaged crop (e.g., corn) in the Enterprise or Whole Farm Unit.

2 If this determination cannot be made because additional insured acreage on the unit is to be planted and the minimum may not be met, consent to replant may be given, but the replant claim is to be handled as a preliminary replant inspection as instructed in the appropriate crop handbook and below.

3 A previous replanting payment must not have been made on the same acreage for the same crop year.

(c) An appraisal of potential production. Except for canola/rapeseed, to qualify for a replant payment, the appraised potential production cannot exceed the amount stated in the crop policy. Refer to the individual crop provisions for specific amount. If crop damage is due to hail, blowing sandy soils, frost, or freeze, the appraisal must be deferred as stated in PAR. 85 C.

(5) Replanting payments do not apply to crops insured under the Small Grains Crop Provisions that have been initially planted to a winter type of the insured crop (including rye) in any county for which the SPOIs has **ONLY** a fall final planting date (including final planting dates in December, January, and February.)

(6) If the unit qualifies for a replant payment, the notice will be changed from a preliminary notice to a FINAL notice (Final replant claim) utilizing a Certification Form (Exhibit 11).

(7) An acreage report must be submitted with the final replant claim, if not previously submitted. If the acreage report is revised for the replant units after submission of a replanting payment (final) claim, a corrected claim must be submitted with the revised acreage report.

(8) A Certification Form cannot be accepted until the ENTIRE unit has been INITIALLY PLANTED. The adjuster must have the completed Certification Form (by personal contact or otherwise) prior to signing the claim form.

(9) Certification Form spot-checks should be conducted regularly by the adjuster. The AIP will determine the number of reviews to be conducted. Any questionable Certification Form should always be reviewed.

(10) If the unit did not qualify for a replant payment but later has a routine final claim filed, the original preliminary inspection entries should be reviewed and corrected as necessary.

(11) Unless specified otherwise in the individual crop provisions or SPOIs (Small Grains Crop Provisions specify otherwise), replant payments will be based on the insured's actual cost per acre not to exceed the amount specified by the individual crop policy, endorsement, or crop provisions.

(a) Some crop provisions for APH plans allow that if more than one person insures the same crop on a share basis with the same AIP, a replanting payment based on the total shares insured by the AIP may be made to the insured person who incurs the total cost of replanting. CRC and RA plans of insurance do not contain this same language. Payment will be made in this manner only if an agreement exists between the insured person(s), and such agreement requires one person to incur the entire cost of replanting or

gives the right to all replanting payments to one person. The person who incurs the cost of the replanting has to be insured under the APH plan of insurance.

EXAMPLE:

There are three parties sharing in the crop. Each insured has one-third share in the crop. There has been 80 acres replanted. Insured A and B have additional coverage with insured A having a $5 price election and insured B having a $3.75 price election. Insured C has CAT coverage. Insured A incurs the total replant costs and there is an agreement between all parties for insured A to receive a replanting payment based on the total shares. If, in accordance with the replant provisions for the crop, the maximum amount that each individual can receive is as follows:

Insured A: 8 bu. X $5 price election X 80 acres X .333 share =$1065.60 (rounded to $1066.00)

Insured B: 8 bu. X $3.75 price election X 80 acres X .333 share = $799.20 (rounded to $799.00)

Insured C: $0.00. No payment is allowed on insured C's share since replant payments are excluded from CAT coverage

The maximum replant payment that insured A is entitled to receive is $1865.00 ($1066.00 + $799.00 + $0.00).

(b) **Shareholders with APH and CRC/RA**

While the policy provision requires both the person who is giving away their share of the replanting payment and the person who incurred all the replanting costs to be insured with the same AIP, there is no policy provision in the APH plan policies that says the person who is giving away their share of the replanting payment has to be insured under the APH plan of insurance. Therefore, if you have a tenant (who incurred 100% of the replanting costs) insured under the APH plan, and you also have the landlord insured under a CRC or RA plan of insurance, if both parties agreed to the tenant receiving 100% of the replanting payment, the tenant could receive 100 percent of the replanting payment under his/her APH policy. However, the reverse would NOT be true. A CRC or RA tenant who incurred the total cost of replanting could not receive more than their share insured under those plans of insurance because those policies do not provide authority to receive a replanting payment based on more than their insured share.

(12) If the insured replants the acreage to a different planting practice, the crop will continue to be insured under the practice originally planted and reported even when the crop is replanted by a practice that was uninsurable as an original planting. (This is not applicable to such practices as irrigated, non-irrigated, staked tomatoes, ground tomatoes, etc.; they are considered **production** practices rather than **planting** practices. This is also not applicable to skip-row planting patterns for cotton.) If the insured files a claim for indemnity, the practice originally reported will be entered in the appropriate column for practice on the claim form, and the replanted practice will be documented in the narrative.

(13) Some crop provisions have a liability limitation when the crop is replanted by a practice that was uninsurable as an original planting. Specific claim preparation instructions will be found in the applicable crop handbooks.

(14) If the crop is replanted to a different type than initially planted, the acreage report must be revised to the new type and amount of acres replanted. Replant payments will be based on the new type replanted, unless specified otherwise in the crop provisions or SPOIs.

(15) Replanting payments will be calculated using the price election and production guarantee for the crop type that is replanted and insured, unless specified otherwise in the crop provisions or SPOIs. For example**:** The Small Grains Crop Provisions indicates: A replanting payment will be based on the guarantee and price election for the crop type initially planted when: (1) A damaged winter crop type is replanted to a spring crop type, and retains insurance based on the winter crop type guarantee and price election, and (2) Acreage replanted at a reduced seeding rate into a partially damaged stand of the insured crop.

(16) When acreage being claimed for a replant payment was initially timely planted (after the earliest planting date (if applicable) and before the final planting date) and then is replanted during the late planting period, the timely-planted guarantee will apply to the replanted acreage and will be used to determine the replant payment. If the acreage being claimed for a replant payment was initially planted in the late planting period, then the initial late planting guarantee would be used to determine the replant payment.

C <u>Self-Certification Replant Inspections</u>

(1) General Information

(a) If authorized by the AIP, the self-certification replant inspection can be used on the following crops provided replanted acreage will be 50 gross acres (before share) or less on a unit and the unit acreage qualifies for a replanting payment in accordance with policy/endorsement replanting provisions. **Authorized crops: barley (spring-seeded only), corn, dry beans, flax (spring-seeded only), grain sorghum, oats (spring-seeded only), popcorn, peanuts, soybeans, sugar beets, sunflower seed, and spring wheat (if replant payment allowed by crop provisions and/or effective endorsement).**

(b) No provisions of the contract are waived. As outlined below, the Self-Certification Replant Worksheet (Exhibit 12) will be used in lieu of the on-the-farm-visit and in place of the Certification Form. The APPROVED Self-Certification Replant Worksheet constitutes the AIP's determination that all replanting payment requirements are considered to have been met.

(c) To claim a replanting payment, the insured must give notice of damage to his/her AIP prior to obtaining consent to replant without an inspection. (The agent CANNOT give consent to replant without an inspection.) The AIP upon receiving the notice of damage will prepare the claim form as a Preliminary Notice.

(d) A Self-Certification Replant Worksheet is mailed to the insured when AIP consent is given to replant. A form letter provided by the AIP, which highlights the insured's requirements, will be attached to the worksheet.

(2) Prior to mailing the Self-Certification Replant Worksheet to the insured, the adjuster will:

(a) Contact the insured to determine if the insured's damaged acreage to be replanted is 50 gross acres or less per unit and if the unit acreage will qualify for a replanting payment.

1 Unit replanting acreage qualifications are based on the same qualifications as in subparagraph B (4) (a)-(c) above.

2 If this determination cannot be made because additional insured acreage on the unit is to be planted and the minimum may not be met, consent to replant may be given, but handle as a preliminary replant inspection with an on-the-farm visit.

3 Refer to subparagraph B (8) and (10) above if the unit does not qualify for a replanting payment at this time.

4 Damaged acreage appraisals will be based on the insured's judgment that the potential production from the damaged acreage will not exceed the amount stated in the applicable policy. Obtain the insured's estimated yield per acre to determine this, and enter in item 18 of the worksheet. If the damage is due to hail, blowing sandy soils, frost or freeze, the insured must defer making estimate of yields for the length of time stated in PAR. 85 C and AIPs must not approve release of acreage to replant until this time has elapsed. The insured must certify to this information by completing and signing the worksheet.

(b) Complete as many items as possible from information obtained from the insured's file folder information and/or from the insured. Circle the uncompleted items that are to be completed by the insured. (Completion instructions are included in Exhibit 12.)

(3) The insured is to be advised:

(a) To review the Self-Certification Replant Worksheet items completed by the adjuster, line through any incorrect information, insert the correct information, and initial any changes;

(b) To complete the circled uncompleted items on the worksheet (upon replanting the acreage), sign and date, and immediately return the completed worksheet to the person/office instructed by the AIP;

(c) To submit a copy of receipts to support his/her actual replanting cost (not applicable to support replanting costs insured under Small Grains Crop Provisions but is required to verify that the crop was replanted);

(d) That further notification is required if additional acreage will need to be replanted;

(e) An adjuster must make an on-the-farm inspection and appraisal any time the total (cumulative) replanting payment acreage will exceed 50 gross acres for a unit;

(f) That the acreage replanted in EXCESS of 50 gross acres for a unit WITHOUT the adjuster making an on-the-farm inspection and crop appraisal, WILL NOT be eligible for a replanting payment;

(g) That a random review will be conducted on self-certification replants;

(h) That the replant payment cannot be processed until ALL acreage for the unit has been planted, and the insured reports the unit acreage to his/her agent; and

(i) That it is the insured's responsibility to report ALL other acreage planted for all insured crops to his/her agent prior to the ARD for the crop and county.

(4) A Self-Certification Replant Worksheet cannot be approved until the entire unit has been initially planted.

(5) The adjuster (or other authorized employee) will review the insured's completed worksheet and attached receipts to verify eligibility for a replanting payment in accordance with policy/endorsement provisions (refer to subparagraph B (4) above and B (7)-(8) and any procedural restrictions for self-certification before signing and dating the completed worksheet.

(6) For the applicable replant unit(s), compare the reported acres, practice, etc., shown on the acreage report against the acres, practice, etc., shown on the replant worksheet.

(a) If there is a discrepancy in acres and/or practice, which would result in a lower premium when the replant claim is processed, contact the insured to clear up the discrepancy or make an on-the-farm visit to determine the acres and/or practice. If an on-the-farm-visit is not made, the insured must be in agreement with the reduction in premium as a result of the reduced acres or different practice. If it is before the ARD, the acreage report can be revised by the insured without the AIP's approval.

(b) The insured should understand that if the liability is reduced as a result of the information on the replant worksheet and the acres/practice determined at final loss time results in a greater liability than the unit liability established by the insured on the replant worksheet, the unit liability at time of final loss will be held to the unit liability reported for the replant claim. Any production from any under reported and/or unreported acreage will count against the adjusted guarantee and a MIF may apply.

(7) If an initial acreage report has not been previously submitted and processed by the AIP, it must be submitted and processed before the replant claim can be processed.

(8) If the acreage report HAS NOT been received by the agent by the ARD, but the Self Certification Replant Worksheet was received prior to that date; the acreage on the replant worksheet will be considered the timely reported acres for the crop. Contact the insured and do a field inspection.

(a) Determine all insured and uninsured acreage for the unit(s) for which a replant payment has been claimed, and prepare an acreage report accordingly.

(b) Any insurable acreage not reported on the replant worksheet at this time is considered late filed and will require a crop inspection to determine if such acreage will be accepted or rejected, as outlined in PAR. 74.

If crops other than the crop reported on the worksheet has not been reported by the final ARD, the AIP will determine whether the inspection will include determinations for a late-filed acreage report for the unreported crop(s). For example, the acreage reported on the Self-Certification Replant Worksheet was for soybeans; however, the insured has a policy for corn and grain sorghum but failed to timely report the acres for these two crops.

(9) If the acreage report is revised after submission of a replanting payment (final) claim, a corrected claim must be submitted with the revised acreage report if it affects the replant unit.

(10) After confirming that the insured acreage for the unit is eligible for a replanting payment, and any discrepancy on the acreage report and replant worksheet have been resolved:

(a) Change the notice from a Preliminary to a Final Replant Claim.

(b) Transfer the information from the worksheet to the claim form in accordance with completion instructions in the crop handbook for replanting payments, with the exception of obtaining the insured's signature. Enter "See attached" on the line for the insured's signature, and enter the same date the insured signed the worksheet.

(c) Attach the worksheet original and receipts to the AIP's copy of the claim form.

(d) Attach a copy of the worksheet to the insured's copy of the claim form.

(11) If there is any reason to suspect misrepresentation by the insured for this type of inspection, do not allow the insured to self-certify a replant claim. An actual field inspection must be completed in this type of situation.

D Replant Payments Offsetting Amounts Due

Replant payments are not to be used to offset amounts due (i.e., premium, interest, or overpayments), unless the insured agrees to this.

65 REPLANTING PROVISION ISSUES

This section applies to crop provisions that have replanting provisions regardless of whether the crop provisions also include replanting payment provisions.

A When an Insured Must Replant (Annual Crops)

The section in the Basic Provisions entitled Insurable Acreage provides that when the crop is damaged and it is "Practical to Replant," the crop must be replanted in order to

maintain insurability. Therefore, acreage damaged after the final planting date must not be released for other use UNTIL it is no longer practical to replant.

B Practical To Replant

(1) The definition of Practical to Replant in the Basic Provisions is as follows:

"The AIPs determination after loss or damage to the insured crop based on all factors, including, but not limited to moisture availability, marketing window, condition of the field, and time to crop maturity, that replanting the insured crop will allow the crop to attain crop maturity prior to the calendar date for the EOIP. It will be considered to be practical to replant regardless of availability of seed or plants or the input costs necessary to produce the insured crop such as those that would be incurred for seed or plants, or irrigation water."

(2) In regard to the definition of Practical to Replant in (1) above:

Some crop provisions may provide additional or modified requirements/factors in order for it to be considered "practical to replant," such as, availability of seeds or plants. Refer to some examples in item (3) below.

(a) Irrigation water is from sources (reservoirs, etc.) historically obtained by the insured. (If water is only available from non-traditional sources and cost is excessive, replanting may not be practical.)

(b) The specific crop provisions or SPOIs may have different provisions regarding “practical to replant."

(3) **EXAMPLES:**

Example 1:

Some crop provisions, for which processor or seed contracts apply, contain language stating that it is not practical to replant if the production from the replanted acreage cannot be delivered under the terms of the contract or the processor/seed contractor does not agree in writing to accept the production from the replanted acreage. Some crop provisions for which processor contracts apply, state it is not practical to replant if the replanted acreage cannot produce at least the specified percentage of the approved yield and the processor agrees in writing to accept the production from the replanted acreage (e.g., processing sweet corn, processing beans, processing tomatoes, and green peas).

Example 2:

The Sugar Beet Crop Provisions state it will not be considered practical to replant 30 days after the initial planting date for all counties where a late planting period is not applicable unless replanting is generally occurring in the area.

C Replanting to a different practice, type, or variety is not planting to another crop, unless the actuarial distinguishes the type or variety as a different crop, except as stated in (D) below.

D Spring Wheat Replanted In Counties Having Only Fall Planting Dates

If the insured's planted winter wheat is damaged to the point there is a loss situation and the insured wishes to plant the winter wheat acreage to a spring variety, the claim will be finalized based on the AIP's appraisal of the winter wheat crop. The spring-planted variety would not be considered replanted to the first crop (wheat). It would be considered an uninsurable second crop since spring wheat is not insurable in these counties. HOWEVER, if the insured inter-seeds the spring variety into the existing winter variety, DO NOT finalize the claim. The winter wheat will continue to be insured. Refer to subparagraph J below.

E Replant Provision/Herbicide Usage

(1) When an herbicide has been properly applied as a recommended farming practice, and the label restrictions prohibit replanting the crop by the final planting date, it will generally be considered not practical to replant the acreage. The individual circumstances should be documented using label restrictions and local CES information to make individual determinations.

(2) Advise the insureds that to protect their interest in determining it is not practical to replant they should notify the AIP of the circumstances in order to provide timely documentation of the facts.

(3) No standard response can be given as to the practicality to replant in this situation. Every case may have varied conditions that will affect the decision. Included in these conditions are the following:

(a) Label restrictions for herbicide used;

(b) Crop variety;

(c) Planting date;

(d) Soil, moisture, and temperature conditions; and

(e) Stage of plant growth;

F When It Is Practical to Replant

If the AIP determines it is practical to replant any acreage (subparagraphs A-E above), it *** cannot be released to go to another crop. If the insured does not replant or plants another crop; the AIP:

(1) WILL NOT pay an indemnity on such acreage; and

(2) WILL revise the acreage report to remove such acreage and the acreage must be designated as uninsurable in the "remarks" section of the acreage report.

G When the AIP Determines It Is (Was) Not PRACTICAL to Replant

(1) **AIPs must be cautious to not prematurely determine that it is not** practical to replant**,** especially in situations where there is a lighter stand, dry soil conditions, and the possibility that precipitation may occur or there is sufficient time to produce a crop before the calendar date for the EOIP.

(2) **Insured notifies AIP of intent to replant, but the AIP determines it is NOT PRACTICAL TO REPLANT**

(a) During the farm visit, appraise the acreage. Inform the insured that it is not practical to replant the crop (subparagraph B above), but the AIP will release the acreage for ANOTHER USE if the insured desires. **(Replanting to the same crop under any practice is not putting the acreage to another use and is not considered a second crop except as stated in PAR. 65 D or UNLESS the AIP determines it is NOT PRACTICAL TO REPLANT).**

(b) If the entire unit acreage is damaged and the AIP determines it is NOT PRACTICAL TO REPLANT, the claim can be finalized AFTER the insured certifies that the entire unit acreage was put to another use or a second crop. (If the entire unit is released to go to another use or a second crop, a Certification Form must be left with the insured, refer to PAR. 66.) Insurability of the second crop is determined in accordance with the applicable policy provisions and as outlined in PAR. 46, First (1st) Insured Crop Planted and Second (2nd) Crop.

(c) **Documentation of Determination that It is Not Practical to Replant**

AIPs must document all sources of information used to make the determination that it was not practical to replant**.** This documentation must be retained in the insured's file folder**.**

H Insured Replanted Without Notifying AIP of Intent to Replant or Replants without AIP's Consent

(1) Insured's must provide all notices required under the policy provisions. This includes notices when the insured wants to destroy any acreage of an initially planted crop and replant it. Section 14 of the Basic Provisions requires these notices. When the insured crop is destroyed without consent, the crop provisions provide for an amount of production to count that is not less than the production guarantee. When an insured crop is destroyed without consent and then replanted, no replanting payment can be made (if replant payment provisions are applicable to the crop) and no indemnity payment associated with the initial planting can be made.

(2) Additional policy provisions provide guidance regarding replanting, determination of the first insured crop, the second crop and crops which may be planted subsequent to a second crop. A first insured crop includes acreage that is replanted when replanting is practical.

(3) For any acreage where notice of damage was not given prior to the insured destroying any portion of the remaining stand and then replanting it, and the AIP determines replanting:

(a) **Was NOT practical** (for example, conditions were such that there was not adequate moisture, there was no marketing window, the condition of the field was not appropriate, etc.), no replant payment will be paid (if replant payment provisions applicable to the crop), and not less than the production guarantee per acre will be included as production to count. The subsequent

planting will be the appropriate subsequent crop; e.g., second crop. Insurability of the second crop is determined in accordance with applicable policy provisions.

(b) **Was practical** and the insured crop was replanted, insurance may be provided for the replanted crop. However, no replant payment can be made (if replant payment provisions applicable to the crop) in this instance, and the AIP will apply uninsured cause of loss appraisals for any reduction in yield that may have occurred due to replanting after the final planting date.

I Planting Other Acreage in Lieu of Replanting the Acreage Initially Planted

(1) Susceptibility to plant disease, susceptibility to damage due to soilborne insects or herbicides, blowing ground, or other soil conditions may make it impractical to replant on the initially-planted acreage. The insured IS NOT allowed to receive a replanting payment on other acreage planted to replace the initially-planted and subsequently destroyed acreage. Any such "replacement" acreage is treated as any other initially-planted acreage.

(2) If it is not practical to replant the crop on the initially planted acreage, the insured must elect whether to carry the crop to harvest or receive consent for other use. Follow all instructions for the appropriate preliminary or final inspections as outlined in the crop handbook.

J Replanting on Interplanted Acreage

(1) There is no specification in the endorsement/policy as to how a crop is to be replanted. However, if a replanting method contributes to any subsequent loss of production, such loss should be reflected in an appraisal for production lost due to uninsured causes.

(2) An existing stand does not have to be destroyed prior to replanting in order to qualify for a replanting payment as long as the acreage being replanted meets the minimum requirements in the policy/endorsement. If the insured chooses to interplant a spring variety with a winter variety, for example, the insured's inability to market or loss of value of the production because of the mixed classes is not insured against. If subsequent damage occurs which lowers the quality of the crop due to insurable causes, a determination of the value of the grain WITHOUT consideration of its mixed status must be made to determine the extent of any quality adjustment.

(3) The actual cost of replanting must be considered when making the replant payment if the crop provisions for the particular crop specify that the replant payment cannot exceed the actual cost of replanting. In cases of interplanting for such crops, it is even more important to ascertain the actual cost of the replant operation to assure that the replant payment claimed does not exceed this cost.

K Inability of Insured to Replant

No potential production will be assessed to acreage the insured has destroyed with consent to replant if, due to weather and/or soil conditions, the insured is unable to replant. However, if it is determined that the insured could have replanted within the time frame that it was still practical, prepare a revised acreage report designating the acreage as uninsurable (refer to PAR.'s 28-29 for revised acreage report instructions).

L Inspection to Release Acreage to be Replanted for Crops Not Having Replant Payment Provisions

Even though a crop or crop coverage may not be eligible for replanting payments, a majority of the crops still have replanting requirements, and the insured must provide notice of damage as described in preceding paragraphs.

(1) In all cases, the AIP representative, or other party responsible for recording notices, will record the notice of damage or loss and forward the notice to the person or office designated by the AIP to assign losses to adjusters.

(2) The adjuster will contact the insured to determine the insured's intent for handling the damaged crop and to determine whether a field inspection is required. The insured will be informed that if a field inspection is not performed, the insured should be prepared to show original seed receipts/tickets and other supporting receipts/tickets to support that the crop was initially planted and replanted in case of an audit or final loss to this unit.

(3) Determinations that field inspections are not required, must be fully supported by information documented in the insured's loss claim file, based on contact with the insured or the insured's authorized representative. Notices of damage MAY NOT require a field inspection when the crop provisions do not provide for replanting payments (or replant payments are not applicable because the policy has CAT coverage) for the crop and crop damage is consistent with other producers' crop damage in the area, and the other producers are replanting. Refer to (5) below.

(4) When the notice of damage is cleared without a field inspection, consent to replant will be considered given to the insured when the adjuster documents in the insured's claim file why a field inspection is not required and closes the notice of damage.

(5) A field inspection MUST be completed WHEN:

(a) Policy provisions provide for replant payments (except self-certification replant inspections and policies with CAT coverage);

(b) An insured requests consent to put insured acreage to another use;

(c) There is reason to suspect the insured did not follow good farming practices or uninsured causes of loss;

(d) Damage is inconsistent with other crops in the insured's area;

(e) There is any need to document actual field crop conditions; or

(f) It becomes evident (from contact with the insured or general crop conditions) that these insured crops have been damaged to the extent that replanting would be required, but the insured does not intend to replant the insured acreage. An inspection is required in order to determine practicability to replant and therefore insurability of the damaged acreage.

(6) No potential production will be assessed to acreage the insured has destroyed with consent to replant (with or without a field inspection if, due to weather and/or

soil conditions, the insured is unable to replant). However, if the insured could have replanted within the time frame that it was still practical, the acreage must be considered uninsured and the acreage report revised accordingly.

M Replanted During the Late Planting Period Due to an Uninsured Cause

(1) If the insured crop is replanted during the late planting period due to the crop being destroyed by an uninsured cause (e.g., chemical damage), it will not be considered to be late planted and no reduction in the guarantee will apply. The replanted crop will be handled as any other replanted crop (i.e., the AIP's consent is required before the insured can replant as stated in subparagraph K below, the initial planting date, initial planting practice, applies, etc.), except the insured is not eligible for a replanting payment on such acreage, if it is a crop that has replanting provisions.

(2) During final loss adjustment of a unit containing such acreage:

(a) Determine if there is any reduction of yield that can be directly attributed to replanting the crop acreage in the LP period. If there is, show the per-acre amount of reduced yield as an uninsured cause appraisal.

(b) To determine whether there is a reduction in yield, compare the subject replanted acreage yields to yields of timely planted acreage of the same crop in the surrounding area. If such acreage did not suffer any loss of yield due to an insured cause, then this should indicate the loss of yield can be contributed to planting in the late planting period. On the other hand, if timely planted acreage of the same crop in the same surrounding area shows the subject replanted acreage and timely planted acreage both had similar losses of yield due to insured causes, an appraisal for uninsured causes may be applicable.

66 PURPOSE OF THE CERTIFICATION FORM

A Uses of the Certification Form

Prepare the Certification Form upon completing:

(1) A replant inspection (for a replant payment) or;

(2) The "final" inspection when any of the following apply:

(a) **FOR IMMATURE CROP:**

All the Immature crop acreage on the unit has been appraised to be put to another use or planted to second crop, and it is expected that the insured's intentions for such other use will not change.

1 The adjuster must verify and document any zero appraisal on this acreage, as described in PAR. 85 J. Also refer to PAR. 85 C (1) (d) if this is a spring seeded-crop and insufficient soil moisture affected seed emergence.

2 If the crop is going to be destroyed to go to a second crop, the crop or crop seedbed for the first crop must be destroyed before the claim

can be finalized. If there is non-emerged first crop seed due to insufficient soil moisture, some insureds may request AIP authorization to plant the second crop in rows adjacent to the first insured crop prior to destroying the first crop seedbed because of the first crop planting practice (e.g., to avoid scattering first crop seed all over the field) and then destroy first crop emerged seed or the seed bed. AIPs may authorize the insured to do this for such a reason as cited above; however, the first insured crop claim cannot be finalized until the insured certifies the second crop has been planted and the first crop emerged seed or seedbed has been destroyed.

(b) **FOR MATURE CROP:**

1 **Prior to** the **time harvest is general** in the area, ALL of the mature, appraised crop acreage on the unit is to be released to go to another use.

2 **During or after harvest is general in the area**, the mature appraised crop acreage on the unit is to be released to go to another use or is to be destroyed (as stated b and a below) **ONLY WHEN ALL OF THE FOLLOWING APPLY**:

a The unharvested, mature production is appraised at **greater** than zero,

b The mature crop production has ZMV and the such production is required to be destroyed as stated in PAR. 96 J (2), **AND**

c The crop provisions allow the mature crop production to be quality adjusted to zero production to count AFTER such production is destroyed, as outlined in PAR. 96.

(c) The adjuster has not witnessed (or will not witness) destruction of production and there is the requirement to destroy mature appraised or harvested production that (due to an insured cause of loss) is to be considered zero production to count (or zero value to count, if applicable) due to: (1) applicable quality adjustment (e.g., ZMV) or (2) in accordance with the applicable crop provisions (or applicable crop endorsement, if applicable due to extent of damage to the crop (e.g., freeze damage to potatoes insured under Quality Endorsement). Refer to PAR. 96 J for ZMV production.

(d) Production records are not readily available, for certain crops (or unavailability of price information to determine production value, if required to complete a claim; e.g., the quality of the cotton is not known to complete the claim). Refer to PAR. 69 F (2) for the adjuster's instructions for completing the Certification Form and the instructions to provide the insured for returning the form.

(e) The crop can never be mechanically harvested. The insured must sign a certification statement on this form as instructed in PAR. 85.

(f) The requirement to destroy an immature or mature crop or put an immature crop to another use on the entire unit before indemnification is waived due

to wind and soil conditions as indicated in PAR. 134. The insured must sign a certification statement on this form as stated in PAR.134 B (2).

(g) The insured wishes to allow gleaning of the crop or remaining crop. The insured must sign a certification statement on this form as stated in PAR. 94 G (2).

(3) Refer to Exhibit 11 for Certification Form completion instructions.

B When destruction of the production (plants for nursery) is required, as stated in A (2) (b) above:

Before leaving the Certification Form, the adjuster must:

(1) Provide the insured with the methods of destruction that are considered acceptable to the AIP;

(2) Instruct the insured to enter the date the production was for destroyed (plants were destroyed for nursery) and document in the "Remarks" section of the Certification Form, the destruction method; and

(3) Advise the insured that when the AIP receives the Certification Form back showing the insured's certification of the destruction of the production (plants for nursery), that another on-the-farm inspection will be made to verify destruction of the production and the destruction method.

C When Insured is to Return Certification Form. The insured returns the Certification Form to the person or office designated by the AIP when, as applicable:

(1) The acreage has been replanted,

(2) The acreage has been put to another use or planted to a second crop (if non-emerged seed of first insured crop due to insufficient moisture and A (2) (a) 2, are applicable, the certification as stated therein),

(3) Production (plants for nursery) has been destroyed as required in A (2) (c), or

(4) The production records have been received as indicated in A (2) (d) above.

D Adjuster Review of Returned Certification Form. When the insured signs and returns the Certification Form with a proper indication of "Replanted," "Destroyed", or "Other Use" of the acreage, review all data on the Certification Form and claim.

(1) **Destroyed mature unharvested production appraised at greater than zero to be quality adjusted to zero production to count or destroyed harvested production to be quality adjusted to zero production to count** (as described in A (2) (b) above) requires the adjuster to make another on-the-farm inspection to verify destruction and whether the destruction method was acceptable, as described in (a) below. Also, refer to PAR. 96 J (2) (a) 2. For nursery, destroyed ZMV plants.

(a) **Acceptable Destruction Methods**. An acceptable destruction method is a method that will result in the production (plants for nursery) having no possibility of being marketed or of a salvage use that could result in any

type of compensation to the insured. The insured should follow any method prescribed by State or Federal regulations or guidelines.

(b) Documentation of Destruction Method. The adjuster must document on the claim form or on a Special Report the method of destruction, whether destruction was an acceptable method, the date the verification and on-the-farm visit took place, and any other pertinent information.

(2) **When crop is replanted, put to another use (disked, plowed, planted, etc.) or planted to a second crop:**

(a) If all data on the Certification Form and the claim agree, the adjuster signs and dates the claim form. (The claim will have been prepared as a "Final" during the appraisal inspection, and signed by the insured.) After receiving the Certification Form, the adjuster must have the certification reviewed and the claim signed and returned to the AIP within the time frame designated by the AIP.

(b) If any data on the Certification Form and the claim do not agree, the adjuster MUST NOT sign the claim form. The adjuster will make another farm visit. If, during the subsequent farm visit, the adjuster still does not

agree with the information on the claim, the claim will be voided and a new claim prepared based upon the facts found on the farm visit.

E Claim Form Completion Instructions. Refer to the individual crop handbooks.

67 INDEMNITY INSPECTION - FINAL (INCLUDING NO INDEMNITY DUE CLAIMS OR DENIED CLAIMS)

A final inspection must be made in order to document production, acreage, insured and uninsured causes of loss, and all other pertinent entries to determine the amount of indemnity, unless the notice has been withdrawn or cleared.

A Field Visit. To make adequate determination, actual visits to the field(s) where the crop is/was grown must be made.

B Information to Consider. Consider information from preliminary inspections, and review the determinations of any previous inspection(s), if any.

C Additional Determinations. Make additional determinations as required to establish the amount of production and loss, if any.

D Procedures. Refer to specific areas of this handbook for more information regarding determinations of total production, acreage, appraisals, insured/uninsured causes, shares, etc. Refer to PART 5 for claims involving late planted acreage or the Prevented Planting Handbook for prevented planting acreage.

E Comparison of Representative Strip Production to Harvested Production
Use representative strips the insured has left at harvest time, as required by the policy provisions, to determine whether harvested production is comparable to production in the strips. These representative strips **are not the same** as representative sample areas used for appraisal purposes, as described in PAR. 88.

(1) If there is a large discrepancy between harvested production and production within the strips, obtain all pertinent information needed; however, DO NOT sign the claim(s) at this time. Contact the AIP for assistance in completing these cases. If necessary, controversial claims will be prepared (some AIPs use Non-Waiver Agreements rather than controversial claims). Refer to PAR. 120.

(2) In the event representative strips are comparable to harvested production and the representative strips do not represent a significant portion of the insured acreage, the acreage strips will be considered as harvested; however, no production from the strips will be counted. The AIP has the authority to develop guidelines for determining the portion of the insured acreage involved for representative strips, which would be considered "significant." IF the strips represent a "significant" amount of the acreage, the production from the amount of acreage that is excessive will be included in the production to count.

(3) If the representative strips have not been left or have been destroyed prior to the inspection, determine if production is reflective of crop residue and conditions in the area. If you are satisfied the production to count is reasonable, prepare the claim accordingly. If production to count is not reflective of crop residue and area conditions, refer the case to the AIP for assistance in handling. (In some cases, this may be grounds for rejection of the claim by the AIP in accordance with the applicable Basic Provisions and crop provisions.

F Review Prior Determinations. Review the determinations of any inspection giving written consent for other use of a part of the total acreage in a unit. If the earlier inspection was incomplete or the information is incorrect, explain in narrative of the claim form or submit documentation on a Special Report.

G Claims of Persons Affiliated With MPCI Program

If the claim is filed by any FCIC employee or AIP employee; or loss adjustment contractor, agent, or anyone directly affiliated with FCIC, or an AIP; the claim must be reviewed by the AIP (or other disinterested party assigned by the AIP) prior to payment of the claim. Generally, the AIP will accompany the adjuster on the initial loss adjustment inspection and will conduct the review at the same time. If it is not known prior to the loss adjustment inspection that the claim is for an employee or any other person described herein, the adjuster is to notify the AIP immediately so that an AIP representative has the opportunity to accompany the adjuster during the inspection.

H DO NOT finalize claims until you are satisfied with all determinations, including but not limited to:

(1) Total disposition of the crop;

(2) Value (or reduction in value (RIV), if applicable) of the crop needed for quality adjustment purposes. Special care must be given when there are ZMV (1.000 RIV) offers (or non-marketability) in a local area or extremely low market price (or extremely high RIV, if applicable) for the crop in the local marketing area (Refer to PARs. 96 H (1) and (7) regarding reasonable RIVs and PAR. 96 J regarding ZMV production – ZMV plants for nursery); and

(3) The insured's Certification Form, if applicable, has been received and verified. Refer to PAR. 66.

I Indemnity Due. If an indemnity is due, refer to the individual crop handbooks for procedure in completing the claim.

J "No Indemnity Due Claims"

There are two reasons a claim may result in a "No Indemnity Due" claim, as follows:

(1) "No Indemnity Due" claims due to production exceeding the guarantee

(a) This type of "No Indemnity Due claim must be verified by an APPRAISAL or NOTIFICATION from the insured that the production exceeded the production guarantee (or value of crop exceeded the dollar guarantee, if applicable); i.e., damage/amount of loss (or revenue) was not great enough to generate a loss.

(b) If it is determined that NO INDEMNITY IS DUE during an inspection:

1 Complete the inspection;

2 Record all pertinent information on either of the following:

a the claim as instructed in the crop handbook, OR

b if directed by the AIP, complete and have the insured sign a "Withdrawal of Claim" form (meeting the FCIC-form standards) rather than prepare a "No Indemnity Due;" and

3 If inspection determinations indicate a reduction in premium is applicable, follow the AIP's instructions.

(2) No Indemnity Due claims as the result of a MIF being applied to the indemnity amount. Refer to PAR.s 21 and 29 for more information regarding MIFs.

K Denied Claims[1/] (Including Stage Code for Denied Claim)

Anytime a loss adjustment inspection takes place and the claim is denied[1/] by the AIP, a PW must be completed with at least the following information: Claim Number; Policy Number; Crop Year; Crop Code; Unit Number; Type or Variety; Practice; Stage Code; "DC" (means denied claim); acres [2/] or number of trees[2/] for tree crops; First Notice of Loss Date; Adjuster's signature; Adjuster's code number; and Adjuster's signature date. This information must be transmitted to RMA according to Appendix III requirements. The PW and all other documentation explaining the reason the claim was denied must be placed in the insured's loss folder.

[1/] For the purpose of this procedure a denied claim is any claim for which the insured believes they should be paid an indemnity, replant payment, or prevented planting payment but results in the AIP denying such a claim.

[2/] The number of acres or of trees do not have to be determined for a denied claim; they can be the number of acres or of trees reported on the insured's acreage report.

L Final Claims Settled on Appraised Production and Appraised Acreage Is Later Harvested

(1) If a claim is settled on the basis of appraised production, the insured must notify the AIP if the appraised acreage is later harvested. Claims settled on appraised acreage that is subsequently harvested will be handled as follows:

(a) If the adjusted[1/] amount of harvested production **EXCEEDS the appraised production,** a corrected claim will be prepared and processed using the harvested production. The insured will be required to repay any overpaid indemnity.

(b) If the adjusted[1/] amount of harvested production **is LESS than the appraised production, AND** the insured harvests:

1 **After the EOIP**, the appraised production will be used to adjust the loss UNLESS the insured can prove that no additional causes of loss or deterioration of the crop occurred after the EOIP;

2 **Before the EOIP**, a corrected claim will be prepared and processed using the harvested production, and any additional indemnity amount due will be paid to the insured.

[1/] Adjusted amount of harvested production is harvested production AFTER applicable adjustments; i.e., test weight, moisture, FM, and/or quality adjustment.

(2) The standard corrected claim tolerances apply to these procedures.

68 INDEMNITY INSPECTION (FINAL) - END OF THE INSURANCE PERIOD (EOIP)

A When the calendar date for the EOIP has been reached, and the crop has not been harvested, appraised production will be used to adjust the loss if the crop will not be harvested. A final inspection is required as soon as practical unless the AIP determines that insured perils (listed in the policy) delayed and prevented harvest of the crop.

(1) AIPs may settle claims based on harvested production by authorizing additional time to harvest on a case-by-case basis if:

(a) The AIP determines and documents that the delay in harvest was due to an insured cause of loss; and

(b) The insured proves that harvest was not possible; and

(c) The delay in harvest was not due to uninsured causes of loss or because the insured did not have sufficient equipment or manpower to harvest the crop by the calendar date for the EOIP.

(2) If additional time is not granted because it is determined that an insured peril was not the cause for the crop not being harvested; and there is significant snow cover, the crop is under water, or extreme wet conditions exists, AIPs should not, and are not required to, perform final inspections when such conditions make it impossible to obtain appraisals accurately according to procedures.

(3) AIPs are expected to perform appraisals and close out any open claims after the calendar date for the EOIP once conditions improve sufficiently to do so.

(4) When an appraisal is deferred for immature crop acreage that has been released to go to another crop or use, the end of insurance period does not occur for such acreage until the representative areas left for the deferred appraisal have been appraised or harvested (within time frame specified in procedures or crop provisions where there is a disagreement of appraisal amount), unless the insured failed to care for the representative areas (i.e., abandons the acreage in the representative areas). Refer to PAR.'s 85 C and 88 for more information about deferred appraisals.

B When the AIP authorizes additional time to complete loss adjustment due to an insured peril preventing harvest by the calendar date for the EOIP (as stated above), follow the instructions below:

(1) Notify RMA's Risk Management Services Division (RMSD) via e-mail at RMA.RMSD@rma.usda.gov when authorization is being provided to an insured or insureds, list the number of units by crop, county, and state for which the authorization was given, the reason authorization is being given. If it is anticipated that there may be additional authorizations needed for crop units, provide approximates of the preceding information (i.e., number of units by crop, etc.) and note that the information is based on approximations. RMSD will notify the other AIPs, PDD, Risk Compliance, RMA ROs, and CFOs that service the counties/states where the authorizations have been provided.

(2) If harvest completion was delayed due to an insurable cause occurring within the insurance period, any subsequent damage to the crop, due to the insurable causes specified in the contract, is covered provided that it is determined on a case-by-case basis that the insured has:

(a) Complied with the notice of damage or loss requirements identified in the policies and administered in accordance with the loss adjustment procedures, and

(b) Made every reasonable attempt to harvest the crop timely and properly.

(3) This does not include a mature crop that could have been harvested by the calendar date for the EOIP but was not because the insured was waiting for the moisture to decrease to avoid drying costs. In such cases, appraise the crop and finalize the claim as soon as possible after the calendar date for the EOIP.

(4) The calendar date for the EOIP is NOT extended. Rather, the insured is given additional time to attempt to harvest the crop in order to settle any loss on the basis of harvested production.

(5) In the above circumstances, any subsequent and unavoidable loss of production caused by insurable causes is to be considered as an unavoidable loss resulting from the original insurable cause, which prevented the timely harvest of the crop. Any avoidable loss of production is to be charged as an appraisal against the guarantee.

(6) The insured is expected to harvest the crop if a window of harvest opportunity arises. If the insured had the opportunity to harvest and failed to do so, AIPs are to appraise the acreage and finalize the claim based on the appraisal. Damage occurring after the producer had an opportunity to harvest is uninsurable.

(7) Verify and document that damage resulted from insured causes occurring during the insurance period (as clarified in B (2) and (3) above). Items to verify include (but are not limited to) the following:

(a) Specific variety planted.

(b) Planting date.

(c) Length of normal growing season needed for the insured crop variety.

(d) Insurable causes preventing timely harvest and dates of occurrence.

(e) Area conditions, surrounding producers' situations, percent of harvest completion in the area, the adequacy of the insured's harvest equipment and efforts to harvest, and windows of harvest opportunity.

(f) The rationale for establishing the portion of the loss resulting from causes which occurred during the insurance period and any appraisals for uninsured causes.

(g) If AIPs wish to further document that the insured was informed of the above, they should retain in the insured's file folder, a copy of the document sent or given to the insured that outlines the insured's responsibility to mitigate the damage by harvesting at first opportunity, and informing the insured that if a window of harvest opportunity occurs and harvest does not occur, appraisals will be assessed for failure to follow recognized good farming practices. The date the document was mailed or given to the insured should be noted on the copy.

(h) Photographs, video, etc., if they will conclusively verify the reasons that the crop could not be harvested by the EOIP.

(8) If a loss is anticipated and acreage remains unharvested, perform an inspection on the unharvested acreage in the unit as soon as possible after the calendar date for the EOIP. Although it is preferred to provide the insured reasonable opportunity to harvest the crop and to settle losses on the basis of harvested production, very few claims should remain to be finalized beyond 60 days after the calendar date for the EOIP. Such cases will require extensive documentation to support proper payment of the affected claims.

(9) All applicable instructions in PAR. 67 also apply.

69 INDEMNITY INSPECTION (FINAL) - DELAYED NOTICE OF DAMAGE OR LOSS AND/OR DELAYED CLAIM

A Delayed Notice and Delayed Claim Definition.

(1) A DELAYED NOTICE is a notice that the insured files after the time specified in the policy provisions. The specified time to submit a notice:

(a) For annual planted crops (for production losses and dollar losses under dollar plans of insurance) is "within 72 hours of initial discovery of damage but not later than 15 days after the EOIP [1/] by unit, for each insured crop" in a county.

(b) When there is only a revenue loss under CRC, RA, and IP plans of insurance, is within 45 days of the date RMA issued the harvest price for any crop in the unit.

(c) For PP notices, the notice must be filed within 72 hours:

1 After the final planting date if insured is not going to plant in the LP period, if applicable, or

2 Of when the insured determines the crop will not be planted within any applicable late planting period.

(d) For perennial crops and other plans of insurance, the specified timeframe for filing notices may differ from the preceding information; refer to the specific policy provisions for these crops.

(2) A DELAYED CLAIM is when the insured submits a claim (signs a final claim) later than the time allowed in the policy provisions [2/], unless prior to the end of the 60 day period, the insured:

(a) Requests an extension in writing and the AIP agrees to such request (Extensions will only be granted if the amount of loss cannot be determined within such time period because the information needed to determine the amount of the loss is not available); or

→Applicable only for grain crops

(b) Has harvested farm-stored grain production and elects, in writing, to delay measurement of the farm-stored production and settlement of any potential associated claim for indemnity (Extensions will be granted for this purpose up to 180 days after the EOIP[1/])

[1/] The Basic Provisions state the EOIP is the earlier of: (1) The total destruction of the insured crop on the unit; (2) Abandonment; (3) Harvest of the unit; (4) Final adjustment of a loss on a unit; (5) The calendar date for the EOIP; or (6) As otherwise specified in the Crop Provisions.

[2/] For crops insured under the CRC and RA Basic Provisions, the insured's claims must be submitted no later than 60 days after RMA issued the harvest price for the crop. For crops insured under the CCIP Basic Provisions, the claim must be submitted no later than 60 days after the EOIP, unless specified otherwise in the crop provisions or SPOIs.

Applicable only for grain crops ←

→**Applicable only for grain crops**

(3) When an insured requests delayed measurement of his or her farm-stored grain production for up to 180 days after the EOIP[1/], the following procedures will apply:

(a) If all or part of the landlord's and tenants' share of the grain crop is in the same farm-storage structure and if one of the entities requests 180-day delayed measurement of their farm stored production, then the associated claims for the unit(s) of the tenant or landlord can be settled based on:

1 Measurements of stored production on the date of final inspection if the insured does not elect the 180 delay in measurement;

2 Measurements of stored production at the end of the 180-day period if the insured elects the 180 delay in measurement, or

3 Sold production if sold prior to the end of the 180-day period.

Refer to subparagraph (c) below.

(b) The insured may submit a written request to delay measurement of his or her farm-stored grain production by unit, crop, or county basis. However, if an insured requests the 180-day delayed measurement for all units of a grain crop having farm-stored production or for all units of all grain crops insured in the county that has farm-stored production, then all of the associated claim units must be held open up to 180 days after the EOIP[1/]. When multiple units are stored in a single structure with different EOIPs, the latest EOIP[1/] date that applies to the stored grain will be used to determine the 180-day time period.

(c) If an election to delay measurement of the farm-stored grain production is in effect and the insured:

1 Sells all of the grain production prior to the end of the 180-day period, the adjuster will use the settlement sheets from the buyer to settle the claim, However, any applicable quality determinations will be as described in item subparagraph (3) (d) below.

2 Delivers the grain production to commercial storage prior to the end of the 180 day period, the adjuster will use the Commercial Storage Records provided to the insured to determine the amount of production in storage. However, any applicable quality determinations will be as described in item subparagraph (3) (d) below.

3 Sells only a portion of the grain production prior to the end of the 180-day period and the balance of the grain is still in the structure at the end of the 180-day period, the adjuster will determine the gross production from the settlement sheet for the sold production plus the adjuster's measurements of the grain left in the storage structure at the end of the 180-day period. Any applicable quality determinations will be as described in subparagraph (3) (d) below.

Applicable only for grain crops ←

[1/] The Basic Provisions state the EOIP is the earlier of: (1) The total destruction of the insured crop on the unit; (2) Abandonment; (3) Harvest of the unit; (4) Final adjustment of a loss on a unit; (5) The calendar date for the EOIP; or (6) As otherwise specified in the Crop Provisions.

→**Applicable only for grain crops**

4 Feeds some of the grain production that was in the farm storage structure prior to the end of the 180-day period and has acceptable feed records in accordance with PAR. 92, the adjuster will use those records, plus the calculated grain production based on the adjuster's measurements of any remaining stored grain production at the end of the 180-day period. If the total grain production for the unit cannot be established and verified as stated herein, the adjuster will handle in accordance with the procedures in section 4 herein. Any applicable quality determinations will be as described in subparagraph (3) (d) below.

5 Has acceptable weight tickets for the grain production in the on-farm-storage structure, in accordance with PAR. 104, the adjuster will follow the procedures in PAR. 104 to determine at the end of the 180-day period whether the weight tickets or the grain production determined from the adjuster-measured production will be used. Any applicable quality determinations will be as described in subparagraph (3) (d) below.

(d) All quality deficiencies must be determined no later than 60 days after the calendar date for the EOIP[1/] for crops having QA provisions in the SPOIs (for crops that have the quality provisions in the crop provisions, 60 days after the EOIP). Damage that occurs after the EOIP[1/] is not covered; e.g., quality or additional quality damage occurring while in storage)

1 Samples to determine all substances or conditions injurious to human or animal health must be obtained prior to grain production going into storage except for Vomitoxin; otherwise, no quality adjustment will be allowed for such deficiencies – refer to PAR. 102 for more information.

2 The AIP will use the quality deficiencies and levels of quality deficiencies determined on the initial inspection (for example, test weight, kernel damage, or vomitoxin) to settle the claim, unless prior to the deadline dates specified in (d) above, the production is: (1) delivered to a buyer or (2) put in commercial storage. If the production is delivered to a buyer or put into commercial storage prior to the deadline dates specified in (d) above, the quality deficiencies determined by a licensed grain grader from the samples taken at time of the delivery can be used, EXCEPT for Aflatoxin or other mycotoxin that must be determined prior to storage, as stated in PAR. 102.

Caution: **Only Aflatoxin levels determined from samples taken prior to on-farm-storage can be used to settle a claim.) Copies of grade sheets must be retained in the insured's loss file.**

Applicable only for grain crops ←

[1/] The Basic Provisions state the EOIP is the earlier of: (1) The total destruction of the insured crop on the unit; (2) Abandonment; (3) Harvest of the unit; (4) Final adjustment of a loss on a unit; (5) The calendar date for the EOIP; or (6) As otherwise specified in the Crop Provisions.

→**Applicable only for grain crops**

(e) If the insured has a 180-day delayed measurement request in effect, the insured may request that the AIP settle the claim at any time prior to the end of the 180-day period. When the insured makes the request to settle the claim prior to 180 days after the EOIP[1/], the AIP will settle the claim as soon as possible after the date the insured made this request. The insured's signature on the Production Worksheet (claim form) will indicate the insured's intent to settle prior to the end of the 180-day period.

(f) For APH based policies: If the 180-day measurement delay continues beyond the date the insured is required to submit his/her production report, the insured will be assigned the previous year's approved yield as a temporary yield in accordance with applicable CIH procedures.

(g) The 180-day measurement delay does not extend any dates specified in the policy by which premiums, administrative fees, or other debts owed must be paid.

(h) At the end of 180 days, the adjuster will measure the production as soon as possible so the claim can be completed and submitted (signed by the insured) no later than 30 days after the 180th day.

Applicable only for grain crops ←

B <u>Acceptance of a Delayed Notice.</u>

(1) The AIP may accept the notice only **if** the notice was provided within the timeframe stated in the policy provisions for submitting (signing) final claims (replant, prevented planting, or indemnity) unless excepted as stated in (2) below. **A notice submitted later than the timeframe in the policy provisions for submitting claims must be denied, unless excepted as stated in (2) below.**

Example of an Acceptable Delayed Notice for Corn Production Loss: The insured finished harvest of the loss unit on October 1. (In accordance with the policy provisions, the insurance period ended upon harvest.) The insured mailed the notice on October 30, and the AIP received it on Nov 3. In order to meet the policy requirements, the notice would have to be received by the AIP by October 16. The notice is 18 days delayed but within the time required to submit (sign) a final claim specified in the policy provisions and the AIP is able to satisfactorily make all loss determinations.

(2) The following are exceptions for which the AIP may accept notices for a crop unit(s) filed later than the time specified in the policy provisions for submitting claims; however, accepting this notice does not constitute acceptance of the insured's claim. Acceptance of the insured's claim is still dependent upon whether all loss determinations can be satisfactorily made:

(a) There is a companion contract that has a timely notice or accepted delayed notice for the same unit/crop from which the information used to settle the companion contract claim might be able to be used to complete the insured's claim. Refer to subparagraph D for further information regarding the use of the companion contract information.

[1/] The Basic Provisions state the EOIP is the earlier of: (1) The total destruction of the insured crop on the unit; (2) Abandonment; (3) Harvest of the unit; (4) Final adjustment of a loss on a unit; (5) The calendar date for the EOIP; or (6) As otherwise specified in the Crop Provisions.

(b) There are other units of the same crop in the county having a timely notice or an accepted delayed notice that is not past the time specified for submitting claims.

(3) The AIP will perform any necessary inspections, including the Delayed Notice Report outlined in subparagraph G below (Delayed Notice Report is not required when a companion contract is involved - see subparagraph D below). When the insured submits a delayed notice, remind the insured of:

(a) The requirement for filing timely notice of damage, by unit for each insured crop in a county.

(b) The right of the AIP to reject any claim if the insured's failure to give timely notice affects the AIP's ability to SATISFACTORILY establish ALL data needed to properly adjust the claim, including notice for which B (2) applies.

C Delayed Claims

(1) Delayed claims can only be accepted when:

(a) The insured has received an extension from the AIP as explained in subparagraph (2) below;

(b) Through no fault of the insured, the AIP was unable to complete the final claim within the required timeframe; or

(c) The AIP has granted an extension for a delayed notice due to one of the reasons stated in subparagraph B (2).

(2) The insured's failure to submit (sign) the final claim within the time specified in the policy provisions for the applicable plan of insurance, **or** to provide the required information will result in a mandatory denial of the claim, unless:

(a) The insured has requested and the AIP has granted the insured an extension (**AIPs can only grant extensions if** the amount of the loss cannot be determined within such time period because the information needed to determine the amount of the loss was not available.)

(b) The insured acquired all information necessary to complete and sign their claim within the required timeframe, but through no fault of the insured, the AIP was unable to complete and obtain the insured's (or authorized representative's) signature on the claim form within that time frame. This would be when circumstances beyond the AIP's control prevent the AIP from completing and obtaining the insured's signature on the claim form by the required time frame; e.g., unusually large numbers of loss adjustment inspections due all at the same time. When such circumstances arise, RMA expects AIPs to handle all losses as expeditiously as possible while still staying within the confines of FCIC-issued policy provisions and procedures.

D Delayed Notices Which Have Companion Contracts that Have Been Finalized

(1) Unless you disagree with the findings, use the information from the companion contract to make your determinations. (The information from a withdrawn

companion contract claim may be used if all the determinations needed to complete a final claim have been made). Do not make your determinations until you have reviewed the companion contract and all respective documentation. Enter date and code number on the claim form, but DO NOT sign the claim.

(2) Submit a Special Report with the following information and any other information relevant to the case: Do not include the items in subparagraph G below, except as stated in D (4) below.

(3) State whether you agree with the companion-contract findings. If you disagree, identify any findings that you do not agree with and why.

(4) If the companion contract was a delayed notice, were all the items listed in subparagraph G addressed in the report for the companion contract? Document your findings on any pertinent items omitted. Include a copy of the report initially prepared for the finalized companion contract as part of the documentation.

(5) If a companion contract has not been finalized, follow the procedures pertaining to companion contracts found in the crop handbooks; and if applicable, subparagraphs E, F, and G below. If the companion contract is with another AIP, follow the instructions regarding companion contracts in PAR. 25 (4).

E Caution. For an inspection involving a delayed notice or a delayed claim, the adjuster DOES NOT have the authority to bind the AIP to any particular course of action, UNLESS authorized as outlined. If this inspection IS NOT authorized under C (1) (a) and (b) above, do not make statements to the insured which could be construed as admitting or denying liability. Inform the insured of the following:

(1) The adjuster's responsibility is limited to establishing the facts and assisting in the preparation of the delayed notice or delayed claim for consideration by the AIP.

(2) The AIP will inform the insured in writing of the approval or rejection of the claim.

F Delayed Notice and/or Delayed Claim Inspection

(1) For all claims involving accepted delayed notices:

(a) Follow the loss adjustment procedures for making appraisals, acreage determinations, acreage report information verifications, uninsured causes, etc.

(b) Complete all claim form entries for which the determination CAN satisfactorily be made, but DO NOT SIGN the claim. If there is any determination that cannot be satisfactorily determined, do not make an entry on the claim form for that information. Document it as indicated in subparagraph G below.

(2) For all claims involving the AIP granting an extension to submit the claim later than the time specified in the policy provisions for submitting claims (Delayed Claims - No Delayed Notice Involved):

(a) Make a preliminary inspection and make all determinations possible and complete the claim form without the production records or settlement price information.

(b) Enter "Certification Form – Delayed Claim Extension" in the heading of the claim form or note in the narrative that a Certification Form-Delayed Claim Extension was used.

(c) Obtain the insured's signature and date. Do not sign or date the claim form during the initial inspection.

(d) Complete a Certification Form and notate in the remarks “AIP approved Delayed Claim Extension.” In the remarks (Refer to Exhibit 11.)

(e) Instruct the insured to do the following when the production records or settlement price(s) are available:

1 Enter "Production Records Available" or “Settlement Price Available” in the "remarks" section of the Certification Form;

2 Sign and date the Certification Form; and

3 Return it to the person/location indicated on the Certification Form or as instructed by the AIP.

(f) Upon receipt of the completed Certification Form; sign, date, and mark the Certification Form indicating a farm visit is required to obtain the production records (or settlement price, if applicable) and for completion of the claim.

(g) For this type of delayed claim: The AIP will file the insured’s request for an extension and the AIP’s approval of the extension in the insureds claim file. The Certification Form will be all the documentation required; the instructions in the following subparagraphs will not apply unless the claim is also a delayed notice.

(3) If a claim involves an acceptable delayed notice (as stated in B above) and the AIP has also extended the time for submitting claims, with the exception of claims involving companion contracts as stated in D above, the Delayed Notice Report in G below must be completed, and the claim cannot be paid unless it meets the approval criteria in H below.

G Delayed Notice Report

Document on a Special Report whether or not information necessary to accurately determine the amount of loss is available by addressing the items listed below, and any other pertinent information. Attach the completed Special Report to the claim form and forward to your AIP. For delayed notices involving PP claims, adapt this report to address whether all the information necessary to verify whether the crop was prevented due to an insured cause still exists.

(1) The number of acres of the insured crop, by unit, practice, and type that had been plowed, pastured, or otherwise used after the time the insured was required to give notice of loss under policy provisions.

(2) Whether all acreage could be accurately identified and whether such acreage was measured or estimated.

(3) How the actual production was determined, including information as to whether the records of anyone buying production from the insured were examined.

(4) The cause of loss and how it was possible to establish that all of the loss occurred within the insurance period.

(5) How appraisals of unharvested, mature production were determined.

(6) Whether any uninsured causes contributed to the loss, and if so, the methods used in making per-acre appraisals for such causes. (See PAR. 121.)

(7) How production on the unit compared with that of other farms in the community; include a statement as to whether other insureds or producers on nearby farms incurred similar losses.

(8) If the insured's reason for delay was inability to harvest timely because of unfavorable weather during the normal harvest period, include the following information:

(a) The date when the insured started harvesting this crop, and the date harvest was started on this unit.

(b) To what extent neighboring farmers (both insured and uninsured) were able to complete harvest by the calendar date for the EOIP specified in the crop policy or endorsement.

(c) Whether the insured owns harvesting equipment and if it was adequate to complete harvest timely under normal conditions. Whether the insured performed custom work in lieu of timely harvesting his/her insured crop.

(d) If the insured does not own adequate equipment, document whether:

1 There was firm, advance custom arrangements, assuring prompt harvest of the crop upon maturity,

2 The insured deferred making arrangements until harvest time, or

3 The insured depended upon equipment that would not be available until the custom operator completed his/her own harvest or that of other farmers.

(e) With readily available equipment and other necessary facilities, the earliest date harvest could have been completed under the weather and soil conditions that existed.

H Approval/Rejection Guidelines for Delayed Notice of Loss

Generally, the amount of loss CANNOT be accurately determined if the insured failed to give the AIP the opportunity to examine the unharvested crop potential or the harvested crop residue. Therefore, usually a claim will be rejected if the crop and crop residue have been removed from the fields prior to loss adjustment inspection. However, if such a claim is approved, it will require extensive documentation to support satisfactory determinations of planting practices, production, etc.

I Approval or Rejection of a Claim Having a Delayed Notice

(1) The AIP's approving official will:

(a) Approve only claims for which the adjuster was able to satisfactorily establish all of the data needed to properly adjust the claim; and

(b) Reject claims for which the adjuster was not able to satisfactorily establish all of the data needed to properly adjust the claim.

(2) Provide written notification to the insured of approval or rejection of the claim.

70 PRODUCTION PRE-MEASUREMENT SERVICE INSPECTION

A General Information. In order to keep production separate by unit when there is a probable loss situation for a crop, ADJUSTERS, not insureds (unless the AIP's authorization is given – refer to PAR. 105), are to measure existing production in a single storage structure when an insured is going to add production from another unit, crop year, or production harvested from acreage which has been identified as uninsurable and such production will not be weighed before placing in the storage structure. Refer to PAR. 104.

B Measurements from FSA. Insured's can also request measurement services from FSA for grain in on-the-farm-storage. Storage measurements (not calculated production from the measurements) for each individual unit, etc., taken from FSA records are to be accepted for this purpose (including any FSA-moisture determinations made at the time of measurement), unless:

(1) The AIP has supportable reasons to believe the measurements are incorrect (or moisture determinations made at the time of measurement were incorrect);

(2) The paperwork upon which the measurements are recorded DOES NOT contain all of the following:

(a) Insured's name,

(b) For each structure measured:

1 Date of each measurement that shows that the measurements were done just prior to production being added to the existing production from another unit, crop year, or uninsured acreage or vice versa;

2 Dimensions of the structure and depth of production in each structure for: (1) preceding crop year's production (if applicable) with crop year(s) identified, (2) each unit for current crop year with crop year identified (if unit number is not shown, the field(s) the production was from, production from uninsured acreage (if applicable), and (3) measurements of space displaced by chutes, vents, etc.; and

3 Location of the structure with some type of alpha/numeric or other type identifier for each structure.

C Insured's Notification to AIP for Production Pre-Measurement from the AIP

Prior to adding such production, the insured will notify his/her AIP that measurements are needed for this reason. The AIP will immediately forward this information on to the appropriate personnel who sets up the adjuster assignments so that the insured can be contacted for an appointment or as otherwise described in PAR. 105, provided all parts of the criteria for authorization in PAR. 105 have been met.

D Recording Production Pre-Measurement for AIP

The Pre-Measurement Service will be recorded on a claim form or other form used for this purpose. At least the following information must be recorded when performing a Pre-Measurement Service Inspection:

(1) Insured's Name (as shown on the most recent Policy Confirmation).

(2) Policy Number from the Policy Confirmation.

(3) County and State if it cannot be identified within the policy number.

(4) Unit Number.

(5) Crop Year (crop year in which the production pre-measurement service is conducted.

(6) Location of the storage structures being measured.

(7) Date the insured requested the production pre-measurement service. (This date can be considered as a notice of loss for follow-up purposes.)

(8) Measurement of each structure being measured and depth of production in each structure, and if applicable, measurements of space displaced by chutes, vents, etc. Use separate line entries to identify each structure and varying share(s).

(9) If measurement is for corn, indicate whether the corn is shelled, ear, silage, etc.

(10) Indicate, by structure, from what crop year the production was harvested.

(11) Sketch map showing structure design of the storage facility(ies) and its relative location to the farmstead home. (Identify each structure with a numeric or alpha designation. Correlate the numeric/alpha identification of each structure with the line entry for the measurement or calculation of each structure.)

E Distribution of AIP's Pre-Measurement Documents is, as follows:

(1) Copy to insured, and

(2) Original to office that the AIP has designated to maintain insureds' files of original documents.

71 GROWING SEASON INSPECTION

Growing Season Inspections (GSIs) are done as a part of quality assurance and may be done in conjunction with a Pre-Harvest Inspection (refer to PAR. 72).

A Recording Inspection

Record the GSI on the following:

(1) GSI Report (Refer to D below.);

(2) Aerial photocopy (Refer to E below.);

(3) Appraisal Worksheets for each unit of the crop being inspected. Refer to "Exception" for completing appraisals in B (2) below. (Follow the appraisal and Appraisal Worksheet instructions (including insured and adjuster's signatures) in the applicable crop loss adjustment handbook for the crop being inspected); **and**

(4) GSI Form, which can be one of the following:

(a) A PW form with the required standard entries completed as identified in C below; or

(b) A GS I form with the required standard entries completed as identified in C below.

(5) Photos and/or video. Refer to PAR. 119 B for instructions on the use of photos and/or videos for documentation purposes.

B Appraisals

(1) Appraisals must be performed during the inspection, and recorded on the appropriate appraisal worksheet for each unit. Refer to the appropriate crop handbook for appraisal instructions.

(2) **EXCEPTION:** If an inspection is being done shortly after the final planting date to determine if the crop has been planted by the final planting date and/or within the late planting period (if applicable), appraisals are not expected for this early inspection. However, the adjuster must obtain and record as much information as possible.

C GSI Form Standards and Completion Instructions

The following are the minimum items required for this form:

(1) **Title of Form, "Growing Season Inspection."** If using a PW to record this inspection, mark out "Production Worksheet" and write in "Growing Season Inspection."

(2) **Insured.** Name of insured that identifies EXACTLY the person (legal entity) to whom the policy is issued.

(3) **Unit Number.** Five-digit unit number from the Summary of Coverage after it is verified to be correct (e.g., 00100).

(4) **Crop.** Name of the crop.

(5) **Policy Number.** Insured's policy number.

(6) **Crop Year.** Crop year, as defined in the policy, for which the claim is filed.

(7) **Companion Contract**. If no other person has a share in the unit (insured has 100 percent share of a loss affected unit), MAKE NO ENTRY. If there is another person sharing in the crop that has a multiple-peril crop insurance contract, enter the name of the other person. If the contract is with the same AIP, enter same. If a different AIP insures the other person, enter the name of the AIP, if known.

(8) **Field ID.** The field identification symbol from the sketch map or aerial photo.

(9) **Acres.** The number of acres, to tenths (unless specified otherwise in the specific crop handbook) for the unit.

(10) **Share.** Insured's share in the crop, to three decimal places.

(11) **Practice.** Three-digit code number entered exactly as specified on the actuarial documents, for the practice carried out by the insured. If "No Practice Specified," enter the appropriate 3-digit code number from the actuarial documents.

(12) **Appraised Potential.** Per-acre appraisal of POTENTIAL production for the acreage appraised. Refer to the appropriate appraisal instructions in the applicable crop loss adjustment handbook.

(13) **Narrative.** Enter, "See attached GSI Report" and "aerial photo."

(14) **Adjuster's Signature, Code #, and Date.** Signature of adjuster, code number, and date of inspection.

(15) **Certification Statement.** Directly above the insured's signature block, the Certification Statement EXACTLY as shown in the most current DSSH, FCIC-24040.

(16) **Insured's Signature and Date.** Insured's (or insured's authorized representative's) signature and date: BEFORE obtaining the signature, REVIEW ALL ENTRIES on the Appraisal Worksheet WITH THE INSURED, (or insured's authorized representative) particularly explaining codes, etc., which may not be readily understood. If the insured refuses to provide his/her signature, enter "Refuses to provide signature" and further explain insured's refusal on a Special Report, if needed.

(17) **Form Number.** The form number assigned for this particular form (may include alpha characters in the form number.)

(18) **Privacy Act and Non-Discrimination statements**. These statements are required statements that must be printed on the form or provided as a separate document. The current Non-Discrimination Statement and Privacy Act Statement can be found on the RMA website at http://www.rma.usda.gov/regs/required.html or successor website.

Refer to the DSSH, FCIC-24040 for other crop insurance form requirements (e.g., point size of font, etc.)

D GSI Report Form Standards and Completion Instruction

The following are the minimum items required for this form:

(1) **Title of the form.** Show the title as "GSI Report."

(2) **Planting date (and replanting date, if replanted).** The date(s) the crop was planted and date(s) replanted, if the crop was replanted. If dates differ for fields, identify field and date field was planted and replanted, if replanted. When there is a reason to doubt the time of planting, (examples: (1) if the insured says the crop was replanted and you question whether it was replanted or whether this is actually the initial planting; or (2) when there is a poor stand and there appears to be no cause of loss that would have reduced the stand) obtain receipts for seed/plants and custom planting, if applicable. If all of the information cannot be obtained, explain why.

(3) **What kind of tillage methods has the insured carried out?** Record the tillage methods used and dates tillage was done. Obtain documentation. If all of the information cannot be obtained, explain why.

(4) **What kind of weed control practices are being carried out?** Record the methods, and if chemical control was used the name of the product used, the number of times used, and dates used. Obtain receipts and documentation for weed control and application when there is a weed problem. If all of the information cannot be obtained, explain why.

(5) **Has a current soil test(s) been taken on any of the insured acreage?** If yes, record the date of test and test results. If all of the information cannot be obtained, explain why.

(6) **How does the crop inspected compare with those in the general area?** If the condition of the crop being inspected differs from those in the general area, document differences.

(7) **What fertilizer program is being followed?** Record the type of program used. Record product names used and dates used. If a product was applied by a commercial firm, obtain the name of the firm. Obtain receipts for products and dates the product was applied if there is a poor stand or there are other signs of no or under fertilization of the crop. If all of the information cannot be obtained, explain why.

(8) **What insecticide/pesticide program is being followed?** Record the type of program used. Record production names used and dates used. If a product was applied by a commercial firm, obtain the name of the firm. Obtain receipts for products and application when there is an insect or pesticide problem. If all of the information cannot be obtained, explain why.

(9) **Weather conditions**. Briefly explain the weather in the past 4 to 6 weeks, the current conditions, and the long-range forecast for the area.

(10) **Is an irrigated practice insured on the crop unit being inspected?** If yes, record the type of irrigation equipment in place, whether equipment is functional and adequate, whether adequate irrigation water is available, and the amount of irrigation water applied and times applied to the crop, to date. If equipment or water is not adequate, explain why not. If all of the information cannot be obtained, explain why.

(11) **Should the producer's farming operation be reviewed at a later date?** Answer yes or no, and explain why or why not.

(12) **Remarks:** Briefly enter any other pertinent remarks; e.g., for perennial crops, whether practices necessary to protect the crop and/or move the crop toward maturity and yield upon which the guarantee is based has been carried out.

(13) **Adjuster's Signature, Code Number, and Date.** Signature of adjuster, code number, and date of inspection.

E Documentation on Aerial Photo Copy

On the aerial photocopy, clearly identify the following:

(1) Insured's name and contract number,

(2) Insured's farm and the field(s) inspected,

(3) Area in the field where the appraisals were taken,

(4) Any problem areas within the field(s), and

(5) Any field(s) of the same crop that border (a neighbor's field and the condition of that neighbor's field).

F GSI Report Package and Distribution

Attach together completed aerial-photo documentation, GSI Report, appraisal worksheet, GSI Form, and photo and/or video documentation. Distribute originals to the office designated by the AIP to maintain insureds' files of original documents and as otherwise instructed by the AIP.

72 PRE-HARVEST INSPECTION

A General Information

Pre-harvest Inspections are done as a quality assurance/control function to deter insureds from shifting or hiding production in order to create losses or create larger losses. It also serves to discover producers who are attempting to do this. By appraising all fields prior to harvest, the appraised production can be compared against the harvested production. If there are large discrepancies, it may be possible to use the appraisals to establish misrepresentation or as a key that further investigation is needed to establish the misrepresentation.

B Insured Entity is Broker, Packer, or Processor or SBI affiliated with Broker, Packer, or Processor

PRIOR TO HARVEST when a loss situation is probable or a notice of loss is filed, the AIP may want to consider completing a PRE-HARVEST inspection if it is determined the insured entity is affiliated with a broker, packer, or processor. If the insured entity has a SBI that is affiliated or in common with the broker, packer, or processor, a pre-harvest inspection is also recommended.

C How to Complete the Pre-harvest Inspection

(1) Do appraisals on all units of the crop.

(2) Record the inspection on a claim form and appropriate appraisal worksheets using the same instructions as for a preliminary inspection. Final claims can also be prepared during this inspection, if appropriate, by using the instructions for final claims in this handbook and appropriate crop handbook. Prepare one claim form for each unit.

(3) Identify somewhere in the heading of the claim form that this is a Pre-harvest Inspection, unless the unit is going to be finalized on this visit. Document any pertinent information in the narrative of the claim or on a Special Report.

(4) Post-Audit of Inspections

Any loss units submitted for payment that has harvested acreage will be compared against the pre-harvest appraisals. When there are significant discrepancies, the AIP will try to resolve these discrepancies with the insured. If these discrepancies cannot be resolved, AIPs may forward such cases to the appropriate FCIC Compliance Office for further review, action, or assistance.

73 ACREAGE REPORT REVIEW INSPECTION

Acreage Report Reviews are done as a part of quality assurance. AIPs should conduct field inspections for a percentage of its crop insurance contracts to verify the accuracy of the information certified on the acreage reports.

A During the inspection, verify the following:

(1) Insurable and not insurable acreage planted;

(2) Legal Descriptions;

(3) Shares (and shareholder's name);

(4) Practices;

(5) Types, classes, or varieties;

(6) Planting dates;

(7) Risk classifications;

(8) APH yields as listed on the appropriate forms;

(9) Unit arrangements; and

(10) Any other information contained on the acreage report pertaining to the reported crop or/and acreage; e.g., contract prices for peas, information provided in the remarks or attachment pertinent to the report, etc.

B Revised Acreage Reports. Revised acreage reports will be prepared when appropriate. (Refer to PAR. 29.)

C Recording the inspection. Record the results of the inspection on a Special Report or other form provided by the AIP.

74 CROP INSPECTION TO DETERMINE ACCEPTANCE OF MISREPORTED ACREAGE REPORT INFORMATION FOR INSURANCE

A This inspection can be initiated when the:

(1) Insured files a late-filed application (late-filed applications permitted only as specified in the CIH) and/or acreage report or wishes to add acreage that the insured had a share in at the time insurance attached but was initially not reported on the timely filed acreage report for the crop(s);

(2) AIP discovers that acreage in which the insured had an insurable share at the time insurance attached was under-reported, a unit(s) was not reported, or no acreage was reported by the insured or for the crop. (Refer to PAR. 32)

B Additional Information

(1) Acreage, for which the insured did not have a share until after the time insurance would have attached, cannot be insured under the insured's policy, unless specified otherwise in the Basic Provisions, crop provisions, or SPOIs.

(2) The following criteria also apply to crops covered under Crop Revenue Coverage, Income Protection, and Revenue Assurance.

C Crop Inspection

(1) The crop inspection will consist of an on-the-farm visit to determine the number of planted acres and to perform crop appraisals and make observations of the current general crop, soil, and weather conditions to determine if the planted crop acreage for the unit will produce at least 90% of the yield upon which the per-acre guarantee or per-acre amount of insurance is based.

(2) Refer to the Florida Fruit Tree Loss Adjustment Standards Handbook for specific instructions for crop inspections to accept or reject a revised acreage report to change the number of trees or other acreage information initially reported on the acreage report. (The liability for this crop is based on the number of insurable trees rather than insurable acres).

D Approval/Rejection

(1) If no cause of loss that could potentially create a loss situation has occurred (i.e., excess precipitation may have occurred but it did not create or has the potential

to create a loss situation) and the unit appraisal meets the appraisal requirements for accepting the unreported acreage or misreported information:

The approving official may accept (with the exception of subparagraph E below) or reject, by UNIT, at his/her discretion (based upon crop, soil, weather conditions, etc.) the unreported acreage when appraisals indicate that the crop acreage for the unit would produce at least 90% of the yield upon which the per-acre guarantee or per-acre amount of insurance is based. Unit acreage appraising below 90% of the yield will be rejected. The unit acreage for the purpose of crop-inspection appraisals includes the reported acreage and unreported insurable acreage. **Refer to exception in subparagraph E below**. Also, refer to B (1) above.

For example: if the reported acreage for unit 00100 was 90 acres but a field consisting of 80 insurable acres was omitted from this unit, the appraisal would be conducted for all 170 acres to determine if the unit acreage appraised at least 90% of the yield upon which the per-acre guarantee or per-acre amount of insurance was based. For unreported units, the individual unit acreage is comprised of all the acreage that could have been insured under the particular unreported unit. However, when there are unreported units involved, all units of the crop must be appraised until one unit fails or all units pass the criteria for accepting an unreported unit; refer to subparagraph E below.

(2) When there are insured shareholders involved, approval/rejection determinations are made independently of one another based on each policyholder's individual yield upon which their individual per-acre guarantee or per-acre dollar amount of insurance is based (e.g., approved APH yield) and whether the corresponding appraisal of each policyholder was at least 90% of their individual yield upon which their individual per-acre guarantee or per-acre amount of insurance is based. Therefore, it may be possible, if the insured shareholders have different APHs or different amounts of insurance, for one policyholder to meet the approval criteria and for one not to meet the criteria for approval.

E <u>Unreported Units</u>

(1) Units that the insured omitted from his/her timely submitted acreage report for the crop.

Unreported units CANNOT be added IF ANY reported insured unit for the crop at this time WILL NOT produce at least 90% of the yield upon which the per-acre guarantee or per-acre amount of insurance is based. When unreported units are rejected, the unreported unit procedure in PAR. 127 must be followed.

(2) Insured did not timely submit an acreage report for the crop, or timely reported insurable acres as zero for the crop when there were actually planted acres, which would be considered unreported unit(s). In these situations, since there were no reported planted acre units:

(a) The units that pass the crop inspection may be added, and

(b) Any unit of the crop that is rejected during the crop inspection is considered an unreported unit, and the unreported unit procedure in PAR. 127 must be applied.

F Recording the Appraisal. Record the appraisal on the appropriate Appraisal Worksheets for each unit of the crop being inspected. (Follow the appraisal and Appraisal Worksheet instructions (including insured and adjuster's signatures) in the applicable crop LASH for the crop being inspected);

G Inspection Report/Documents Submitted to AIP. Submit to the AIP, the original or revised acreage report prepared during the inspection, the appraisal worksheet, and a Special Report with the following information:

(1) Whether any significant damage has occurred on the unit, and

``

(2) Whether the appraisal for the unit acreage (reported and insurable unreported acreage) was at least 90% of the yield upon which the per-acre guarantee or per-acre amount of insurance is based can be expected under the current crop, moisture, and weather conditions.

H Notification of Approval/Rejection. Inform the insured that he/she will be notified in writing by the AIP of approval or rejection of the acreage.

75 INTEREST PAYMENT ON CLAIMS

A Policy Provisions

Unless otherwise specified, the Basic Provisions (or as applicable, crop policy) state that simple interest will be paid from the 61st day on the net indemnity after the insured signs, dates, and submits the properly completed claim, if the reason for failure to pay within 60 days is not due to the insured's failure to provide information.

B Interest Determined from Adjuster's or Approving Official's Signature

FCIC has identified the following types of claim situations on which interest should be paid from the 61st day of the adjuster or approving officer's signature date rather than the insured's signature date. The claim situations are as follows:

(1) Certification Form has been used on the unit.

(2) The insured is an absentee insured (adjuster will enter the date when the claim form was mailed to insured for signature in the narrative).

(3) Controversial or other unusual type of claim.

SECTION 2 VERIFYING THE CAUSE OF LOSS

76 GENERAL INFORMATION

A The causes of loss insured against are clearly identified in the individual crop provisions. Coverage of insured causes of loss must be due to drought, flood, or other natural disasters (as determined by the Secretary of Agriculture). Insured causes of loss, by crop, are listed in Exhibit 3.

B Adverse Weather. Many individual crop provisions list "Adverse Weather" as a cause of loss. Adverse weather consists of the following causes of loss: drought, heat, hail, excess moisture/precipitation, frost, freeze, cold winter, cold wet weather, flood,

wind/excess wind, hot wind, cyclone, tornado, hurricane/tropical depression, and other. However, (when adverse weather is applicable cause of loss) for analysis and statistical purposes, RMA requires that the claim form show what the specific adverse weather event was; e.g., excess precipitation, freeze, hail, etc., would be listed rather than "adverse weather." Exhibit 3 provides the codes for each of these causes of loss.

C Flooding caused by water contained by structures that are designed to contain a specific amount of water, such as dams, locks, etc., is not an insurable cause of loss as explained in PAR. 78 A (6). However, if flooding is a named insured peril in the crop provisions and due to excess precipitation, water spills over a containment structure (such as a dam) or there are controlled releases of water from the containment structure in order to mitigate flooding, any flooding downstream **is an insurable cause of loss**. For example, due to excess precipitation, the Army Corps of Engineers implements a controlled release of water from dams to relieve additional flooding.

D The insured must establish the cause of loss; the adjuster will:

(1) Verify the cause of loss during the on-the-farm inspection.

(2) Be satisfied that the damage or loss is due to one or more insured causes(s) of loss; e.g., drought CANNOT be an insured cause of loss for acreage with an irrigated practice; however, failure of the irrigation water supply due to drought would be an insured cause of loss under an irrigated practice. Each inspection must be an individual determination. If the cause of loss appears to be different from what the insured has stated, document the facts on a Special Report. For more information see Unusual/Controversial Cases in Part 4.

77 HAIL AND FIRE EXCLUSION

When hail and fire have been excluded as insurable causes of loss and hail or fire is determined to be the sole cause of loss, there generally will be no indemnity. Refer to the individual crop handbooks for instructions. Refer to verification requirements in PAR. 22.

78 UNINSURED CAUSES

A Causes of Loss Not Covered

As specified in the Basic Provisions, only unavoidable loss directly caused by specific causes of loss contained in the Crop Provisions are covered. All other causes of loss, except where the crop provisions specifically cover loss of revenue due to a reduced price in the marketplace, must be due to a naturally occurring event. All other causes of loss, including, but not limited to the following are NOT covered and are considered uninsured causes:

(1) Negligence, mismanagement, or wrongdoing by the insured, any member of the insured's family or household, or the insured's tenants, or employee;

(2) Failure to follow recognized good farming practices for the insured crop (for additional information refer to PAR. 121 K);

(3) Failure or breakdown of the irrigation equipment or facilities unless the failure or breakdown is due to a cause of loss specified in the crop provisions (if damage is due to an insured cause, the insured must make all reasonable efforts to restore the equipment or facilities to proper working order within a reasonable amount of

time unless the AIP determines it is not practical to do so. Cost will not be considered when determining whether it is practical to restore the equipment or facilities);

(4) Failure to carry out a good irrigation practice for the insured crop, if applicable;

(5) Any cause of loss that results in damage that is not evident or would not have been evident during the insurance period, including, but not limited to damage that only becomes evident after the EOIP unless expressly authorized in the crop provisions. Even though the AIP may not inspect the damaged crop until after the EOIP, damage due to insured causes that would have been evident during the insurance period will be covered; and

(6) Flooding. Flood damage from water that is contained by or within structures that are designed to contain a specific amount of water, such as dams, locks or reservoir projects, etc., on any acreage when such water stays within the designed limits. For example: A dam is designed to contain water to an elevation of 1200 feet but the insured plants a crop on acreage at an elevation of 1100 feet. A storm causes the water behind the dam to rise to an elevation of 1200 feet. Under such circumstances, the resulting damage would not be caused by an insurable cause of loss. However, if the insured planted on acreage that was above 1200 feet elevation, any flood damage caused by water that exceeded that elevation would be caused by an insurable cause of loss."

(a) Levees are not considered to contain water but rather levees channel the water; i.e., the levees keep water moving within a certain bound instead of actually holding it (containing it) at a certain location such as a dam for a reservoir would do.

(b) Some SPOIs specify the particular lake containing such water and require measurement by the Corps of Engineers (e.g., Marion county Iowa). Also, prevented planting coverage is not available on such acreage if the elevation of the contained water reaches or exceeds the land elevation (or denies access to) the insured acreage between the Sales Closing Date and the Final Planting Date shown on the SPOIs for the crop. Refer to the FCI-33, Maps and Rules Pages for additional information affecting the insurability of the land, if applicable.

(c) Verification Documentation

The adjuster must document the elevation of the contained water at the time of loss, as measured by the Corps of Engineers and/or other reliable public or governmental sources that measure such water elevations. The water elevations during the period of loss are to be obtained. (Some SPOIs require measurements be from Corps of Engineers). The adjuster/AIP must also document the elevation of the subject land for use as a comparison to the elevation of the contained water. To determine the elevation of the subject land, the AIP is responsible for obtaining maps or data containing the elevations for the acreage.

(d) There are several web sites offering topographical maps that provide land elevations. One such source is the United States Geographic Survey web site. There are also many other commercial sites that sell CD's containing topographical maps.

B Verification that cause of loss is uninsurable

During the on-the farm inspection, verification of whether the cause of loss is insurable or uninsurable must be made. When it has been verified that there is an uninsurable cause of loss it must be documented. Refer to PAR. 121 for additional details about verifying whether there are uninsured causes of loss.

79 ABANDON VERSUS NOT FOLLOWING A GOOD FARMING PRACTICE

There is a definite distinction between "not following a good farming practice" and "abandon."

A Abandon

(1) Basic Provision Definition of Abandon. "Failure to continue to care for the crop, providing care so insignificant as to provide no benefit to the crop, or failure to harvest in a timely manner, unless an insured cause of loss prevents the insured from properly caring for or harvesting the crop or causes damage to it to the extent that most producers of the crop on acreage with similar characteristics in the area would not normally further care for or harvest it.

(2) Acreage where the producer has stopped caring for the crop, at whatever stage, is considered to have been abandoned, regardless of whether the crop was otherwise damaged by an insurable cause of loss. There does not need to be an express intent to abandon the crop. The producer must simply have stopped all care for the crop, or the care provided must be so insignificant as to provide no benefit to the crop. An appraisal as stated in PAR. 85 (B) (10) below must be assessed when the crop is abandoned.

(3) Although rare, the insured may decide to harvest the abandoned acreage if there is production that can be harvested. If this happens, and the harvested production from the abandoned acreage is commingled with the harvested production from the acreage not abandoned, all of the harvested production from the abandoned acreage will be included in the production to count.

(4) A crop damaged to the extent that harvest is not practicable will not be considered as abandoned because the producer fails to harvest the crop. In these cases, the producer should provide a notice of loss and the acreage should be appraised. For "failure to timely harvest" to be considered as abandonment, the crop must be in a condition where harvest would be considered as a good farming practice and no condition exists which would make it physically impossible to harvest the crop, such as the ground is too wet.

(5) Insured turns in a notice of damage or loss after the act of abandonment

It must be considered abandonment if the insured stops caring for the crop PRIOR to providing notice of damage or loss and the time elapsed is such that the AIP cannot satisfactorily distinguish whether damage is solely from the insured cause or a combination of the insured cause and the abandonment.

(6) Insured abandons the crop for a length of time and then begins caring for the crop. If enough time has elapsed that the care is untimely and will not benefit the crop or the care is so insignificant that it does not benefit the crop, it is still considered abandonment as stated in (2) above.

B Not Following A Good Farming Practice

Acreage where the producer continues to care for the crop by performing all the practices needed to produce a mature crop, but does so inadequately, such as the application of an insufficient amount of fertilizer or herbicides, topping only a portion of the tobacco acreage, etc., will be considered not following a good farming practice. The amount of loss attributed to not following a good farming practice will be included as the production to count; i.e., an uninsured cause of loss appraisal. These determinations must be on a case-by-case basis. The AIP must first determine whether the necessary farming and cultural practices have been carried out by the producer and, if they have, whether they were adequate. Refer to PAR.'s 121 K and R for additional information.

SECTION 3 ACREAGE DETERMINATION

80 GENERAL INFORMATION AND METHODS

Determined acres are required on some preliminary claims and all final claims as specified in the crop handbooks. Determined acres must consist of ONLY insurable crop acres. Non-crop acres must also be measured so that this measurement can be deducted from the total measurement of the field, orchard, etc. Acreage measurements must only be made by the AIP, FSA, or a disinterested third-party measurement service. Refer to illustrated example in 81 C (6). Use the following procedures for determining acreage:

A FSA Measured Acres

(1) Acres measured through or during FSA spot check of the insured's certified acres for the current crop year, may be used as the determined acres if they are available at the time the claim is worked. If for some reason it is believed that the measured acres are incorrect, re-measure the acres.

(2) Permanent FSA-Crop Field Measurement Re-measured by FSA

If FSA re-measures a field that had been previously been measured in past crop year(s) solely because of obtaining new measurement equipment (or application of new measurement methods) and they are re-measuring all producers' fields, and the insured's field is re-measured after the time the insured reported the previously FSA-measured acres on his/her crop insurance acreage report, then: (1) The previous FSA-crop field measurement the insured reported will remain in effect for that crop year and will be the determined acres used by the adjuster to settle the claim, if any; (2) No corrected claim will be prepared when this situation occurs; and (3) The results of FSA re-measured acres, if different, will not be used until the subsequent crop year, unless PAR. 29 B (8) is applicable.

B Measurement Service

(1) If the insured has requested acreage measurement from FSA or a firm engaged in land measurement prior to the ARD and has submitted the documentation of the measurements as described in PAR. 29 E (1), the acres measured by the measurement service will be used as the determined acres, provided the measurement was performed by a person that has no conflict of interest as described in PAR. 8 B (17) and provided it is acreage to be used when irreconcilable differences occur, as stated in C below.

(2) Firms engaged in measurement service may include those operated by sales agents or firms in which the sales agent is associated. However, for loss adjustment purposes, acreage measurements performed by a measurement service operated by a sales agent or in which the sales agent is associated are not considered "measured acres" to use as the "determined acres" on the PW. Therefore, if the acreage has not been measured by FSA or the AIP and none of the items (reasons acreage must be measured) in subparagraph F apply, follow the procedures in subparagraph E "Acres not Measured." If the criteria in subparagraph E (1) have not been met and the acreage measured by the AIP or FSA is different than the reported acres, a MIF or LAF will not apply if the insured fulfilled all of their policy requirements for measurement service.

(3) If the measurement has not been completed by the ARD, the insured must submit estimated acres to the agent for the acreage report. As soon as the insured has received the measurement, the insured must submit it to the agent. The acreage report will then be revised to reflect the measured acres, unless the AIP or FSA has made a measurement of the acreage and there is a discrepancy. Refer to PAR. 29 F (1) for more information on discrepancies.

(4) If the insured fails to provide the measurement to the AIP:

(a) By the time a notice of loss has been filed with the AIP, the AIP must determine the acreage and make whatever adjustments are required by the Basic Provisions if the estimated acres reported are incorrect, UNLESS the insured and the AIP agree in writing to wait for the Measurement Service's measurement. No LAF or MIF will apply.

(b) By the premium billing date and there was no notice of loss filed (AIP made no acreage determinations), the AIP will base the premium on the estimated acreage reported by the insured. If the acreage measurement is later provided, the premium must be adjusted to reflect the actual acreage.

(c) For the crop(s) that was/were to be measured, then in subsequent crop years, acreage measurements for **ANY** crop CANNOT be accepted after the ARD from this insured. For example, in 2008, this insured requested acreage measurements for corn and soybeans but never provided the measurements to the AIP, then in 2009 the insured requests measurements for grain sorghum and dry beans. Even though the request was for different crops, the measurements CANNOT be accepted after the ARD because the insured failed to provide acreage measurements for a crop(s) in prior years. It also does not matter whether it is the same or a different AIP.

C <u>Differences Between FSA, Measurement Service, and/or AIP's Measurements</u>

Regardless of whether a measurement service is requested (e.g., difference is discovered during reconciliation process), the following applies:

(1) If there is a difference in measurements between or among FSA, the AIP, or a Measurement Service Firm, an effort shall be made to reconcile these differences.

(2) If there is an irreconcilable difference between:

(a) The acreage measured by FSA or a measuring service and the AIP's on-farm measurement, the AIP's measurement will be used.

(b) The acreage measured by a measuring service, other than the AIP's on-farm measurement, and FSA, the FSA measurement will be used.

D Previously Measured Acreage

(1) Use acres that have been previously measured for the current crop year by:

(a) FSA as described in A or B above unless the AIP chooses to measure the acres for the current crop year or believes the measurement is incorrect, or by other measurement service as described in B above.

(b) Another AIP (measurement of a companion contract) unless it is felt that measurement is incorrect.

(c) Because discrepancies between FSA's and AIP's acreage measurements may have to be reconciled at a later date, it is recommended that AIPs verify with the FSA whether actual measurements of the acreage being inspected have been made, and if actual measurements have been made, to use those measurements. HOWEVER, if the AIP believes the FSA measurement is incorrect and re-measures the acreage or chooses to make their own measurement and finds that their measurement is not in agreement with FSA's, the AIP should try to resolve the difference with FSA.

(2) Prior year(s) measurements of a field that was measured by an AIP, local FSA office, or firm engaged in land measurement services, will be used if the acres have not been measured for the current crop year, provided the:

(a) entire field is planted to a single crop (same practices or types if there are separate guarantees), and
(b) field boundaries have not changed.

If there is reason to suspect that the measurements are not accurate, the acres must be re-measured as described in F below.

E Acres Not Measured

If measured acres as described in subparagraphs A or D are not available, acreage has been measured by a measurement service firm owned or operated by the sales agent or in which the agent is affiliated, or no measurement service has been requested as stated in subparagraph B, then the following applies:

(1) The acres reported on the Crop Insurance Acreage Report may be considered "determined acres" for claim purposes, IF the:

(a) insured has signed the acreage report indicating certification of the reported information; AND

(b) the adjuster can determine through visual inspection of the acreage and with the use of FSA certified acreage reports or aerial photo copies, (obtained from the local FSA office or other acceptable sources), landmarks, etc., that the acreage would measure within 5 percent of the acreage reported on the acreage report.

(2) If the adjuster measures the acres because the adjuster does not believe the reported acres would be within the 5 percent tolerance, the measured acres must be used even when the measured acres are within the 5 percent tolerance.

EXAMPLE 1: The insured reports and certifies100 acres planted. The adjuster believes the acreage would measure more than 105 acres. The adjuster measures the acreage to be 104 acres. The 104 acres must be used as the determined acres even though it is within the 5 % tolerance. Therefore, the insured has under-reported acres and all production from the 104 acres will be applied to the liability for the 100 acres the insured reported.

EXAMPLE 2: The following is an example of a situation where the reported acreage is within the 5 percent tolerance, but cannot be used as the determined acreage:

- Previous measurement = 80 acres (field boundaries have not changed).
- Crop insurance acreage report = 80 acres of corn.
- Entire field planted to boundaries, but about 2 acres are oats.

In this instance, the reported acres cannot be used as the determined acres. Either an actual measurement must be made (e.g., wheeled) OR because the reported acreage is within the 5 percent tolerance, the acreage can be determined as follows: estimate the oat acreage and deduct from the reported corn acreage. Determined corn acres = 78 acres (80 - 2 = 78).

F <u>When AIP Must Measure Acreage</u>

Acreage must be measured (or re-measured, as applicable) IF it fails to meet the criteria described in A, B, C or D above OR if any of the following apply:

(1) Part of a unit is released and that part released will lose its field identity (i.e., there will be no way to establish the amount of acres at the time of a final loss inspection because of the loss of field identity);

(2) Part of a field has been harvested and the rest of the field has not. In this case, the acres of the harvested and unharvested portions of the field must be determined by the adjuster's actual measurement[1/].

(3) Part of the fields in the unit has been harvested, and part of the fields in the unit has not been harvested. Individual measurements of each field are not available for the crop year. In this case, the acres of the harvested and unharvested fields must be determined by the adjuster's actual measurement.[1/]

[1] Measuring the entire field and measuring either the harvested or unharvested portion (or planted, unplanted, or PP portion, if applicable) of the field and subtracting that amount from the entire field measurement is acceptable. Additionally, if the field has a permanent measurement, only one of the portions of the field need be measured.

(4) Part of the field is planted and part of the field is claimed as PP acres. The PP acres in the field must be measured and the planted acres must be measured if there is a loss on the planted acres unless there is a need to estimate acres as allowed in PAR. 80 I below. [1/]

(5) The AIP or the insured has reason to question the accuracy of the measurement or does not agree with the previously measured acres;

(6) Field boundaries have changed;

(7) Only a portion of a field is planted and measurements for determining the planted portion are unavailable[1];

(8) Acreages of varying practices, types, appraisals, etc., (as appropriate to separate on the claim) are not separated; or

(9) When there are non-crop acres, so that this measurement can be deducted from the determined acres in the field, orchard, etc.

G Acreage Measurement of Perennial Crops

(1) **Must Be Land-Acre Measurements**

All acreage measurements for perennial crops will be based on land acres (i.e., planimetered, wheeled/taped, GPS, etc.) with deductions for non-crop areas, except as allowed in subparagraph 3. Within the land-acre measurement method, tree/vine/bush acres may be used to determine acreage for limited situations. To determine tree/vine/bush acreage, the tree/vine/bush spacing(s) and number of trees/vines/bushes must be determined/verified. Non-crop acreage must be determined in the same manner as when land-acre measurements are employed. When blocks/groups of trees/vines/bushes are removed, the acreage is measured/determined and then deducted.

(2) **How to Make Land-Acre Measurements**

(a) Measure around the outside of each block/plot of trees/vines/bushes based on the spacing within row and between rows.

(b) For the length, measurements should extend beyond the end of the rows, by ½ the within-row spacing, from the center of the outside plants on the end of the rows. However, where a road forms an orchard boundary, the measuring point will be ½ the spacing between tree rows not to extend past the center of the road.

[1] Measuring the entire field and measuring either the harvested or unharvested portion (or planted, unplanted, or PP portion, if applicable) of the field and subtracting that amount from the entire field measurement is acceptable. Additionally, if the field has a permanent measurement, only one of the portions of the field need be measured.

(c) For the width, measurements should extend past the outside row of each block/plot by ½ the distance between rows.

EXAMPLE: An orchard has 15' x 25' spacing, or an average of 15 feet between trees (center of tree to center of tree) within row and 25 feet between rows (center of tree to center of tree). Measurements would begin ½ of 15' (7.5') from the middle of the trunk of the end tree in the outside row extend ½ of 25' (12.5') from the outside row, using the same spacing and around the entire block (7.5 feet beyond the ends of the rows and 12.5 feet beyond the outside rows, referred to as the drip line).

(3) **Use of Tree/vine/bush Acreage Determination Rather Than Land-Acre Measurements**

(a) Tree/vine/bush acreage determinations are acceptable for the following situations:

1 There are different ages and/or types, varieties, or other characteristics for different T-Yields, and/or interplanted crops within a particular tract of measured acreage. The sum of the parts must be equal to the measured acreage.

2 Acreage reduction due to reduction in stand caused by disease, natural occurring weather-related events, or man-made events that occur prior to insurance attaching. Such acreage reduction is made WHEN the reduction was NOT made prior to the acreage being reported for the current crop year, and:

a It is required by the SPOIs; or

b When the AIP determines the reduction in stand is significant (refer to CIH for more information).

For claims purposes, an acreage reduction is not made for the current crop year when the reduction in stand occurred after insurance attached.

The insured is subject to a MIF if the insured failed to report the reduced stand on the Producer's Pre-Acceptance Worksheet for the current crop year so the AIP could reduce the acreage as outlined above. In the situation of over-reported acreage, A MIF only applies when the initial liability was over-reported in excess of 10% as specified in PAR. 21 D.

3 There are irregular shaped fields if the acreage has not been previously measured and FSA aerial photography that identifies the acreage is NOT available at the local FSA office.

4 The acreage consists of irregular terrain (such terrain is not conducive to accurate wheel/tape measurements) and if:

a Such acreage has NOT been previously measured, and

b FSA aerial photography that identifies the acreage is NOT available at the local FSA office.

(b) Refer to Exhibit 19 for instructions and calculation formulas for making tree/vine/bush acreage determinations for various planting patterns and the CIH and/or SPOI for acreage adjustments when significant reductions in percent stand are applicable.

H Measurement Methods

(1) Acreage measurement for loss adjustment purposes must be performed by using:

(a) the measuring wheel, or

(b) FSA-accepted measuring methods or devices used with aerial photos that are to scale (such as: polar planimeter, digitizer, or scale rule).

(2) Surveying devices, global positioning systems (GPS), remote sensing devices used in conjunction with aerial photos or satellite imagery, etc., may be used if accuracy is comparable to the measurement methods listed above.

I When Measurement Estimates Are Allowed

Acreage breakdowns WITHIN a UNIT or field may be estimated if a determination is impractical. (Some situations where acreage might be considered impractical to measure (but not limited to) are the following: flooded portion of a field; numerous potholes within a field; a levy breaking and resulting in removal/destruction of border(s) of the field or delineation of portion of the field planted and portion prevented from planting.) Document why acreages could not be measured, and also explain how the estimated acres were determined in the Narrative of the claim form or on a, Special Report. Total acreage for the field or unit however, must be determined in accordance with the procedures in subparagraph A-H above.

J Documentation. Document, in the narrative of the claim or on a Special Report, the method of acreage determination and any calculations used to arrive at the determined acres; e.g., "Acreage wheel measured - Field A - 215.0 W X 180.0 W = 38.7 acres; Field C - 220.0 W X 185.0 W = 40.7 acres; Total unit acreage - 38.7 + 40.7 = 79.4 acres, or in the case of determined acres via the acreage the insured certified to on his/her MPCI acreage report; “Determined acres using MPCI acreage report-would measure within 5 percent.”

81 WHEEL MEASURING METHOD AND FORMULAS

A When measuring with a measuring wheel:

(1) Determine the basic lines of linear measurements needed to calculate the acreage. Refer to subparagraph D below for examples of basic measurements (and Combinations) required.

(2) Begin each linear measurement with the revolution counter turned to indicate all "0's." If the wheel has a white spoke, start with the white spoke on the ground and the counter at "0."

(3) Walk in a straight and direct line. Do not lift the wheel off the ground or allow the wheel to skip or bounce. If an obstacle (to the wheel) is encountered directly in the path, grasp the wheel with the handle shaft (so that the wheel will not turn in relationship to the handle), and move at a right angle to clear the obstacle. Place

the wheel on the ground and wheel forward enough to clear the obstacle. Again, grasp the wheel and the handle shaft to immobilize the rotation, walk at a right angle again in order to be directly in line with the original path of measurement, and continue making the measurement.

(4) Note the position of the handle. It must be in the same position when being set to zero, as it is when it is read, at the end of the linear measurement. Additionally, at the end of the linear measurement, if the wheel has a white spoke, count the number of spokes past the last whole revolution of the white spoke, and add to the counter reading. Each spoke past the white spoke, is one-tenth of a wheel. Round according to procedure for the crop being measured.

(5) Non-crop acres must also be measured so that this measurement can be deducted from the total determined acres, provided they have not already been deducted from the determined acres; e.g., the measurement of a permanent field is with the deductions for non-crop acres. Refer to C (6) below.

B Converting Square Wheels to Acres. When converting square wheels to acres, move the decimal three places to the left; i.e., 38700 square wheels = 38.7 acres. (1000 square wheels equals one acre.)

EXAMPLE: 1.0 chain = 10.0 wheels = 66.0 feet
1.0 wheel = 6.6 feet

C Wheel Measuring Formulas

For any of the following field formulas, if the crop acreage being measured is for Fresh Market Peppers, Fresh Market Tomatoes (Dollar Plan), Fresh Market Tomatoes (Guaranteed Production Plan), or Processing Tomatoes, see the applicable crop LASH for additional measurement instructions.

(1) **Square or Rectangular Field Formula**: Length (wheels) x Width (wheels) = Square wheels. (Move the decimal point three (3) places to the left to determine the acres).

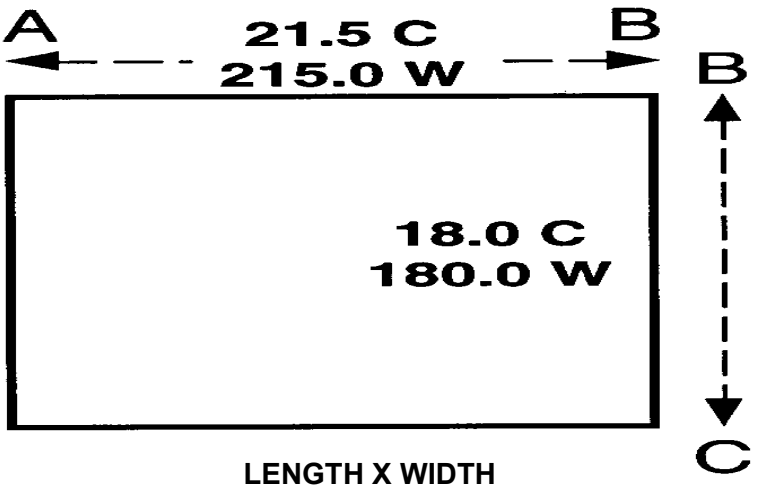

215.0 X 180.0 =38700
38.7 ACRES

LENGTH X WIDTH

(2) **Triangular Field Formula**: Base (Wheels) x Height (Wheels) ÷ by 2 = Square Wheels. (Move the decimal point three places (3) to the left to determine the acres)

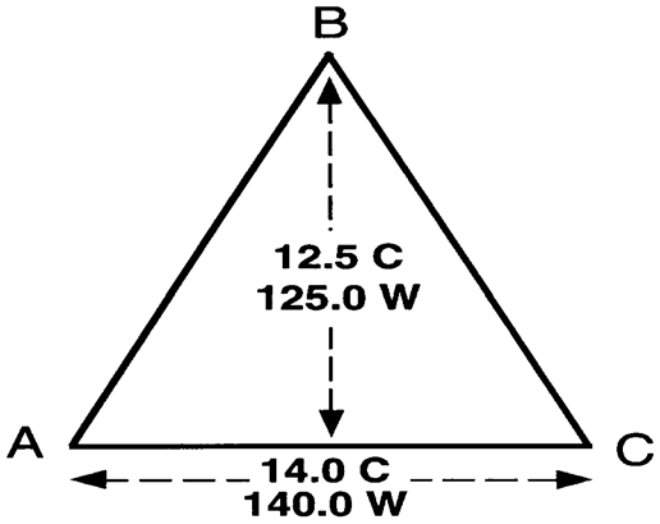

$$\frac{140.0 \text{ X } 125.0}{2}$$

= 8750
8.8 ACRES

BASE X HEIGHT

(3) **Circular Field Formula**: Diameter (Wheels) x Diameter (Wheels) x .7854 = Square Wheels (Move the decimal point three (3) places to the left to determine the acres).

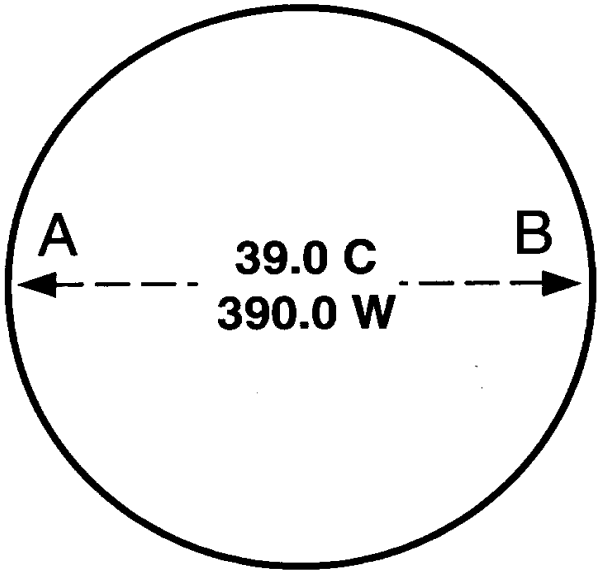

390.0 X 390.0 = 152100
152100 X .7854 =119459.34
119.5 ACRES

DIAMETER

(4) **Irregular Field Formula**: Length (Wheels) x Average Width (Wheels) = Square Wheels (Move the decimal point three (3) places to the left to determine the acres).

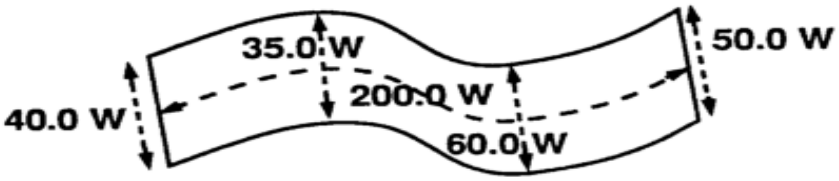

AVERAGE WIDTHS X LENGTH 40.0 + 35.0 + 60.0 + 50.0=

185.0 ÷ 4 = 46.25
46.3 X 200.0 = 9260
9.3 ACRES

(5) **Combination Field Formula**: When a field will not conform to any regular formula, measure the field into regular pieces to determine the acreage.

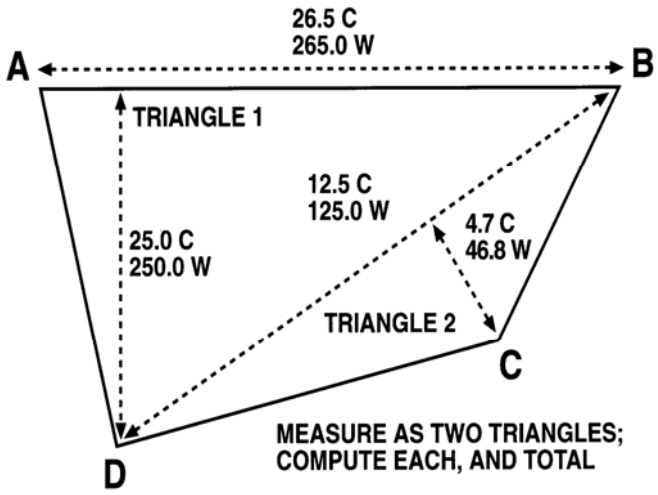

TRIANGLE 1

$\frac{265.0 \text{ X } 250.0}{2}$ = 33125 = 33.1 ACRES

TRIANGLE 2
$\frac{125.0 \text{ X } 46.8}{2}$ =2925 =2.9 ACRES

TOTAL ACREAGE = 33.1 + 2.9 = 36.0 ACRES

*** (6) **Deductions From Acreage**: If any amount of acreage in a field is not planted to the crop it must be deducted from the total acreage in the field.

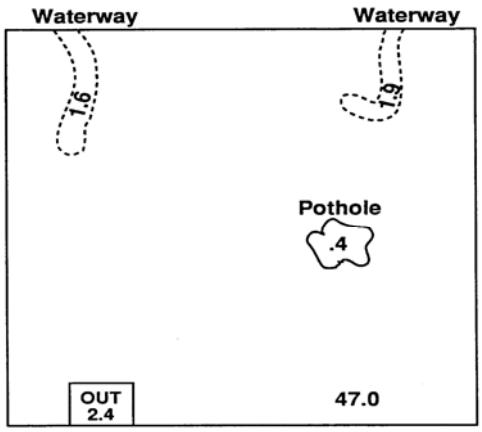

Field 47.0 acres MINUS deduction of 6.3 acres = 40.7 insurable acres.

82 DETERMINING INSURED ACRES FROM SKIP-ROW PLANTING PATTERNS FOR ALL CROPS (EXCEPT COTTON)

A General Information

Except for the crops and counties listed in subparagraphs A (1)-(3) below, skip-row planting is NOT an established practice contained on the county actuarial documents, and an Unrated Practice, Type or Variety (TP) Written Agreement is required to insure skip-row planted acreage of an otherwise insurable crop. Skip-row planting patterns are insurable without a Written Agreement for the following crops:

(1) Tree, bush, and vine crops normally planted in 40.0" row, subject to any applicable policy row-spacing limitation.

(2) Cotton in all counties with a cotton insurance program.

(3) Grain Sorghum, including but not limited to the following Texas counties: Andrews, Concho, Fisher, Jones, Mitchell, Runnels, Scurry, Taylor, and Tom Green. Contact the RMA Regional Office concerning insurability of skip-row planted acreage in other counties.

B Skip-Row Planting Pattern Determinations for Irrigated and Non-Irrigated Practices For All Crops Except Cotton

For cotton planted in skip-row planting patterns, refer to the Cotton Loss Adjustment Standards Handbook and Exhibit 17 of the CIH for the procedures. **For all crops (except cotton), follow the procedures listed below:**

For skip-row planted non-irrigated corn, refer to Bulletin PM-09-002 to determine whether these procedures are applicable.

(1) Acreage determinations and qualifying skip-row planting patterns must agree with the FSA rules.

(a) If the skips in any skip-row planting pattern are too narrow to meet the FSA requirements for a skip-row planting pattern, the entire area is considered devoted to the crop (i.e., solid-planted).

(b) For crops planted in qualifying skip-row planting patterns, the acreage of the crop will be the planted portion of the field as defined by FSA (i.e., qualifying skip-row acreage converted to solid-planted acreage). The planting pattern established on the final planting date is used for determining the solid-planted acreage for the MPCI acreage report, claim, and APH yield for subsequent crop years.

(c) Acreage planted in qualifying skip-row planting patterns is converted to solid-planted acreage by using the current FSA percent planted factors in the Table in subparagraph (3) below. Subparagraph (4) below explains how to use the Table. For any row widths and planting patterns or varying row widths and planting patterns not listed in the Table in (3) below, contact the applicable county FSA office for the correct percent-planted factor.

(2) APH Determinations For All Crops Except Cotton

(a) Separate APH data bases are required for acreage planted in skip-row planting pattern and for those solid-planted.

(b) Actual yields from acreage planted in qualifying skip-row planting patterns that are reported for the crop year must be calculated by dividing the production by the solid planted acres; i.e., skip-row acreage converted to solid planted acres. (Yield conversion factors do not apply to the acreage planted in qualifying skips.)

(3) FSA Percent Planted Table

Cropping Definition	**Row Width**	**Percent Planted to Crop**
1 planted 1skipped	40 inch	50.00%
1 planted 1 skipped	36 inch	55.56%
1 planted 1 skipped	32 inch	62.50%
1 planted 1 skipped Double at the Turn	36 or 40 inch	55.56%
2 planted 1 skipped	30 to 40 inch	66.67%
2 planted 2 skipped	30 to 40 inch	50.00%
3 planted 1 skipped	30 to 40 inch	75.00%
3 planted 2 skipped	30 to 40 inch	60.00%
4 planted 1 skipped	30 to 40 inch	80.00%
4 planted 2 skipped	30 to 40 inch	66.67%
4 planted 4 skipped	30 to 40 inch	50.00%
5 planted 1 skipped	30 to 40 inch	83.33%
5 planted 2 skipped	30 to 40 inch	71.43%
6 planted 1 skipped	30 to 40 inch	85.71%
6 planted 2 skipped	30 to 40 inch	75.00%
7 planted 1 skipped	30 to 40 inch	87.50%
7 planted 2 skipped	30 to 40 inch	77.77%
8 planted 1 skipped	30 to 40 inch	88.89%
8 planted 2 skipped	30 to 40 inch	80.00%
Other patterns	FSA Rules	FSA Rules

(4) Using the table above, determine the skip-row pattern in which the crop is planted and the row width of the crop to determine the percent planted to the crop.

Multiply the total acreage of the field by the applicable percentage in the “Percent Planted to Crop” column to determine the “solid planted” crop acres.

FOR EXAMPLE: The field measures 100.0 acres and the skip-row planting pattern is 1 row planted and 1 row skipped with a 40 inch row width. This would equal 50.0 acres of planted crop (100.0 x.50 = 50.0 planted acres)

SECTION 4 ESTABLISHING PRODUCTION

83 GENERAL INFORMATION

A Insured's Requirements. The insured is required, by the policy, to keep complete records of planting, replanting, inputs, production, harvesting, and disposition of the insured crop on each unit for three years after the end of the crop year (This requirement also applies to all such records for acreage that is not insured). The insured must make these records available to the AIP, any employee of USDA authorized to investigate or review any matter relating to crop insurance.

Except as stated in PAR 105, records of production kept from combine monitors are not acceptable for production records for loss purposes.

B Establishing Total Production on Damaged Units

The adjuster establishes total production for each damaged unit from appraisals of unharvested production, appraisals for uninsured causes, prorated production from unreported units, measuring farm-stored production, and from verifying harvested production from the insured's records, as described in the following subparagraphs for the type of disposition. The TOTAL production for the entire damaged unit is the insured's production share plus the production share of each person sharing in the unit. If the insured has not kept acceptable records separate by unit (whether stored, fed, or sold), the production is considered commingled. Refer to PAR. 126.

C Establishing Total Production from Non-Loss Units

Obtain and document an estimate of production per acre for each undamaged unit of the indemnified crop from the insured or the insured's authorized representative and record as instructed in the crop handbook.

D Insured's Request of Measurement of Stored Production When Crop Damaged

The insured is responsible for providing separate records of production for each unit and for notifying the AIP for measurement of production when production from another unit, crop year, or uninsured acreage is to be added to existing production in a single storage structure. (Refer to PAR. 70.) If the inspection indicates that separate records have not been kept for each unit, refer to PAR. 126 for commingled production. Also, refer to PAR. 126 if production from more than one practice/type, which has separate APH yields, has been commingled.

E Determining and Recording Production

Accurately determine and enter in the appropriate column(s) of the claim the amount of established production for the entire damaged unit including production from unreported unit(s) if applicable (refer to subparagraph F below). Enter the unit number and estimated production for each undamaged unit on the claim (Refer to the individual crop handbook for specific instructions).

F Accounting for Production from Unreported Units

Production from unreported units discovered at loss time will be counted. Refer to PAR. 127 for specific instructions.

84 VERIFYING TOTAL PRODUCTION - APPRAISED OR HARVESTED

A General Instructions

Be aware and watch for certain problems while on the farm verifying the information you have collected, such as (but not limited to), the following:

(1) Unreported production or acreage. If you are measuring one bin and notice another bin with the same type of grain that the insured has not informed you of, question the farmer to see where the grain was produced. If the explanation does not seem reasonable, document and notify your supervisor.

(2) Unjustified difference in production. If one farm produced 100 bushels of corn per acre and across the road the farm produced only 30 bushels per acre, determine if there is a justifiable explanation. Refer to PARs. 118 and 119 regarding written and pictorial documentation.

(3) Unjustified difference in quality. If there are differences in the quality of the insured's production from other units of the crop or from other producer's that cannot be justified with consideration of the insured cause of loss, document and contact your immediate loss supervisor for further instructions. Retain such documentation in the insured's loss file.

B In determining if total HARVESTED production is correct, check:

(1) Representative samples of (unharvested) crop (RSCs):

(a) Left intact in a harvested field for evidence of yield cause of loss, whether good farming practices were employed, quality of mature crop released to go to other use, etc.; i.e., stand, number of bolls or burrs, stage of maturity, size of stalk, plant population, etc. (Insured's may be required to leave RSCs, as specified in section 14 (a) (3) of the Basic Provisions and crop provisions).

(b) If required intact RSCs were not left by the insured or were harvested before the field was inspected, examine the stubble, size of the stalk, amount of straw stubble, etc., to judge whether the amount of production turned in by the insured is reasonable.

(2) With the insured when the amount of crop production submitted by the insured for the unit appears questionable (e.g., from visual inspection of RSCs, it appears the per-acre appraisal would be significantly higher than the production records submitted by the insured or the per-acre production is not comparable or reasonable for the area and/or acreage, etc.):

(a) Question the insured to determine if there could be missing tickets, fed production, production from this unit that was sold in another person's name, missing production records for commercially stored production, forgotten farm-stored production in another location, etc.

(b) If the insured cannot provide missing tickets, other records, or information as stated in (2) (a) above and there are RSCs intact, complete a per-acre production appraisal from the RSCs and/or compare per-acre production amount submitted by the insured to comparable acreage production to

discuss with the insured. To compare comparable acreage, use comparable acreage from the insured's farming operation. However, if there is no comparable acreage available in the insured's farming operation, use comparable acreage from other neighboring farms. Comparable acreage is acreage that is planted to the same crop, following the same farming practices, management practices, similar planting dates, etc. If comparable acreage is not available from the insured's operation or from neighboring farms, refer to PAR. 121 L (2) (c). If production is still questionable, refer to subparagraphs C and D.

(3) The harvested fields to determine whether there is an excessive amount of production remaining on the stalk, stem, ground (cracked, fallen, or discarded by the harvest equipment) etc., due to malfunctioning or improperly adjusted harvesting equipment, rather than due to an insured cause of loss (such as lodging due to storm damage). Any excessive amount of production that is left in the field that could have been harvested and would have been counted as production to count if harvested, must be included on the claim form as an uninsured cause appraisal.

(4) Other farming operations of the insured.

(5) The productive capacity of the land (i.e., is the land in a low swamp area or is the land highly fertile and dry?).

(6) For the presence of livestock or poultry to determine whether any of the current year's production has been fed. Also, refer to PAR. 92 for more information pertaining to fed production.

(7) For the location and quantity of a crop retained for seed, or which has been sold for seed.

(8) Where the production is stored or sold, when production is questionable and the insured farms in surrounding counties.

(9) Whether the insured shares with a tenant/landlord. Refer to detailed information in subparagraph C below.

C <u>Another Person Sharing in the Crop</u>

The crop provisions specify the production guarantee and production to count are determined on a total unit basis. Therefore, all production to count for the unit (including all the production owned by the various shareholders and quality that applies to the individual shareholder's production dependent upon its disposition) must be included when calculating the unit indemnity with the share applied at the end of the calculation.

When another person is sharing in the crop:

(1) You must verify that all of the actual production for the entire unit(s) has been reported, (i.e., all production owed by the insured and various shareholders).

(2) You must verify and make production determinations of the other person's production share as you would the insured's production share; i.e., if the other person's production is farm stored, storage measurements must be made as specified in PAR's 104, 105, or 110, whichever is applicable for the situation.

When the other person sharing in the unit is uninsured, do not establish the total production for the unit by establishing the uninsured shareholder's production share based on the insured's production amount and share percentage, unless you are unable to establish it by any other means and the resulting total production for the unit is reasonable. If this should happen, document the circumstances preventing the measurement of the uninsured shareholder's share of the production, if farm-stored, or the reason the insured cannot obtain copies of the settlement sheets of the uninsured shareholders sold production along with other needed information/documents of the uninsured shareholder's sold production. Generally, the fact that the uninsured shareholder's share of farm-stored production is located in another storage structure at some other location is not a justifiable reason for determining the total unit production as stated above without making an attempt to obtain permission to make actual determinations of the uninsured's shareholder's share.

(3) A claim for indemnity may be completed once the final disposition of the crop and any applicable quality adjustment factors (refer to (4) below for information regarding uninsured shareholders) are determined for all production to count within the unit, **EXCEPT:**

(a) In the case where the quality provisions are in the SPOIs and the production falls under Section C 3e of the quality adjustment provisions in the SPOIs, the claim cannot be processed until the adjuster can verify that all shares of the unit production is sold, destroyed, or fed or used by the shareholders.

(b) In the case where the quality provisions are in the crop provisions and the production falls under section 15 (j) of the Basic Provisions (may be different section in CRC or RA Basic Provisions), the claim cannot be processed until the adjuster can verify that all shares of any unsold production is destroyed by all the shareholders.

(4) When the other shareholder is uninsured and the insured producer is unable to obtain the necessary information from the uninsured shareholder regarding the disposition of the production (e.g., if sold or not sold. If shareholder's production is sold, the shareholder's settlement sheet for the share unit(s) showing the reduction in value applied by the buyers), to determine the QAF for the shareholder's share of the production, such production is considered undamaged.

(5) If the other person(s) share is insured through another AIP, refer to the procedure for companion contracts in PAR. 25.

(6) Refer to PAR. 96 for more detailed information and examples. Also refer to Exhibit 20 for examples involving crops with quality provisions in the SPOIs.

D <u>Amount of Production Reported for Unit(s) is Questionable</u>

Anytime the actual production reported is in question and you are going to meet with the insured about the questionable reported production follow the individual AIP's instructions regarding the meeting.

E <u>Documentation</u>. Prepare a Special Report if there:

(1) is unreported production, or

(2) are unjustified differences in production between different shares or different units.

F Adjuster's Signature. DO NOT sign a claim if there is any evidence of additional production that has not been accounted for.

85 APPRAISALS

A General Information

Appraisals must not be made until an accurate appraisal of potential production can be made.

(1) If during an inspection any crop acreage is not going to be carried to harvest and an accurate appraisal of potential production CANNOT be made, do not release acreage to another use or to replant when replant payment is applicable until an accurate appraisal can be made OR representative sample areas are left for later appraisals as described in subparagraph C below and PAR. 88.

(2) If the inspection is performed at a time when production can be determined accurately by appraisal and the crop is not being carried to harvest (except when Pre-harvest Appraisals are required), appraise the production by unit, and grant written consent to put insured acreage to another use. Record this production on an appraisal worksheet and a Special Report, if needed. Refer to applicable crop handbook for appraisal methods.

B Appraisals are made when:

(1) The insured requests consent to put acreage to another use or to replant to the same crop originally planted if a replant payment will be claimed.

(2) The insured chooses not to harvest all of the acreage.

(3) The insured plans to use a crop in such a way that it will not be possible to determine production after harvest. Some examples, but not limited to, are:

(a) High-moisture grain that will be mechanically packed in an open pit;

(b) A crop insured as grain (e.g., grain sorghum or corn) that will be partially or all cut for silage;

(c) Corn that will be cut and ground for corn and cob meal or cut for earlage. Earlage is high moisture corn grain, cobs, husks, and in some cases, a portion of the stalk that is cut and ensiled; and

(d) Silage or forage that will be packed in ag bags.

There are no acceptable measurement calculations formulas to determine silage or forage packed in ag bags. If a pre-harvest appraisal is not done before the crop is utilized in a manner that does not allow an accurate determination of the amount of production, the full guarantee must be assessed on any acreage from which this production was harvested.

(4) The crop will be stored in such a manner that production cannot be measured, (e.g., high-moisture corn or silage stored in an airtight structure). If a pre-harvest appraisal is not done to determine the production-to-count, the claim must be denied because the insured does not have verifiable records of the stored production in the absence of the AIP being able to verify the actual harvested production in the structure by measuring the production in the structure.

(5) The insurance period ends for a crop. The appraisal will establish the potential production of the unharvested acreage at the time the insurance period ceases.

(6) Late-filed acreage is requested or unreported acreage is discovered (to determine acceptance or rejection of such acreage).

(7) An unreported unit (not reported on the acreage report) is discovered, and it is suspected or known that it will not be harvested or harvested and stored in such a manner that production cannot be accounted for. Refer to PAR 127 for more information on unreported units.

(8) The insured insists on replanting, but it is determined it is too late to replant. See PAR. 65 for more information.

(9) When the insured notifies the AIP that production is going to be stored in an oversized storage structure (a size larger than used in normal farming operations, such as commercial sized structures), the AIP may choose to do a pre-harvest appraisal to determine the production to count for the units of production that will be stored in the structure rather than determining the production to count after the production is put into the storage structure, provided the insured agrees to this. If the AIP does not perform a pre-harvest appraisal, the production stored in such a structure must be measured. (Also, refer to PAR. 104.)

(10) Uninsured causes of loss are determined if acreage is destroyed without consent, abandoned, or if the insured has failed to provide production records that are acceptable. Acreage damaged solely from uninsured causes or if any of the other aforementioned reasons exist in this item, not less than the per-acre production guarantee for the acreage involved will be assessed.

The definition for abandon in the Basic Provisions indicate that when the crop is not timely harvested, it is abandoned; however, exercise good judgment in establishing that a crop that has not been **timely harvested** is truly abandoned. Refer to PAR. 79.

(11) An unharvested portion of the insured field or subfield (or orchard or sub-orchard, etc.) remains after harvest or production that could have been removed from a harvested insured field or subfield (or orchard or sub-orchard, etc.) that was not removed due to improperly functioning harvesting equipment, windrows of crop not all picked up; cherry picking (refer to definition in Exhibit 1) an orchard, etc. This does not include unharvested representative sample area of the crop the insured has left in accordance with policy requirements, unless the areas represent a significant portion of the acreage. Refer to PAR. 67 E (2).

(12) If the policy provisions, SPOIs, or a Written Agreement authorizes direct marketing, conduct an appraisal within the time frame stated in the applicable policy that will be used to determine production to count for production that will be sold by direct marketing.

C Deferred Appraisals

Deferred appraisals are appraisals that are deferred to a later date in order to assess crop recovery and/or obtain more accurate appraisals.

(1) Appraisals must be deferred when:

(a) Hail damage or damage from blowing sand has occurred on **IMMATURE** crops. Defer appraisals 7-10 days from the date damage occurred, unless specified otherwise by agricultural experts in the area for the crop or as otherwise specified in the individual crop handbook. If agricultural experts in the area specify less days are needed to determine damage to the particular crop, written documentation of this must be retained in the insured's loss file; i.e., name of agricultural expert, date, written statement from the agricultural expert specifying the number of days to defer appraisal, etc. Refer to Exhibit 1 for definition of agricultural expert.

(b) Frost/freeze damage has occurred on immature crop. Defer appraisals at least 7-10 days from the date of frost/freeze, unless specified otherwise by agricultural experts in the area for the crop or as otherwise specified in the individual crop handbook. If agricultural experts in the area specify less days are needed to determine damage to the particular crop, written documentation of this must be retained in the insured's loss file; i.e., name of agricultural expert, date, written statement from the agricultural expert specifying the number of days to defer appraisal, etc. Refer to Exhibit 1 for definition of agricultural expert.

(c) A crop is in dormancy. Defer appraisal until at least the time the crop is out of dormancy. Refer to (3) below.

(d) For spring-seeded crops where insufficient soil moisture has affected seed emergence and the insured requests acreage to go to another use, appraisals must be deferred until at least 8 days after the late planting period (15 days after the final planting date if no late planting period applies.) None of the acreage in the field(s) can be released until the appraisals are completed. The seed must have been planted at least 15 days prior to release for a final indemnity. Use the stand reduction appraisal method.

(2) Defer appraisals anytime a more accurate appraisal can be made at a later date due to type of damage or circumstances; e.g., extent of damage or recovery of crop after flooding, pollination problems, freeze, etc. Refer to (3) below.

(3) Utilize agricultural experts for the crop for the length of time appraisals should be deferred for the particular crop and situation. Include a copy of these recommendations with the paperwork pertaining to the inspection to support the AIP's actions. Refer to Exhibit 1 for the definition of agricultural expert.

(4) Unless specified elsewhere (as in (1) (d) above), the deferred appraisal may be made from RSAs (as specified in PAR. 88) when (a) or (b) below are applicable and provided the insured agrees to leave and maintain the representative sample areas as described in PAR. 88.

(a) The insured needs immediate release of the crop acreage in order to be able to put it to the other use the insured intends to put it, or to replant it; or

(b) Due to heavy workload the AIP has no adjusters available to make a field inspection to release the acreage within the timeframe needed to replant it or put the acreage to another use (such as planting to another crop).

(5) In widespread deferral situations, all AIPs should maintain coordination through Insurance Services so that uniform guidance can be provided to all AIPs regarding the length of deferral time necessary to allow accurate appraisals to be made for the circumstances.

D When appraisals are made, inform the insured of the following:

(1) The method used to determine potential production and how the appraisal will be used if an indemnity is claimed. If at all possible, the insured or an authorized representative of the insured should accompany you on the entire appraisal. Encourage the insured or authorized representative to participate in determining the appraisal.

(2) Appraisals on acreage for which the AIP has given consent to be put to another use are final when the claim is signed by the insured or insured's authorized representative and the adjuster, unless such acreage is:

(a) not put to another use before harvest becomes general in the county and is reappraised by the AIP,

(b) further damaged by an insured cause and is reappraised by the AIP, or

(c) harvested.

For this reason, DO NOT finalize a claim until you are satisfied with all determinations. Refer to PAR. 67 H.

(3) The appraisal determination. (Never advise the insured whether or not to harvest the crop; this must be the insured's decision.)

E Approved Methods. The appraisal methods for the crop are identified in the individual crop handbooks.

F Harvested Representative Sample Appraisals

(1) Appraise mature production by arranging with the insured to harvest representative areas, if possible. The representative areas are selected by the adjuster, harvested, and appraised at the same time rather than being appraised at a later date, as discussed in PAR. 88 Adjusters can use PAR. 88 D (1) (a) as a guide for the number and location of representative areas. Adjusters must be present when the representative areas are harvested, and the harvested production from these areas will be used to determine the **unharvested appraised** yield per acre.

(2) Record the appraised yield per acre in Section I of the column entitled “Appraised Potential” of the PW, as “UH” stage for the number of acres of unharvested acres

this appraisal represents; e.g., if the appraisal from the harvested representative samples represents an appraisal for 80 acres, the stage code for the 80 acres is "UH," not "H." Or, the PW may show the actual acreage harvested with an "H" stage code; e.g., 80 acres were to be appraised, and out of the 80 acres, the insured harvested 1.0 acre for appraisal purposes, the PW could be completed showing 79.0 acres with "UH" stage code, and 1.0 acre with "H" stage code.

G New Appraisals for Additional Damage

If an insured notifies the AIP of additional damage after consent to put acreage to other use and requests re-inspection, a new appraisal may be made provided the additional damage was due to an insured cause of loss and the acreage has NOT been put to another use.

H Unable to Mechanically Harvest

(1) General Procedure.

(a) When crop acreage which is routinely mechanically harvested is damaged by INSURED cause(s) to the extent that it can NEVER be mechanically harvested with normal harvest equipment, no production will be counted for such acreage. If mechanical harvest is feasible with normal harvest equipment on any portion of the unharvested acreage, appraise and count only the production that you determine could have been mechanically harvested. **However, if the insured elects to hand harvest, such as handpick corn, or use specialized harvesting equipment, the harvested production will be counted**.

(b) Wet field conditions or snow covered fields that prevent harvest of the crop by the EOIP does not mean it can NEVER be mechanically harvested with normal harvest equipment. This is only a temporary condition. Likewise, the fact that it would cost more to harvest the crop than the crop is worth does not constitute that the insured is unable to mechanically harvest the crop.

(c) **Examples of insured causes that could result in the insured being unable to mechanically harvest the crop.** Hurricane, tropical depression, or tornado damage has rendered the crop unharvestable with normal harvesting equipment or small grain that has been drought-stressed may be so short that it cannot be mechanically harvested with the normal harvest equipment in the area. For grain height too short to harvest with normal harvesting equipment, the adjuster must establish and document the individual cutting height based on the terrain (rocky soil, level field, terraces, slopes, etc.) and the insured's farming practices (type of harvesting equipment, swathed grain, etc.). Remember, insureds employing good farming practices will lower the combine headers or swather bars to recover a short crop to the maximum extent possible.

(2) Determination and documentation

(a) Determine (on an individual basis) whether any portion of the acreage can ever be mechanically harvested with normal harvest equipment and if the reason is due to an insured cause. Consider what other insured and noninsured growers in the area are doing with the same crop, similar soil

and terrain, or equipment (whether owned or otherwise available to the insured).

(b) Determine whether the insured did or could have made every reasonable effort to harvest such acreage, and whether the insured plans to hand harvest or use specialized harvesting equipment.

(c) If it is difficult to determine what potential is machine harvestable, arrange with the insured to harvest representative areas of the crop. Use this production to determine the production to count.

(d) Document your determinations that the crop cannot be mechanically harvested including documentation requirements shown in subparagraph J. Photographs or videos showing the condition of the crop, terrain, etc., are a necessary part of the documentation to support determinations of zero ("0") appraisals which are made under these procedures.

(e) If it is determined that the crop cannot be harvested with normal harvesting equipment and the insured does not elect to hand pick or use specialized harvesting equipment, a Certification Form must be signed by the insured with the following statement in the body of the Certification Form: "As indicated by the insured's signature below, the insured certifies that the damaged acreage that cannot be mechanically harvested with normal harvest equipment will not be harvested. If the crop is harvested after this certification, the insured understands he/she may be subject to the misrepresentation provisions in the crop insurance policy." Attach the Certification Form to the claim.

I Number of Samples Needed When Appraising 1st Crop Acreage in a Field and It Is Known that Part of the Field Will Be Planted to Second Crop

If it is known a certain part of a field will be or will probably be planted to a second crop, sub-divide the field into the area that will be planted to a second crop and that which will not. Use the number of samples required by the applicable crop handbook based on the number of acres in the subfield.

J Zero Appraisal Documentation

All acreage that has zero yield appraisals or areas of non-emerged seed in the field (not just skips of non-emerged seed between emerged seed), regardless of the reason of the zero yield appraisal (e.g., unable to mechanically harvest as stated in subparagraph H above, no potential production is on the plants, etc.), must be thoroughly documented with a completed appraisal form as instructed in the crop handbooks, along with photographs, and/or videos of such acreage. When the reason for the zero appraisal is non-emerged seed, the adjuster must verify that the crop seed was initially planted through visual subsoil inspection). Refer to PAR. 119 for instructions on proper documentation of the photos or videos.

86 APPRAISAL METHOD VARIATIONS

A Appraisal Modifications

The AIP's authorizing official may authorize the use of any appraisal modifications listed in the crop handbooks **without prior approval from RMA.** However, the use of the modification cannot begin until the AIP has notified RMA's Risk Management Services Division (RMSD). AIP's are to notify RMSD via e-mail at RMA.RMSD@rma.usda.gov and provide the following in the e-mail: A copy of the written authorization stating the modification, documentation of the field condition that warrants an appraisal modification, effective crop year, area affected, and effective beginning and ending dates. RMSD will then in turn notify other AIPs, RMA PASD, RMA Risk Compliance, and the affected RMA ROs and CFOs.

B Appraisal Deviations

(1) Appraisal deviations **require** the RMA's written authorization after receiving approval from RMA's PASD and/or RMSD, and consist of deviations that are necessary to apply to the standard appraisal method in order to provide an accurate determination of crop potential under the circumstances.

(2) The AIP will immediately notify RMA's PASD and/or RMSD of the situation with a recommendation and justification, before proceeding. Notify RMSD via e-mail at RMA.RMSD@rma.usda.gov and PASD at DirectorPDD@rma.usda.gov with the following: the deviation recommended, the effective crop year, area affected, and beginning and ending dates for which the deviation is to be applied.

(3) RMSD will:

(a) Immediately advise the affected RMA RO of the situation;

(b) Coordinate the recommendation with the appropriate AIPs; and

(c) Assess the need for and impact of the deviation.

(4) Upon receiving written authorization from RMA, the AIP will issue written authorization to use the approved deviation, and ensure the proper implementation and monitoring of the deviation.

87 APPRAISALS INVOLVING AVERAGE ROW-WIDTH MEASUREMENTS

When appraisal instructions in a specific crop handbook require an average row-width measurement to be used in determining sample selections AND where rows are skipped to form a skip-row planting pattern or for tractor and planter tires (except for cotton, use the respective cotton handbook instructions for skip-row patterns), determine the "average row width" as follows:

- Measure across one entire pattern;
- Count the number of planted rows; and
- Divide the total distance measured by the number of rows measured across.

See Example on next page.

EXAMPLE:

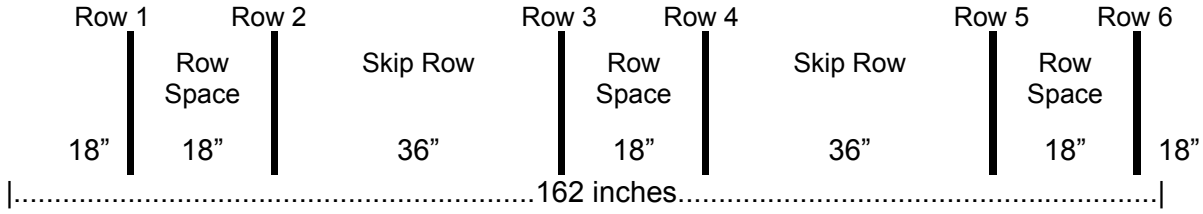

162 inches ÷ 6 rows = 27 in. average row width

For other types of row-width measurement instructions, see the individual crop handbook.

88 REPRESENTATIVE SAMPLE AREA (RSA) APPRAISALS

DO NOT CONFUSE PAR. 88 procedures with the policy provisions that require the insured to leave representative samples of the unharvested crop if the insured reports damage less than 15 days before the time the insured begins harvest or during harvest, referred to as RSC’s in this handbook as stated in PAR. 4 and PAR. 84.

A General Information

(1) RSAs are areas of a field that the AIP authorizes the insured to leave when the insured wants immediate release of the field to go to another use, replant, etc., but the appraisal cannot be made at this time for one of the reasons stated in subparagraph B below. Appraisals from the RSAs of the unharvested crop acreage is made at a later date to determine the per-acre appraisal for the entire unharvested acreage.

(2) If the insured put acreage to another use and left RSAs prior to notifying and receiving approval from the AIP to put the acreage to another use and to leave RSAs, the acreage put to another use is considered destroyed without consent, and the AIP must assess an uninsured cause appraisal of at least the per-acre guarantee for such acreage. There are no exceptions for not assessing an uninsured cause for at least the per-acre guarantee in this situation.

B RSAs are used when any of the following apply:

(1) Heavy workload situations exist and timing is critical to give consent to put acreage to other use or replant.

(2) Deferred appraisals are required, as stated in PAR. 85, and the insured desires immediate release of the acreage in order to put acreage to another use or to replant acreage.

(3) Insured’s disagreement with the initial appraisal of the acreage to be released, and the AIP agrees to allow the insured to leave RSAs, as described herein. When this is done, some crop provisions state that the RSAs must be left and properly cared for until the crop has matured. **However, if the AIP determines there is no insured cause of loss present when the producer requests acreage to be released to be put to another use (e.g., grazing), then no deferred appraisal will be allowed. The insured must decide whether to take the appraisal, carry the crop to harvest, or in the case of short-rated**

wheat or barley, take the short rate and graze or destroy the acreage by mechanical means as stated in the SPOIs.

(4) Such sample areas are otherwise required by the policy (e.g., for grain deficient corn.

C General RSA Requirements

(1) Before AIPs can authorize insureds to leave RSAs of production for appraisal purposes, the AIP must have received the insured's agreement to the items in D (1)-(2) below. The agreement must be:

(a) **In writing for IMMATURE production** (except the agreement may be a verbal agreement when the insured is requesting to replant acreage and subparagraph C (3) below applies).

(b) **Either verbally or in writing for MATURE production.** However, if the **adjuster** selects the RSAs while on the first on-the-farm inspection, the agreement in writing must be obtained. (Corn insured as grain to be cut for silage can be considered mature production for the purpose of granting the insured authorization to leave RSAs.).

(2) The adjuster must select the RSAs during the adjuster's first on-the-farm inspection of the field(s) to be released, unless it is **EXCEPTED,** as outlined in (3) below.

(3) **EXCEPTION to Adjuster's First on-the-farm Inspection:**

(a) General Information

This exception is to be authorized only when there is a heavy workload and the insured cannot afford to wait until the time an adjuster can make an on-the-farm inspection to make appraisals before the insured can replant or put the acreage to another use or crop**. AIPs must not authorize this exception on a routine basis and are not to authorize this exception unless there is a known cause of loss in the area that could have damaged the crop acreage.** If there is not a known cause of loss, an adjuster must make an on-the-farm inspection.

(b) **THE EXCEPTION**

AFTER the insured has **agreed** (verbally or in writing as stated in C (1) above) to all the criteria in D (1) below:

AIPs, on an insured-by-insured basis, may authorize the insured verbally to leave RSAs and to authorize the insured to:

1 Replant damaged acreage or

2 Take acreage of crop production (immature or mature) to another use.

Authorization shall ONLY be provided by individuals authorized by the AIP to do so. **AIPs cannot authorize sales agents, agency employees, or sales supervisors to provide this authorization to the insured.**

D Insured's Agreement

(1) The insured must agree to the following:

(a) To leave at least the minimum number of representative RSAs (as stated below) of the minimum size and specified locations, per field, as stated in subparagraph E below;

Minimum Number of Representative Sample Areas (RSAs) Table	
ACRES IN FIELD OR SUBFIELD	**MINIMUM NUMBER OF RSAs**
.1-10.0	1
One additional RSA is required for each additional 40.0 acres (or fraction thereof) in field or subfield.	

(b) To not move the selected RSAs;

(c) To **LOCATE** the RSAs **IN REPRESENTATIVE AREAS** of the field with the beginning side of the RSA **NOT less than 20 feet from the edge of the field;**

Refer to example below.

Example: RSAs (10 ft. wide, length of field). RSA on the left is the 20 ft. minimum a RSA can begin from the edge of the field. The RSA on the right is greater than the 20 ft. minimum the RSA can begin from the edge of field

↔ 20 ft. from edge of field	↔ RSA 10 ft.	20 acre field NOT TO SCALE	↔ RSA 10 ft.	↔ 40 ft. from edge of field

(Exception: If in the case of contour or strip farming (subparagraph E (1) (b) 1 b), the minimum 20 ft. that the RSA can begin from the edge of the field is not practical because of the narrow width of the strip or contour, the AIP may allow less than the 20 ft. minimum, with proper documentation).

(d) To care for the RSAs in the same manner as if they were to be harvested and this care must continue until the areas are appraised;

(e) When released acreage is to be grazed, to protect the RSAs from livestock by fencing or an equally effective barrier that is acceptable to the AIP. The fencing or effective barriers must remain in place until completion of the appraisal; and

(f) That production for the acreage released will be determined from appraisals from the RSAs (without adjustments for quality if at the time the crop acreage is released, the crop is immature), unless the insured fails to comply with the agreement.

(2) In addition to the items in D above, the agreement must also contain:

(a) What the consequences will be if the insured fails to comply with the agreement, as follows:

1 When the **reason** the **RSAs** are established **is OTHER THAN** the AIP allowing the insured to leave RSAs because **the insured disagrees** with the **initial appraisal**:

a If the insured **fails to meet** the **criteria in** subparagraph **D (1) (a)-(e)**, then an **uninsured cause appraisal of at least per-acre guarantee** of the crop released will be assessed.

b If the insured satisfies the requirement for the location of minimum number of samples in subparagraph D (1) (c) above, but fails to leave an RSA or RSAs the minimum size as stated in subparagraph E, (e.g., the RSA did not extend the entire length of the field as required in E (1) B 1 a), then **an uninsured cause appraisal** of **up to at least the per-acre** guarantee of the crop released will be assessed.

2 When the **reason** the RSAs were established **is because** the AIP allowed the insured to leave RSAs when **the insured disagreed with the initial appraisal**:

The initial appraisal will be used.

(b) If the acreage is released for grazing, the type of fencing or other effective barrier with which the insured agrees to surround the RSA until the completion of the appraisal has taken place;

(c) The locations and size of the RSAs to be left in each field either on a sketch map or aerial photos;

(d) The signature and adjuster code number of adjuster authorizing the agreement.

(e) The date the adjuster released the acreage and authorized the RSAs.

(f) Phone number(s) of adjuster (or adjuster's claim supervisor) that the insured can easily reach if they have questions regarding the preparation and maintenance of the RSAs;

(g) Signature date and signatures. If the insured is allowed to leave RSAs without the adjuster physically selecting the RSAs during an on-the-farm visit, as allowed in subparagraph E, and a signed agreement is still required (i.e., immature production), follow these instructions for signatures:

1 Signed Agreement via E-mail.

a Insured (or insured's representative) is to type his/her name in the signature block followed by "signed via e-mail" (e.g., John Jones signed via e-mail) and fill in the date signed.

b Instruct the insured (or insured's representative) after he/she has filled out the signature block to save the document and e-mail back to the e-mail address provided by the adjuster.

c If the adjuster is in agreement with the signed version the insured (or insured's representative) has e-mailed back, the adjuster will fill in the signature, signature date, and adjuster's assigned code number, save, and e-mail this version back to the insured. Refer to (4) below for instructions regarding insured's and AIP's copies.

2 Signed Agreement via Fax or mail

Insured signs and dates in signature block and faxes back to the fax number provided by the adjuster. If the adjuster agrees with the information the insured has provided on the form, he/she signs, dates, and enters his/her assigned adjuster code and faxes or mails back to the insured. If the adjuster is sending the approved copy to the insured via U.S. Postal Service, notify the insured of the approval via e-mail or telephone, and that the signed hard copy of the agreement will follow. Refer to (4) below for instructions regarding insured's and AIP's copies.

(3) Adjuster Documentation

When the Exception in subparagraph C (3) applies because of workload and verbal agreements are executed as allowed in C (1), the adjuster must document the following information and retain in the insured's file folder:

(a) The insured's verbal agreement to the items for which the insured must agree and any information required to be provided to the adjuster, as listed in D above,

(b) The insured's understanding of the consequences (stated in D (2) (a) above) if the insured should fail to comply with the items in D (1).

(c) The reason for the immediacy of the release,

(d) Authorization method (by phone, fax, etc),

(e) Date the adjuster released acreage and authorized insured to leave RSAs.

(f) The signature and code number of the adjuster providing the authorization.

AIPs cannot authorize their sales agents, agency employees, or sales supervisors to provide this authorization to the insured.

(4) Insured's and AIP's Copies

(a) When an agreement in writing is done, provide the insured with a written copy of the agreement in writing (including any attachments and e-mails) signed by the insured and AIP representative, and leave the original in the insured's file folder.

(b) When a verbal agreement is done, provide (via mail, e-mail or fax) the insured with a copy of the information to which the insured agreed, as shown in subparagraphs D and E, as well as the information provided to the adjuster, as outlined in (3) above.

E Required Size and Location of RSAs

Unless stated otherwise in an individual crop handbook, the size and location of RSAs for all crops except perennial crops are stated below. For perennial crops, use the instructions in the respective perennial crop handbook.

(1) Select at **least the minimum number of representative** RSAs of the crop (per field) as required in D (1) (a) above and that:

(a) The beginning side of the each RSA is located not less than 20 feet from the edge of the field and RSAs are representative of the acreage to be appraised;

(b) Are at **least** the size described in 1 or 2 below. The AIP may choose either the method shown in 1 or 2 below:

1 Each RSA is a s**trip that follows the entire length of the field and that is at least 10 feet wide. The RSA must be wide** enough to ensure that the potential appraisal areas from which the appraisal will be extracted will not be exposed to damage in excess of what would be experienced had the crop around the RSAs remained intact (e.g., excessive drying, insect, or weed infestation, grazing, etc.). Appraisal samples must not be taken in the same area within the RSA; move down or up the strip for each sample.

***

a If acreage is in a center pivot, use 2 below so that irrigation can continue without wasting irrigation water or power to operate the equipment; i.e., the RSA is as wide as the irrigation boom so it will allow an ample RSA without wasting irrigation water or power as would happen if a 10 foot strip following the entire circumference of the circle was irrigated.

b When acreage has been released for grazing and the only access the livestock has to a permanent structure containing water (e.g., pond, lake, etc.) is through the field, a small break (no more than a 30-foot break) in the length of the RSA may be left for the livestock to pass through, provided the ends of the break are also fenced.

2 The width and length of each RSA must accumulatively reflect the minimum size stated in (1) (b) 1 above (i.e., the square feet of each RSA is equivalent to the square feet of 10 feet wide X length of field). Each RSA must be:

a Wide enough to accommodate the equipment that will be used to maintain the crop (i.e., sprayer with a 30-foot boom, six- row cultivator, etc.) with the equipment used to care for the crop up to the time the crop would be appraised; and

b Large enough to ensure that all sides of the potential areas from which the appraisal will be extracted will not be exposed to damage in excess of what would be experienced had the crop around the RSAs remained intact (e.g.; excessive drying, insect or weed infestation, grazing, etc.)

(c) Will enable, at least, the minimum recommended number of samples stated in the crop handbook to be selected on a proportional basis to the acreage represented. Refer to example below for an explanation of what samples to be selected on a proportional basis means.

EXAMPLE: The minimum RSAs required are five for the acreage being appraised. The adjuster has determined that splitting the field into subfields is inappropriate because although one-third of the field is in uniformly satisfactory condition and two-thirds of the field is in uniformly poor condition, the respective portions are randomly scattered across the field. To maintain the proper proportionate sampling as it relates to damage, six RSAs are to be utilized instead of five, two in the satisfactory areas and four in the poor areas. The number of samples to maintain a proportionate sampling may be taken from less than six RSAs if four samples of the sample size stated in the appropriate handbook can be obtained in the poor areas and two from the satisfactory areas.

F Adjuster's Instructions for First On-the-Farm Inspection

(1) Select the RSAs in accordance with subparagraphs D (1) (a) and E above. Identify for the insured the selected RSAs by flags, physical markings, or sketch map to protect the integrity of the RSAs. In all cases, document the location of

the selected RSAs in the field(s) on an aerial photo or on a sketch map and the agreed upon fencing or protective barrier that the insured intends to use.

(2) Explain to the insured all items in the insured's agreement, as shown in D (1)-(2), and the consequences if the insured failed to meet these requirements as explained in D (2) above.

(3) Provide the insured a copy of the agreement as stated in subparagraph D (4). Leave the original in the insured's file folder.

G Appraisals of RSAs

(1) When the adjuster makes the on-the-farm inspection to make the appraisal, the adjuster must verify that the insured has complied with the agreed upon provisions, as described above. If the insured has failed to comply with any of the criteria outlined in D (1) (a)-(e), apply the applicable appraisal as stated in subparagraph D (2) (a) 1 or 2.

(2) **Obtaining appraisal samples from the RSAs:** Samples must not be taken in the same area within the RSA and **must not be taken on the outer edges of the RSA.** For example: (1) If the RSAs are strips as outlined in E (1) (b) 1 above, move down or up the strip for each sample; or (2) If RSAs are areas as outlined in E (1) (b) 2 above, take the samples from random areas of the RSA.

(3) **RSAs of IMMATURE Production Left for Deferred Appraisals Solely for the Initial Appraisal of Released Acreage:**

(a) Appraisals MUST be completed as soon as the production to count can be ACCURATELY determined (no earlier than 7-10 days after damage due to hail or frost/freeze, or the number of days specified by an agricultural expert if it differs from the 7-10 days.

(b) **The following is not applicable to crops having stages, such as onions or to (3) below:**

1 At the time the RSAs are appraised, any production damage due to an insured cause that has occurred must be considered, including losses due to revenue (if applicable for the crop), but **NOT quality for the acreage released.**

2 **There would be very few circumstances that would justify allowing the crop in the RSAs to become fully mature prior to completing the appraisal.** If there was a justifiable reason to allow the crop in the RSAs to become fully mature prior to completing the appraisal:

a Document the reason why the crop was allowed to become fully mature and keep a copy in the insured's loss file.

b If there was quality damage to the crop in the RSAs, quality adjustment of appraised or harvested production from the acreage in the RSAs can be applied, but cannot be applied to the appraised production for the released acreage.

(4) **RSAs of Corn INSURED AS SILAGE Established To Determine Grain Deficient Silage When Appraisals Cannot Be Made Before Corn Is Cut for Silage Due to AIP Workload**

Appraise these areas as soon as possible. Additional production damage after the date the corn was harvested as silage will not be considered an insured cause of loss even if the damage was from a named peril in the policy. This is because the crop was harvested for the use for which it was insured (silage), and the insurance period ended at the time the crop was harvested; i.e., the corn was cut for silage. The appraisal of the RSAs will determine whether the corn met the criteria for grain-deficient silage. If the silage was put in an airtight structure, the RSAs can also be used to determine the production to count. Apply uninsured cause appraisals as if RSAs were not properly cared for in accordance with subparagraph D (2) (a), and for any damage that occurred after the corn was harvested as silage.

(5) **RSAs Established Solely Because Insured Disagreed With Initial Appraisal of Immature Crop Acreage to be Released:**

Several crop provisions, including canola, coarse grains, cotton, dry beans, ELS cotton, small grains, sugar beets, and sunflower seed crop provisions state that when the insured disagrees with the initial appraisal of the crop acreage the insured wishes to be released, the AIP may agree to release the acreage and

use RSAs for appraisal purposes. The appraisal of the RSAs will be deferred until the time harvest would have occurred.

(a) If the insured has complied with the criteria outlined in D (1) (a)–(e):

1 Any additional production damage to the RSAs due to a named peril in the policy will be considered an insured cause of loss, including revenue losses. However, damage due to quality will only be allowed as stated in 2 below.

2 The per-acre production appraisal will be used for all the acreage released, including RSAs. Adjustments for quality cannot be applied to the appraised production for the released acreage. However, adjustments for quality can be applied to the amount of MATURE production specifically from the RSAs since the RSAs have to be left intact until harvest time. If this is applicable, a two line entry is required on the claim form; i.e., one line for the acreage of the released acreage and one line for the acreage of the RSAs.

(b) If the insured did not comply with the criteria outlined in D (1) (a)-(e):

1 Use the initial per-acre production appraisal (without adjustments for quality) made prior to giving consent to put the acreage to another use.

2 Apply this per-acre production appraisal (without adjustments for quality) to all of the released acreage as well as the acreage in the RSAs.

(6) **RSAs of a Mature Crop for Initial Appraisal When Insured Requests Release of Acreage to Put To Other Use or Crop and Due to Heavy Workload, the AIP Cannot Appraise the Acreage Prior to the Time the Acreage Needs to Be Released**

(a) AIPs are to allow RSAs for this use prudently. This procedure is ONLY to be used when for the other use to which the insured wishes to put the crop or acreage, it is essential the acreage is released prior to the time the AIP can appraise the acreage. The insured still must agree to all of the criteria in 88 D above before RSAs can be used.

(b) Appraise the RSAs as soon as possible. If the insured has complied with the criteria in D (1) (a)-(e), the per-acre appraisal from the harvested production will be used. Since the crop was mature at the time the RSAs were established, quality can be applied. If the insured did not comply with the criteria in D (1) (a)-(e), then follow the procedures in D (2) (a).

89 BYPASSED ACREAGE

A General Information

Bypassed acreage procedures are applicable only to crops under a processor contract that must be harvested within a certain timeframe to be acceptable by the processor;

*** and have the definition of “Bypassed Acreage” within their crop provisions; e.g., green peas, processing beans, processing pumpkins, processing tomatoes, and processing sweet corn. Sometimes such acreage is bypassed by the processor for reasons that have nothing to do with an insurable cause of loss that is preventing or delaying harvest.

B Definition of Bypassed Acreage

Bypassed acreage is defined as "Land on which production is ready for harvest but the processor elects not to accept such production so it is not harvested."

(1) Inspections must be made by the AIP on all unharvested acreage of insured crop to verify the cause of loss and the reason the acreage was bypassed by the processor.

(2) Appraisals are not required on acreage bypassed due only to an insurable cause of loss. Appraisals will be made on all unharvested acreage when any uninsurable cause of loss prevented timely harvest of the crop.

C Documentation From Insured of Why Acreage Was Bypassed. The insured must provide acceptable documentation of the reason the acreage was bypassed. Failure to provide such documentation will result in the AIP's determination that the acreage was bypassed due to an uninsured cause of loss.

D Bypassed or Not Timely Harvested Due to Insured Cause. Production losses from unharvested, not timely harvested, or bypassed acreage of the insured crop are insurable if the losses are due to an insurable cause of loss (as stated in the crop provisions), such as adverse weather conditions. Adverse weather includes, but is not limited to:

(1) Excessive moisture that prevents harvesting equipment from entering the field or that prevents the timely operation of harvesting equipment; and

(2) Abnormally hot or cold temperatures that cause an unexpected number of acres over a large producing area to be ready for harvest at the same time, affecting the timely harvest of a large number of such acres or the processing of such production is beyond the capacity of the processor, either of which causes the acreage to be bypassed.

Refer to the applicable Crop Provisions for notice of damage requirements. The insured should contact the AIP immediately upon being notified that acreage will be bypassed so an inspection by the AIP can be made, but not later than the time specified in the crop provisions.

E Bypassed or Not Timely harvested Acreage Due to Uninsured Cause. Insurance coverage is not provided on any loss of production if acreage is not timely harvested (unless such delay in harvesting is solely and directly due to an insured cause of loss) or is bypassed due to:

(1) breakdown or non-operation of equipment or facilities;

(2) the availability of a crop insurance payment;

(3) failure to follow the requirements contained in the processor contract; or

(4) for some crop provisions, bypassed acreage would not be insured if the following apply (Check the applicable crop provisions to see if either (a) or (b) or both (a) and (b) apply):

(a) The insured and the processor are the same or related persons, or Insured acreage was NOT harvested first, or

(b) Acreage insured under the terms of the applicable crop provisions was bypassed and acreage not insured under the applicable crop provisions was harvested instead.

F Claim Entries When Bypassed Acreage Due to Insured Cause of Loss. The stage column on the claim form will show "UB" for unharvested acreage that is bypassed or not timely harvested by the processor because the insured crop was damaged due to INSURED causes of loss. The potential production per acre shown on the claim form in the column for appraised potential will be **zero ("0")**. Consistent with the claim form, no production from the bypassed acreage will be counted for APH purposes.

G Damaged and Undamaged Acreage in the Same Field. When there is damaged and undamaged insured crop acreage in the same field (and can be identified as such) and the processor chooses to bypass the entire field instead of accepting the harvested production or the processor harvesting the undamaged acreage, the damaged and undamaged acreage will be divided into separate subfields.

(1) An appraisal is not required on the damaged acres, provided the AIP can verify the damage was due to an insurable cause of loss.

(2) The undamaged acreage will be appraised, and the production will be counted as production to count for claim purposes.

H Claim Entries When Bypassed Acreage Due to Uninsured Cause of Loss. The stage column on the claim form will show "PB" for unharvested (bypassed) acreage **when insured cause(s) of loss did not prevent the processor or producer from timely harvesting** (e.g., the processor over-contracted, equipment breakdown, etc.). The potential production per acre (as of the date the crop should have been harvested) shown on the claim form in the column for appraised potential will be the appraised amount and will be counted as production against the guarantee for claim purposes and for APH purposes.

(1) A separate appraisal is required to assess production lost on acreage damaged by uninsured causes of loss (i.e., livestock damage, failure to follow good farming practices, etc.). The appraised per acre production from such acreage will be shown on the claim form in the item for uninsured causes. This appraisal for uninsured causes will not be counted for APH purposes.

(2) Although acreage may have been bypassed and an insured cause of loss did not prevent harvest (e.g., the processor over-contracted, equipment breakdown, etc.), an appraisal which shows production below the unit guarantee due to insurable causes (e.g., drought reduced the potential PRIOR to bypass) may result in an indemnity.

I Production to Count When NO Insured Cause of Loss Prevented Timely Harvest. When an insured cause of loss DID NOT prevent timely harvest of the crop, the production to count for the insured crop acreage that is bypassed or not timely harvested will include:

(1) The appraised production on unharvested acreage;

(2) Any production or value lost due to uninsured cause(s), whether harvested or unharvested acreage; or

*** (3) **For green peas, processing beans, processing pumpkins, processing sweet corn, and processing tomatoes**: The harvested/delivered production from any acreage not timely harvested. The amount of harvested production to count will be determined by dividing the dollar amount paid, payable, or which should have been paid under the terms of the processor contract for the quality and quantity of the insured crop delivered to the processor, by the base contract price per tons (pounds for green peas). If the price paid for the harvested production has been reduced because of quality deficiencies resulting from not timely harvesting (when an insured cause of loss did not prevent timely harvest of the insured crop), an appraisal for uninsured cause will be required. Subtract the amount paid from the amount that would have been paid before the price reduction. Divide this amount by the contract price and enter the result in the column on the claim form for uninsured cause appraisals.

J Processor Payments For "Bypassed Acreage"- Do NOT include such payments in any appraisal OR as production to count.

90 VERIFYING HARVESTED PRODUCTION

A Harvested production will be verified or determined by the following:

(1) Acceptable evidence of third-party sales and/or commercial storage.

(2) Measuring farm-stored harvested production. (Refer to Part 3, Section 6.)

(3) Comparing harvested production to appraisals made from the unharvested areas of the fields left under the terms of the policy when the amount of reported harvested production is questionable.

(4) Comparing reported production to appraisals and production in the area when there is reason to question the reported harvested production.

(5) Weighed and farm-stored records (Refer to PAR. 104). Insured's records of prior year's weighed and stored production CANNOT be used.

(6) If the insured claims all of the unit has been harvested, verify that all fields and areas of the field (orchards or vineyards, if applicable) have been harvested. Also, verify that all of the production that could be harvested has been harvested; i. e., if only the best acreage or best fruit (cherry picked) from the trees or vines has been harvested, the remaining unharvested crop must be considered production to count unless such crop is not considered production to count in accordance with PAR 85 H of this handbook, with procedures in the respective crop loss adjustment handbook, crop provisions or if applicable, SPOIs.

B Caution. DO NOT rely solely on statements or evidence of sales to represent all of the production. Review all production evidence CLOSELY when the policyholder controls the transportation (e.g., trucking or handling company); manufacturing (processing plant); farm scales; or sales (warehouse) of a particular crop. If there is evidence that suggests the insured has misrepresented production, DO NOT (adjuster) sign the claim. Notify the AIP of the situation.

91 VERIFYING SOLD OR COMMERCIALLY STORED PRODUCTION

A Names in which Production Was Sold. Verify with the insured the names(s) in which production has been sold on insured acreage under the contract.

B Harvested Production Records and Receipts

(1) Follow up and verify harvested production records against third-party summary/settlement sheets or storage receipts/summary from but not limited to:

(a) Commercial elevators
(b) Seed companies
(c) Packing Houses
(d) Marketing Cooperatives
(e) Mills
(f) Warehouses
(g) Gins
(h) Processors

(2) Acceptable Third-Party Summary/Settlement Sheets or Storage Sheets:

(a) For all crops, the third-party records must contain at least the following:

1 Name and address of the buyer or the commercial storage facility,

2 Insured's name,

3 Load number or ticket number,

4 Crop,

5 Gross weight (for most crops this includes weight of conveyance delivering the production),

6 Tare weight (conveyance weight, may also include dirt, rocks, etc., and may include for some fresh produce fruit, cull weight of produce),

7 Date weighed, and

(b) Unit and/or field Identification from which the production was harvested that can be correlated to the unit numbers. The insured (or insured's authorized representative) must handwrite this information on the third party record. If only a field identification is shown, the adjuster must be able to verify that the field identification can be correlated with the unit numbers for the crop/county for the current crop year. If the adjuster cannot correlate the field identification to a unit number for the crop/county, the production must be considered commingled and the procedures in PAR. 126 apply.

***

(3) In addition to (2) above, grain-crop-third-party sales or storage records should also contain at least the following:

1 FM (or dockage, if applicable) Percentage (Refer to PAR. 98 for acceptable reduction for FM or dockage.),

2 Moisture Percentage (Refer to PAR. 97 for allowed adjustments for moisture.), and

3 Test Weight.

The records can be accepted if this information is not contained on the records; however, no adjustments can be made for any of these items since the information is unknown. Also, if this information is contained on the records for some loads but not all of the loads, only the loads for which the information is provided and for which adjustments would be allowed can be adjusted.

(4) **Adjustments to the delivered Gross Production (after deduction of tare weight of conveyance).**

(a) Third-party sales and storage records may contain adjustments to the gross production that may or may not be able to be used for loss adjustment purposes. Most crop provisions (quality endorsement, if applicable), require that quality deficiencies (except test weight can be determined by the adjuster) are determined by graders licensed to grade the commodity and that are licensed by the entity specified in the crop provisions. For some types of conditions or damage, policy provisions may require approved labs make the determinations. In these cases, a grade certificate or other acceptable document from the licensed grader/entity (or lab, if applicable) must support these adjustments. Warehouses that have licensed graders in accordance with policy provisions may not have a formal grade certificate. In some cases, some grade deficiencies may be shown on the individual load slips, etc. Refer to PARs. 95 and 96 and applicable crop provisions, endorsements, and crop LASHs for more detailed information.

(b) For some crops and types of damage, adjustments to gross production must be based on the deficiencies determined by the authorized grader PRIOR to the crop being delivered for sale or prior to being placed in commercial storage. These requirements can be found in one or more of the following: crop provisions, Special Provisions, crop LASHs, or these procedures.

C Verification of Third-Party Summary/Settlement Sheets or Summary of Commercial Storage Sheets

Verify load records/weight tickets or storage receipts from the buyer or commercial storage facility against the entries on the summary/settlement sheets of the buyer or Summary of Storage of the commercial-storage facility. Obtain GROSS PRODUCTION for the unit from the summary of storage and/or settlement sheets after verification. Refer to the Forage Loss Adjustment Handbook for specific information regarding requirements for forage production records.

D Claim Entry

Enter the GROSS PRODUCTION (before deductions are made for dockage, moisture, percent of shell or sugar, or quality adjustment) in the appropriate column for gross production on the claim form.

(1) If the gross production of the commodity (before adjustments) on the settlement sheet is in scale weight rather than the unit of measure for the crop (e.g., settlement sheet is in lbs. and unit of measure for the crop is bushels), the adjuster must convert the scale weight to the applicable unit of measure for the crop, as stated in (2) below:

(2) Converting Scale Weight to Applicable Unit of Measure. To convert gross scale weight to units of measure, divide the weight by the standard weight per unit of measure. Refer to Exhibit 21 for standard bushel weights. **Example:** The standard weight for a bushel of wheat is 60 lbs. The settlement sheet shows the gross production of wheat (before adjustments) is 10,256 pounds (10256 lbs. ÷ 60 lbs. = 170.9 bushels). This bushel amount would be entered in the column for gross production on the claim form. Refer to Exhibit 4, Unit of Measure of Production, by Crop for the specific unit of measure for each crop.

E Individual Weight Tickets or Load Slips

(1) DO NOT use individual weight tickets or load slips without supporting documentation of total production such as third-party produced ledger sheet(s) or settlement sheet(s) from the buyer or commercial storage facility to determine harvested production for an individual unit unless the storage facility or buyer will not provide ledger or settlement sheets. When the buyer or storage facilities will not provide ledger or settlement sheets, document the facts in the narrative of the claim or a Special Report.

(2) Loads cannot be split between units because this constitutes commingled production and must be handled as such, unless the insured has verifiable load records as noted in PAR. 105 D and the insured fulfills all requirements in PAR. 105 D. Refer to PAR. 126 for commingled production procedures. This does not apply to crops using containers, bins, boxes, crates, etc., if each container, bin, etc., is labeled for the unit where production was obtained.

F Production Sold Directly To End Users or Other Producers

Production sold directly from the insured to end-users such as feed lots (commercial and individual) or another producer must be verified by additional weight documentation from either the buyer or a disinterested third party, e.g., elevator or commercial scale.

G Verification of Direct Marketed Production

When crop provisions allow the crop to be insured when the crop is grown for direct marketing (or the crop provisions allow coverage by SPOIs or Written Agreement), the crop provisions also require in the “Duties in the Event of Damage or Loss” section for the insured to notify the AIP by at least the number of days specified in the crop provisions (SPOI or Written Agreement, if applicable) before any production from any unit will be harvested and sold by direct marketing. The AIP will conduct a timely pre-harvest appraisal that will be used to determine the insured’s production to count for

production that is sold by direct marketing. These appraisals and any acceptable records provided by the insured will be used to determine the insured's production to count. If the AIP is unable to perform the appraisal due to the insured's failure to provide timely notice, an appraisal of not less than the per-acre guarantee will apply.

Acceptable records of harvested and sold production are as follows:

(1) Acceptable Pick Records

(a) To be acceptable pick records, it cannot be a summary of the pick records, and must:

1 Include the names of the individuals paid by the grower (crew leader or picker).

2 Show the actual running tallies of production harvested by the pickers.

3 Be legible, understandable, and reasonable when explained by the insured.

4 Be accompanied by verifiable receipts such as a photocopy of the canceled check(s) showing the banking institution's stamp of payment. The insured must identify the price paid per volume of picked, converted to the insurable unit of measure (bushels, lugs, or boxes), and weight per bushel, lug, or box.

(b) When verifying the pick records, the complete pick record for the entire crop must be reviewed.

(c) Copies of acceptable pick records with any explanation must be retained in the insured's loss-file folder.

(2) Other Acceptable Records

(a) A daily accounting of sales records showing amount of production and price received in a ledger or log.

(b) Daily cash receipts.

H When some of the production used to fulfill an insured's speculative contract was obtained from another entity

When, due to insured causes, an insured claims he/she did not produce enough production to fulfill a speculative contract and part of the production the insured used to fulfill the contract was obtained from another entity and the production records show it was all marketed in the insured's name, then the following documentation is considered acceptable to separate the insured's production from the production grown by the other entity, **provided the amount of production the insured is claiming he/she produced for the unit is reasonable**[1]:

(1) A copy of a cancelled check or other credible payment receipts if the insured has already paid for the production;

(2) If the other entity did not deliver the production directly to the insured's buyers, a copy of weight ticket(s) (from commercial elevator scales or non-portable farm scales) of the production obtained from the other entity that shows the other entity's name, crop name, weight of the production, and date weighed; and

(3) A statement, signed by the insured and the entity who furnished the other production, which explains the transaction. The statement must include at least the following:

(a) Insured's full name and policy number,

(b) Crop name,

(c) The amount of the production purchased/obtained from other entity,

(d) If this was not a cash sale prior to delivery, what the payment arrangement is; i.e., loan, etc.,

(e) Date the production was purchased/received from the other entity or date other entity delivered the production directly to the insured's buyer,

(f) If the other entity delivered the production directly to the insured's buyer, the load numbers delivered so the amount of production from the other entity can be verified against the insured's settlement sheet,

(g) The other entity's full name, address, and telephone number;

(h) Whether the other entity also had Federal crop insurance and if so, the policy number, unit number, and the name of the AIP servicing the other entity's policy; and

(i) Date the statement was signed.

[1] Reasonable is when the yield loss for this unit is similar to the yield losses for other producers in the area and is consistent with the insured's other unit production for the crop/crop year, unless the inconsistency of production among the insured's units is explainable and verifiable; e.g., hail damaged on one of the insured's units but none of the others. Explainable and verifiable inconsistencies must also be documented in the statement above.

92 VERIFYING FED PRODUCTION

A Include in Production to Count. Fed production must be counted as production when determining total production on a unit.

B Insured's Responsibilities

AIPs are to encourage producers to have any quantity of production intended for feed measured (by the AIP, FSA, or other party acceptable to the AIP) or appraised by the AIP to determine the amount of production/moisture and quality before feeding. Otherwise, the insured is responsible for maintaining a formal written record system (e.g., similar to that shown in FCIC's Guidelines for a Production Record Management System) of fed production and to have those records available at the time the claim is

prepared. If production is not measured or appraised by AIP prior to feeding, follow the procedure in Par. C, D, E, and F below.

C Review Records

Review the fed production records for reasonableness and if written records are questionable, document the reasons and notify your next level of supervision. Also, use the following guidelines when determining reasonableness: If feeding from a previous year's inventory, to which current year's production will be added, the amount of previous year's production must be measured prior to adding current year's production. For acceptable records of fed production, the following is needed:

(1) Amount of grain fed each day,

(2) Bin ID from which the production was taken, if applicable,

(3) Number and kind of livestock,

(4) Estimated average weight of livestock per head and location or pen number,

(5) The unit number from which the fed production was taken, and

(6) Whether fed production was from previous year's production or fed directly from the field or truck.

D Refer to the Forage Loss Adjustment Handbook for specific record requirements for fed and sold forage production.

E Claim Entry

If fed production records are reasonable, enter fed production on the claim form as gross production. (See the crop handbook for entry instructions for harvested production.) Adjustments for moisture, dockage, or quality will be allowed ONLY if acceptable records are available to support the deductions or a sample for grading is available; i.e., settlement sheets from a landlord who has a share in the same crop acreage or adjuster obtained samples from the landlord's stored production can be obtained for grading.

F Documentation

Document the fed production records in the narrative of the claim form or on a Special Report. If a Special Report is used, it must be signed by the adjuster and the insured.

93 VERIFYING AND ACCOUNTING FOR PRODUCTION NOT TO COUNT

There are times when production may not be counted as part of the total production of a unit. In order to enter production not to count on the claim form, ACCURATE RECORDS of such production must have been kept; i.e., it must have been measured or weighed (with available satisfactory scale records), unless load records or combine monitoring records as allowed by PAR. 105 are applicable, before other production is added.

A Examples. Some common examples of production that should not be counted when accurate records of such production are provided.

(1) Previous or prior crop year's production when stored with the current crop year's production,

(2) Harvested production from uninsured acreage whether stored or sold;

(3) Harvested production from acreage damaged solely by uninsured causes (appraisal for solely uninsured causes has been applied to such acreage in the "Uninsured Cause" column of the claim form),

(4) Harvested production from multiple units or contracts when stored within one storage facility, and

(5) Purchased grain is stored with harvested grain.

(6) Harvested production from other entities when stored with the insured's production within one storage facility, and acceptable records (bin markings are not considered acceptable records) are provided that identifies the production not to count for the other entities.

B Verification

Substantiate production not to count from current year's production with farm management records (settlement sheets, sales receipts, load counts, weight slips, feeding records, etc.) to assure that you are COMPLETELY satisfied that such production should be considered production **not** to count. If the production not to count is prior year's production, the only acceptable record is the AIP's or another USDA agency's measurement of the prior year's production just prior to current year's production being added. This measurement must be kept in the insured's loss file. Otherwise, the production must be considered production **to** count. Refer to (2) in subparagraph C below.

C Accounting for Production Not to Count on the Claim Form

(1) There are two ways to account for production not to count on the claim form. Either method outlined below can be used unless your AIP specifies that only one of the particular methods listed below will be used.

(a) For production with storage measurements that are to be recorded in the columns for recording such measurements on the claim form, the depth measurement of the production not to count may be subtracted from the total bin measurement depth. The resulting depth measurement (production to count) will be entered in the appropriate column for depth

measurements as instructed in the crop handbook. Although no specific entry for production not to count is required, document the depth measurement for the production not to count in the narrative of the claim form and explain why it is production not to count. Refer to PAR. 113 E for detailed example; OR

(b) Calculate all production not to count to net production, and enter in the "Production not to Count" column as instructed in the crop handbook.

(2) AIPs CANNOT accept insured's weight records/tickets for current year's production stored in a structure (refer to PAR. 104) with prior year's production to separate the current and prior year's production, and CANNOT authorize insured's to make structure markings to separate production from the current and prior year(s) stored in the same storage structure, as described in PAR. 105, UNLESS the AIP or another USDA agency measures the prior year's production just prior to current year's production being added (a copy of the other USDA agency's measurements must be kept in the loss file).

94 GLEANED ACREAGE

A General Information

Gleaning is the collection of crops from farmers' fields that have already been harvested or fields where it is not economically profitable to harvest. FCIC encourages and promotes gleaning efforts of insureds. AIPs are encouraged to allow gleaning in situations where a crop or portion of a crop may otherwise go unused or be destroyed. Refer to the definition of "Gleaner" In Exhibit 1.

B Gleaning Allowed Only If There Is an Acceptable Charitable Organization

(1) FCIC will allow gleaning only when the crop has been gleaned by a charitable organization listed in the Department of Agriculture Handbook, "*A Citizen's Guide to Food Recovery"* and the insured has not received compensation from the organization (refer to D below). If a particular organization is not listed in the handbook, contact the State coordinator listed in the handbook. The State coordinator will provide updated information on approved organizations added to the list. Include updated information from the State coordinator showing approval of the particular organization as documentation in the insured's loss file.

(2) "*A Citizen's Guide to Food Recovery"* also contains other relevant information on gleaning and food recovery, such as the "Good Samaritan Law" that protects the insured for liability issues. "*The Citizen's Guide to Food Recovery"* can be located on the Internet at www.fns.usda.gov/fns.

(3) Documentation of Charitable Organization

The charitable organization's name and address will be shown on the claim form in the "Narrative" section, or on a Special Report.

C Gleaning will be allowed for all insured crops as follows:

(1) Harvested Acreage

(a) Gleaning will be allowed on crop acreage that has been harvested as long as any remaining crop production on the harvested acreage cannot be harvested using normal and proper harvest methods (e.g., production from lodged corn that can only be hand harvested).

(b) Some crop provisions (e.g., tomatoes, peppers) state that production not meeting the specific requirements of the crop provisions will not be considered production to count; other crop provisions may contain similar provisions. Producers should be encouraged to permit such production to be gleaned.

(c) For harvested production declared zero market value (quality adjusted to zero value or zero production to count) and that is required to be destroyed (e.g., corn with quality adjustment factor of .000); gleaning or food recovery of any salvageable production will be allowed (except as limited by subparagraph D below) and such production will not be considered as production to count.

(2) Unharvested Acreage

(a) If the crop can be harvested, but the insured elects not to harvest, the acreage must be appraised before gleaning is allowed and such appraisal will be used as production to count.

(b) On crop acreage that is routinely mechanically harvested and is damaged by insured causes (e.g., wind, hurricane, etc.) to the extent that it cannot be mechanically harvested with normal harvest equipment, no production is currently counted. However, if the insured elects to hand harvest or use specialized harvesting equipment, the production is counted. If the insured elects to allow gleaning in these situations, production on this acreage will not be considered production to count.

(c) For unharvested production declared zero value (quality adjusted to zero value or zero production to count) and that is required to be destroyed (e.g., unharvested potatoes in excess of 5.1 percent tuber rot that could not be sold); gleaning or food recovery of any salvageable production will be allowed (except as limited by subparagraph D below) and such production will not be considered as production to count.

(3) When gleaning is allowed for acreage qualifying as unharvested acreage, the acreage that is gleaned will not be considered harvested.

D Waiving Requirement to Destroy Zero-Value Production

In cases where FCIC normally requires destruction of harvested or unharvested zero-value production (quality adjusted to zero value or zero production to count), gleaning can be allowed as long as the crop does not contain substances or conditions identified by the Food and Drug Administration or other public health organizations of the United States as injurious to human or animal health.

E No Compensation Can Be Received For the Gleaned Crop

If any compensation is received by the insured for the gleaned crop from any qualified charitable organization, it will not be considered gleaning for crop insurance purposes. Compensation for non-crop items, services, labor, etc., as described in (1) below is not considered compensation for the crop.

(1) Situations not to be considered compensation for the crop:

(a) States tax credits and other state and federal tax advantages for donating gleaned commodities.

(b) Reasonable compensation from a qualified charitable organization to the insured for harvest and/or transportation of the gleaned (donated) crop:

1 the qualified charitable organization indicates in writing the amount of compensation and that the compensation is solely for reimbursement of harvest and/or transportation costs incurred by the insured, and

2 the insured certifies in writing that the compensation is solely for harvest and/or transportation costs.

(2) Situations considered to be compensation for the crop:

(a) When the qualified charitable organization and/or insured have not provided the required information in writing as specified in (1) above, the compensation received will be considered to be for the crop.

(b) When the AIP determines that the compensation for harvest and/or transportation as allowed in (1) above is excessive (i.e., not reflective of the associated costs) and/or that part of the compensation is for the crop, the AIP will consider the compensation received to be compensation for the crop.

(3) Do the following when compensation is considered to be compensation for the crop:

(a) If the claim has already been processed, a corrected claim will be prepared for the types of claims described in the above subparagraphs C (1) (a), C (1) (c), C (2) (b) and C (2) (c). The harvested production will be used as production to count. In cases where production records are not available, the amount received for gleaning will be divided by the elected price election to determine production to count. For dollar amount crops, the dollar amount received will be used to determine the amount of production or value to count.

(b) For the types of claims described in above subparagraphs C (1) (b) and C (2) (a); the claim will not be corrected.

F Gleaning Codes For the Claim Form

In the "Intended Use" column on the claim form (Production Worksheet for most crops), code acreage that is released to be gleaned as shown in the table below:

GLEANING CODE	USE WHEN. . .
"HG"	it is the type of claims described in subparagraph C (1) above.
"UG"	it is the type of claims described in subparagraph C (2) above.

G Signed Certification of Gleaning

A Certification Form will be prepared, as follows:

(1) For the type of claim described in above subparagraph C (2) (b), the certification on the Certification Form as required in PAR. 85 H (2) (e) is still required except the statement must be modified as follows:

"As indicated by the insured's signature below, the insured certifies that the damaged acreage that cannot be mechanically harvested with normal harvest equipment will not be harvested and if the acreage is gleaned it will be gleaned by the organization shown in the narrative of the claim form (or other USDA approved charitable organizations) and the insured will not receive any compensation from the organization. If the insured harvests the crop after this certification or receives compensation from the charitable organization, the insured understands he/she may be subject to the misrepresentation provisions in the crop insurance policy."

(2) For the type of claim described in above subparagraph C (1) (c) and C (2) (c):

Before a claim can be finalized, the AIP must receive a completed Certification Form from the insured showing the insured's certification of the name and address of the approved charitable organization that gleaned the acreage and/or production released for gleaning, that all such acreage and production was gleaned, and that the insured received no compensation from the charitable organization. Refer to the PAR. 66 for procedures regarding the Certification Form.

When the entire production is not gleaned on any acreage as indicated by the insured on the Certification Form, then the adjuster must make a farm visit to verify that the balance of the production has been destroyed or a completed Certification Form will need to be signed for destruction of the balance of the production.

SECTION 5 ADJUSTMENTS TO PRODUCTION

95 GENERAL INFORMATION

A Reasons Why Production May Be Adjusted

Adjustments are allowed for the following:

(1) Moisture when the moisture percentage meets the requirements stated in the crop provisions or endorsement (unless specified otherwise in the SPOIs). Refer to PAR. 97 for more information.

(2) Foreign-material (FM) or Conspicuous Admixture or Admixture, as defined by FGIS, (adjustment for dockage (as defined by FGIS) ONLY if allowed for the crop, as specified in PAR. 98). Adjustments for any of these items can only be made if they meet all of the criteria specified in PAR. 98.

If there is a conflict about FM instructions between the LAM and the individual crop handbook, the LAM will prevail. Refer to PAR. 3 D.

(3) Low quality caused by an insurable cause of damage. Adjustment for quality is made only when deficiencies and conditions of the crop meet the requirements stated in the crop provisions or endorsement to the crop (unless specified otherwise in the SPOIs). Refer to PAR. 96 for more information.

B Who Makes Adjustment Determinations

(1) Moisture and FM (dockage if allowed in PAR. 98) determinations may be made by:

(a) Grain handlers at commercial facilities that buy or store grain,

(b) FGIS Field Offices or FGIS-designated or delegated entities; or.

(c) The adjuster. (Refer to PAR. 97 and 98 for more information.)

(2) All deficiencies and conditions of the crop for which quality adjustment applies MUST have been graded or determined by the entity specified in the crop provisions (SPOIs or endorsement, if applicable), except test weights of farm-stored production may be determined by the adjuster as specified in PAR. 101. **Samples to make determinations CANNOT be obtained by the insured or insured's representative**. **Samples must be obtained by an adjuster or AIP-approved disinterested third party who is trained to take samples, unless excepted for moisture, as stated in PARs 104 and 105.**

C Production Disposed of Before Determinations Are Made

(1) When the insured's interest is 100 percent in the crop:

Adjustments in production for moisture, FM (dockage ONLY if allowed for the crop, as specified in PAR. 98), or quality (quality adjustment) cannot be allowed for production disposed of before necessary determinations are made, unless sales or weight tickets show gross weight, moisture content, FM and/or dockage,

and any other applicable deficiency (deficiency for which quality adjustment applies, must be graded by the entity specified in the crop provisions before deductions for deficiencies or conditions can be made; refer to PAR. 96.)

(2) When the insured's interest is LESS than 100 percent in the crop (**applicable ONLY when the other production is representative of the insured's share):**

(a) Moisture or FM (dockage ONLY if allowed for the crop, as specified in PAR. 98) can be allowed IF:

1 The production belonging to the other person sharing in the crop is available to make determinations, or

2 Weight tickets are available which show gross weight, FM, and moisture content.

(b) Quality adjustment can be allowed ONLY if:

1 The production belonging to the other person is available for the adjuster to pull samples to be sent to an entity allowed in the applicable crop provisions, SPOIs, or endorsement to make determinations of deficiencies and/or substances or conditions injurious to human or animal health. Refer to PAR. 96 for more information concerning quality adjustment; or

2 A copy of records (tickets, slips, receipts or other records) from the other person's share of the crop is furnished and the records specify the deficiencies (and deficiency amounts) for which quality is allowed under the insurance contract. These records are only acceptable if the crop was delivered to a buying point where samples were pulled by a disinterested third party and were graded by an entity specified in the applicable crop provisions, SPOIs, or quality endorsement or option to the crop.

96 QUALITY ADJUSTMENT (QA)

A Policy/Endorsement Provisions

Some policies/endorsements provide for a reduction in the mature production to count when the quality of the appraised and/or harvested mature production is reduced due to insurable causes. The quantity of mature production to count is reduced when it meets the requirements stated in the crop policy/endorsement (SPOIs, if applicable). This adjusted production is used for the indemnity and the APH Report for the same crop year, unless specified otherwise for the crop in the CIH procedures; e.g., an exception to this is potatoes.

B Who Can Obtain and Submit Samples for Grading/Analyzing

Samples can be obtained and submitted for grading/analyzing ONLY by the adjuster or a person who is:

(1) A disinterested third party (The insured or insured's authorized representative are not considered disinterested third parties. Elevator or processor personnel at the

buying point that are trained to pull samples are considered disinterested third parties.);

(2) Trained to the AIPs satisfaction in how to extract representative samples (AIPs may assume that the person pulling samples at an elevator, processor, etc., is trained); and

(3) Approved by the AIP to obtain and submit the samples for grading.

For claims involving mycotoxins or other conditions or substances injurious to animal or human health, refer to PAR. 102.

C Sample Requirements for Adjuster-Obtained Samples

The following applies, unless samples involve production containing mycotoxins or other conditions or substances injurious to animal or human health. Refer to PAR. 102 for sample requirements for mycotoxin-infected production.

(1) Adjuster-Obtained Samples from Unharvested Production

(a) The minimum number of representative samples and size of the representative areas to be harvested must be at least the required number and size stated for appraisals in the applicable crop handbook.

(b) Encourage insureds to harvest the representative areas in your presence. However, if an insured is unwilling or unable to harvest the selected representative areas in your presence, you must hand harvest the representative areas of the production to obtain the samples.

(c) Identify the sample from each RSA, by unit number and field I.D. or subfield I.D., if applicable. Refer to (3) below for information about sample size and transportation of samples.

(d) Similar or Dissimilar Quality

1 Similar Quality

a If the quality of the production in the field or subfield of a unit appears similar, for the following crops **only,** the AIP may use a blended sample of all samples collected; however, the AIP may not have less than one graded blended sample per unit. This will apply to the following crops:

barley, buckwheat canola, corn, dry beans, dry peas, flax, grain sorghum, malting barley, millet, mustard, oats, peanuts, popcorn, rice, rye, safflowers, soybeans, sunflowers, wheat, and wild rice.

b For all other crops, the AIP must have each sample graded (i.e., the use of blended samples is not an option), unless specified otherwise in the applicable crop LASH.

2 Dissimilar Quality

If the quality in the field or subfield is not similar, then blended samples are not allowed. A grade is needed for each sample.

(2) Adjuster-Obtained Samples From Undelivered, Harvested Production

(a) Adjuster-Obtained Samples from Conveyances

If the insured has harvested the production and samples are taken from trucks, wagons, etc., prior to delivery, the adjuster should probe in different areas of the trucks, wagons, etc., to obtain a sample from each load. Each sample must be submitted for grading. However, when it is known or suspected that the production contains mycotoxins or other substances or conditions injurious to human or animal health, refer to PAR. 102 F (2) (d) for instructions specific to obtaining a representative sample from a conveyance for the purpose of submitting for testing for mycotoxins or other substances or conditions.

(b) Adjuster-Obtained Samples from Stored Production

If the production is stored, obtain the sample from the storage structure for all QA factors other than mycotoxins (refer to Vomitoxin exception in following sentence) or other substances or conditions injurious to human or animal health, or any other type of damage specified in the individual Crop
*** LASHs**. (Vomitoxin Exception: The AIP may obtain samples from the storage structure to determine Vomitoxin levels – refer to PAR. 102 for additional information.)** Identify samples by bin ID and unit number. If the production has been commingled between units, refer to PAR. 126. Use a probe (may need an extension) or other means to extract samples from various depths and areas of the storage structure and combine into one sample. Extract enough samples to ensure the combined sample will be representative of all production in the storage structure. A sample from each storage structure must be submitted for grading.

(3) Sample size and transportation

Follow the instructions provided by the entity specified in the crop provisions to grade samples in regards to sample size, container, and transportation to ensure the integrity of the sample(s).

(4) For crops administered under the United States Grain Standards Act (USGSA) or the Agricultural Marketing Act, adjuster-obtained samples can ONLY be submitted to FGIS, AMS, or their designee, as applicable for the crop, OR a grain grader as noted in PAR. 96 E who can grade submitted samples. For state licensed graders, this can vary from state to state. Inquire at the individual warehouse or at the appropriate State office for this information.

(a) **USGSA.** Crops administered under USGSA are, as follows: barley, canola, corn, flaxseed, oats, rye, grain sorghum, soybeans, sunflower seed, and wheat.

(b) **Agricultural Marketing Act.** Insurable crops administered under the Agricultural Marketing Act include but not limited to the following: dry beans, lentils, dry peas, rice, safflowers; (check individual crop provisions).

(c) **Locations of Facilities.** Contact the nearest FGIS field office for the location of the nearest facility that can give a grade for submitted samples for the applicable crop. A list of FGIS Field Offices (listing the locations of the official service providers/official inspection sites) can be found at the GIPSA Internet site or a link can be found on the RMA website, located where the loss adjustment standards handbooks are located. Not all listed facilities are licensed to grade all commodities. If you are unsure of whether the facility is licensed to grade the crop, check with the facility before submitting the sample.

D Samples from Harvested and Delivered Production

(1) Unblended Samples: If samples are pulled from each conveyance and each sample from each conveyance is graded, these are unblended samples. For unblended samples, determine quality adjustment factors from the grades of each conveyance. Refer to Exhibit 1 for the definition of conveyance.

(2) **Blended Samples**:

(a) For only the following crops, unless specified otherwise in the individual crop handbooks: barley, canola, corn, dry beans, dry peas, flax, grain sorghum, malting barley, millet, mustard, oats, peanuts, popcorn, rice, rye, safflowers, soybeans, sunflowers, wheat, and wild rice grades from blended samples, by unit, for non-mycotoxin quality adjustment, from both USWA licensed warehouses and warehouses holding a storage agreement with CCC may be accepted ONLY if all of the following apply:

1 The commodity is sold on the same basis as the blended samples used to determine the grading factors for quality adjustment.

2 Proof of the sale, sale amount and grades, or signed written certification of pending sale from the buyer including the quantity and quality is provided and is acceptable to the AIP.

3 The blended sample is representative of all the loads for which it applies, and it is determined acceptable by the AIP.

(b) In no circumstances will grades from improper blending methods such as the following be accepted:

1 A sample from each conveyance, regardless of producer, is put into one container and then a sample is taken from the container at the end of the day or the week. The grade from that sample is applied to each producer's production who delivered grain during that time.

2 On a basis greater than the unit structure on which the insurance is based (optional, basic, enterprise, or whole farm, as applicable), all samples from a single producer are put into a container and then a single sample is taken from this producer's container when harvest for

the crop is completed or when otherwise directed by the producer. The grade from that sample is applied to all of that producer's production.

3 A single sample is taken from one conveyance for the producer. The grade from that sample is applied to all of that producer's production.

E Who Can Determine the Quality of Most Crops for Quality Adjustment Purposes

If the crop qualifies for quality adjustment based solely on a test weight determination made by the adjuster, AIPs are highly encouraged to obtain additional quality determinations from the entity specified in E (1) or (2) for the respective crop.

(1) For canola, coarse grains (corn, grain sorghum, and soybeans), small grains crops (barley, flax, oats, rye, and wheat), and sunflowers, deficiencies in quality (except test weight, which also may be determined by the adjuster, including the use of the test weight to determine the grade, if applicable), must be analyzed by a:

(a) Grain grader licensed under the USGSA or the USWA;

(b) Grain grader licensed under State law and employed by a warehouse operator who has a storage agreement with the CCC; or

(c) Grain grader not licensed under State law, but who is employed by a warehouse operator who has a commodity storage agreement with the CCC and is in compliance with State law regarding warehouses.

(2) For dry beans, dry peas, rice, and safflowers, deficiencies in quality (except test weight, which may be determined by the adjuster, including the use of the test weight to determine the grade, if applicable), must be made by a **grader**:

(a) Licensed under the United States Agricultural Marketing Act or the USWA,

(b) Licensed under State law and employed by a warehouse operator who has a storage agreement with the CCC; or

(c) Not licensed under State law, but who is employed by a warehouse operator who has a commodity storage agreement with the CCC and is in compliance with State law regarding warehouses.

(3) In regards to substances or conditions injurious to human or animal health, production samples of the crop must be analyzed by a laboratory that meets the required criteria for an AIP-approved testing facility (laboratory) as outlined in PAR. 102 H.

(4) **Information About USWA and Location of USWA Licensed Warehouses**

(a) A facility licensed under the USWA must have individuals on site who are licensed to weigh, inspect, or grade specific commodities, and may only give a grade for production that is delivered to that warehouse for storage or handling. Warehouse employees licensed to grade specific commodities under the auspices of the USWA cannot provide grades for samples submitted for grading purposes only. A link to a listing of licensed

warehouses, the city and the applicable crops (e.g., CTN is cotton, GRN is grain, DEB is dry edible beans) can be found on the FSA website or on the RMA website, located where the loss adjustment standards handbooks are located.

(b) Each warehouse is only licensed for certain types of commodities. For example, a warehouse licensed for grain cannot inspect, weigh, or grade dry beans unless it is also licensed to handle dry beans.

Refer to the applicable individual crop handbook, crop provisions, endorsement or option (if applicable), or SPOIs for specific quality adjustment qualifications and provisions.

(5) A link to the locations of warehouses with a CCC, Uniform Grain and Rice Storage Agreement (UGRSA) can be found on the RMA website where the loss adjustment standards handbooks are located.

F Who Can Determine the Quality of Other Crops

(1) For crops other than those specified in subparagraph E above that have quality adjustment provisions, the policy provisions may allow various factors of quality to be determined by the processor, State grader, or USDA grader, or may not specify who grades the crop but only requires that the crop be graded in accordance with specified U.S. standards for fresh fruit, dried fruit, standards set forth in Marketing Orders, or standards set up by other industry standards, etc. For example: Samples of mustard must be analyzed in accordance with the mustard standards of the state specified in the SPOIs, or by a laboratory approved by the AIP.)

(2) When policy provisions do not specify a specific entity to grade the crop but only specifies that the crop meet or not meet certain standards in order to qualify for quality adjustment, the AIP must assure that the entity grading the crop is qualified to do so; i.e., if an adjuster is grading the crop, the adjuster must have received adequate training to make the grade determinations (this may be on the job training from another adjuster proficient in grading the crop or through the agency or association that sets the standards for the crop. A state grader or Federal grader will be assumed to be qualified. If the crop provisions specify the deficiencies identified by the processor are acceptable, the entity that grades for the processor will be assumed to be adequately trained. Refer to the applicable crop handbook and/or crop policy/endorsement for specific quality adjustment qualifications and provisions.

(3) When there is farm-stored production or unharvested mature production, only adjusters can obtain samples for quality determination purposes, unless specified otherwise in the crop provisions or SPOIs.

G Actual Test Weights to Tenths of Pound

In most cases, grain handlers determine test weight to tenths of a pound. Unless specified otherwise in a crop handbook, test weights are recorded to tenths on the claim form. If the grain handler does not determine the test weight to tenths of a pound, the test weight is still entered to tenths on the claim form (e.g., if the weight is shown as 42 pounds, enter the test weight as “42.0”). Pounds rounded to whole pounds can cause

grain to appear to be ineligible for quality adjustment; e.g., oats having an actual test weight of 26.5 would be eligible for quality adjustment, but when the weight is entered on the claim form as a rounded weight (27 pounds), it does not appear to qualify. Therefore, if quality is an issue and the grain buyer has shown test weight in whole pounds, determine if the buyer has the weight in tenths of a pound.

H Crops having Quality Adjustment Charts in the SPOIs

Crops with quality adjustment charts in the SPOIs will be designated as **"Group 1"** or **"Group 2"** according to the following:

Group 1 QA Statements - Crops with a CCD before 11/30/09 and includes barley, canola, oats, rye, safflower and wheat.

Group 2 QA Statements – Crops with a CCD 11/30/09 and later and includes corn, flax, grain sorghum, soybeans and sunflowers.

(1) On the date of final inspection for the unit, if unsold[1/] production qualifies for quality adjustment under sections B or C of the SPOIs, claims will be settled using the applicable Discount Factors (DFs) for unsold production unless the insured has elected in writing to delay settlement of the claim for up to 60 days after the calendar date for the EOIP. If the grain is sold[2/] during this delay, the claim will be settled using the Reduction In Value (RIV). The insured may request at any time during this delay in settlement, to settle the claim using the applicable DFs for any unsold production. For any production sold to other than a disinterested third party[3/], or that is not sold 60 days after the calendar date for the EOIP, the claim will be settled using the applicable DFs. If the insured does not elect to delay settlement of the claim for unsold production, the AIP may settle the claim for any sold and/or unsold production on the date of final inspection for the unit using the applicable DFs.

(2) **For barley[4/], canola, corn, flax, grain sorghum, oats, rye, safflowers, soybeans, sunflowers, and wheat** production that is eligible for quality adjustment, the quality adjustment factor (QAF) is determined by subtracting from 1.000, the sum of all applicable DFs expressed as three-place decimals. DFs are either: (1) pre-established DFs shown in the SPOIs, or (2) when there are no pre-established DFs for the types/levels of damage on a chart in the SPOIs, the

---

[1/] ***Unsold*** – Grain that does not meet the definition of "sold."

[2/] ***Sold*** – **For Group 1 QA Statements** – Grain is considered sold on the date ownership or title of the grain has passed from the seller to the buyer. **For Group 2 QA Statements** - Grain is considered sold on the date that final settlement between the buyer and seller has occurred and title of the grain has passed from the seller to the buyer.

[3/] ***Disinterested third party*** – as defined in the applicable Basic, Crop, or SPOIs. In addition to the definition of "Disinterested third party", a person or business who does not routinely purchase production for resale or for feed will not be considered a disinterested third party if the RIVs applied by the buyer are not reflective of the RIVs in the local market.

[4/]**Not applicable to Malting Barley. For quality adjustment provisions, refer to the applicable Malting Barley Price and Quality Endorsement.**

DFs are derived from reasonable Reduction in Values (RIVs) applied by the buyers of the sold production, except production with the type/level of damage shown in the SPOIs (**for Group 1 QA Statements** - Section C4 of the SPOIs, or **for Group 2 QA Statements** – Section C3 of the SPOIs), and as stated in PAR. 102 O (4) (b) herein, except for production in **Group 1 QA Statements** - Section C4 of the SPOIs. **For Group 2 QA Statements** – Section C3 of the SPOIs), RIVs are applied only if the production is sold prior to 60 days after the calendar date for the EOIP. The QAF (not less than 0.000) is multiplied by the number of applicable bushels or pounds remaining AFTER any reduction due to excessive moisture (in accordance with the crop provisions).

(3) RIVs

(a) If the reasonable RIV applied by the buyer can be decreased by conditioning the production, the RIV after conditioning may be increased by the cost of such conditioning provided the resulting RIV does not exceed the RIV before conditioning.

(b) The RIV and local market price are determined on the date such quality adjusted production is sold to a disinterested third party.

(4) Zero Market Value[1/] **(**ZMV.)

[1/] ***Zero market value*** - occurs when no buyers in the local area are willing to purchase the production and fair consideration to deliver production to a market outside the local marketing area (distant market) is equal to or greater than the production's value at the distant market.

(a) If on the date of final inspection for the unit, any production, which due to insurable causes, has ZMV will not be considered production to count if the production is destroyed in a manner acceptable to the AIP. **Refer to subparagraph J regarding steps for making final inspection determinations of ZMV.**

(b) In lieu of destruction of ZMV production, the ZMV production may be gleaned provided the criteria stated in PAR. 94 are met. The method of destruction must result in the production having no possibility of being marketed or possibility of salvage use that could result in any type of compensation to the insured. Refer to subparagraph J for exceptions to the requirement to destroy the ZMV crop.

(5) Fair consideration [1/] to deliver sold production to a distant market is allowed only for the types and levels of damaged production included in the SPOIs (**for Group 1 QA Statements** - Sections B1, C1a, C2a, C4a and C4b of the SPOIs and **for Group 2 QA Statements** – Section B1, C1a, C2a, C3a, C3b of the SPOIs) and is not allowed for production fed or used in a manner other than feed. Applicable fair consideration[1/] is added to the RIV.

[1/] ***Fair Consideration*** – is the additional transportation costs to deliver the grain to a market outside the insured's local marketing area (distant market). Additional transportation costs means: Cost in excess of costs to transport to the local marketing area. Transportation costs to be used in this determination must be usual, reasonable, and customary.

(6) Section A of the SPOIs and other applicable SPOI Sections

Section A contains pre-established DFs. Additional DFs due to substances or conditions identified as injurious to human or animal health as stated in Section C of the SPOIs may apply if applicable. Refer to PAR. 102 for procedures pertaining to Section C of the SPOIs.

(a) Other than to consider whether the damaged production is ZMV, as described in (4) above, fair consideration to deliver the production to a market outside the insured's local marketing area (distant market) is not considered, regardless of the market value of the grain; (i.e., the pre-established DF cannot be adjusted for the amount of fair consideration[2] to deliver the production to a distant market). Additionally, conditioning costs are not allowed when the only types and/or levels of damage or grade are ones for which there are pre-established DFs on Section A charts.

(b) ZMV and Fair Consideration. When due to insured deficiencies, there are no buyers in the insured's local market area but there are buyers in distant markets and after fair consideration, the AIP determines by using the steps in subparagraph H that the production is:

1 ZMV (Section D of SPOI) and the insured:

a Destroys the production in a manner acceptable to the AIP, the DF will be 1.000, resulting in zero production to count.

b Destroys the production in a manner NOT acceptable to the AIP or makes no attempt (or refuses) to destroy the production, then such production is no longer considered ZMV and the applicable pre-established DFs on the charts in Section A for the level or type of damage (without adjustments for fair consideration) will be used to determine the QAF to adjust the production to count.

2 Greater than ZMV, the applicable pre-established DFs for the level or type of damage in Section A of the SPOI (without adjustments for fair consideration) will be used to determine the QAF to adjust the production to count.

(7) Pre-established DFs from the Chart in Section A of the SPOI

(a) When there is a pre-established DF for the individual type/level of damage (such as, test weight, kernel damage, etc., or grade (refer to (b) below)) shown on the chart in Section A of the SPOIs, the pre-established DF must be used to establish the QAF, unless ZMV applies.

(b) Pre-established DFs for Grade in Section A of the SPOI

1 General Information

a Besides DFs for the individual type/level of damage (e.g., test weight, kernel damage, etc) there may also be a DF for grade. The individual type/level of DFs should be added to the DF for

grade (if the grain qualifies for the grade DF). The grade DF factor is NOT used in combination with RIVs.

b **Types of Grade DFs**

(i) **DFs for U.S. NO. 5**

The U.S. NO. 5 grade DF is applicable to only Wheat and Barley. Use this DF plus any applicable pre-established DFs, except for wheat and barley, the DFs for US No. 5 and U.S. Sample grade cannot be used together.

(ii) **DFs for U.S. Sample Grade**

The Sample Grade DF is applicable to barley, canola, corn, flax, grain sorghum, oats, rye, soybeans, sunflowers (oil-type only), and wheat. Safflowers do not have a DF for Sample Grade. Use the U.S. No. 5 and Sample Grade DFs only once plus any applicable pre-established DFs for other quality deficiencies. Except for wheat and barley, the
*** DFs for U.S. No 5 will not be used with other pre-established DFs.

(iii) **DFs for Allowable Special Grades or Specific Allowable Sample Grade Defects**

i Special grade (as shown on the grade certificate) of light smutty (wheat), smutty (wheat, oats) or garlicky (barley, oats, wheat) DFs may be used separately or in addition to U.S. NO. 5 or Sample Grade DF.

ii DFs for specific allowable Sample Grade defects such as musty, sour, or commercially objectionable foreign odors (barley, canola, corn, flax, grain sorghum, oats, rye, soybean, sunflower, safflower, and wheat) will be used in addition to the Sample Grade DF.

2 DFs for grade can be used in combination with DFs for mycotoxins or other substances or conditions that are injurious to animal or human health (Section C of the SPOIs) – refer to PAR. 102.

Refer to subparagraph H (13) below for various examples; e.g., when there are types/levels of damage or grade for which there are pre-established DFs, a type/level of damage for which there is NO pre-established DFs, and a combination of a pre-established DFs from Section A and a DF from Section C of the SPOIs.

(c) If there is a type/level of damage or grade for which there are pre-established DFs shown in Section A of the SPOI AND at least one type/level of damage for which Section B of the SPOI would be applicable, the pre-established DF(s) on the chart in Section A of the SPOI are NOT used. In this case, the QA factor is established as stated in Section B.

(8) Section B of the SPOIs and other applicable SPOI Sections **(For Group 1 QA Statements):**

For a type or level of deficiency not shown in Section A, DFs will be determined from Section B (except if the production contains mycotoxins or other substances or conditions injurious to human or animal health) as follows:

(a) For production that is sold (**bids cannot be used)** to a disinterested third party prior to 60 days after the calendar date for the EOIP (as verified by the AIP), the DF will be the sum of all the reasonable RIVs applied by the buyer (a disinterested third party) due to all insurable quality deficiencies and that value divided by the local market price. If the RIV is determined to not be reasonable, the AIP must determine a reasonable RIV based on discounts applied by other buyers in the area (or if necessary, a distant market) for similar types and levels of damage.

(b) At the time of loss adjustment, the AIP has the choice to settle at .500 (plus applicable DFs from Section C of SPOIs) or delay settlement up to 60 days after the calendar date for the EOIP to allow the insured additional time to sell the production.

(c) Production remaining unsold 60 days or more after the calendar date for the EOIP

1 A DF of .500 (plus applicable DFs from Section C of SPOIs) will be used to settle the claim for indemnity.

2 An automatic extension of time will be allowed for the insured to submit the claim for indemnity, not to exceed 90 days after the calendar date for the EOIP. (This does not limit the insured's ability to request an additional extension of time to submit a claim for indemnity in accordance with section 14 of the Basic Provisions.)

(d) ZMV Production (Section D of SPOIs)

1 A DF of 1.000 for production determined by the AIP to have a ZMV, and the production is destroyed in a manner acceptable to the AIP.

2 A DF of .500 if the AIP determines the production has ZMV value but the production is NOT destroyed in a manner acceptable to the AIP or the insured makes no attempt (or refuses) to destroy the production.

CONTINUED ON THE NEXT PAGE

(9) Section B of the SPOIs and other applicable SPOI Sections **(For Group 2 QA Statements**)

For a type or level of deficiency not shown in section A, DFs will be determined from Section B (except if the production contains mycotoxins or other substances or conditions injurious to human or animal health) as follows:

(a) For production that is sold (**bids cannot be used)** to a disinterested third party (as verified by the AIP), the DF will be the reasonable RIV applied by the buyer (disinterested third party) due to all insurable quality deficiencies and that value divided by the local market price. If the RIV is determined to not be reasonable, the AIP must determine a reasonable RIV based on discounts applied by other buyers in the area (or a distant market if necessary) for similar types and levels of damage.

(b) The DF will be .500 (plus applicable DFs from Section C of SPOIs) for all production not sold prior to 60 days after the calendar date for the EOIP (or sold to other than a disinterested third party), **unless the insured elects to delay settlement of the claim.** If the insured sells the production during this delay, the claim will be settled based on the RIV. During the delay, the insured may elect to settle the claim based on the RIV for sold production and the applicable DF for unsold production.

(c) Production remaining unsold 60 days after the calendar date for the EOIP

1 A DF of .500 (plus applicable DFs from Section C of SPOIs) will be used to settle the claim for indemnity.

2 An automatic extension of time will be allowed for the insured to submit the claim for indemnity, not to exceed 90 days after the calendar date for the EOIP. (This does not limit the insured's ability to request an additional extension of time to submit a claim for indemnity in accordance with section 14 of the Basic Provisions.)

(d) ZMV Production (Section D of SPOIs)

1 A DF of 1.000 for production determined by the AIP to have a ZMV, and the production is destroyed in a manner acceptable to the AIP.

2 A DF of .500 if the AIP determines the production has ZMV value but the production is NOT destroyed in a manner acceptable to the AIP or the insured makes no attempt (or refuses) to destroy the production.

(10) DFs Derived From RIVs (**For Group 1 QA Statements** - Section B1, C1a, C2a. C4a. and C4b of the SPOIs. **For Group 2 QA Statements** – Section B1, C1a, C2a, C3a, and C3b of the SPOIs)

(a) DFs are derived from RIVs by dividing the total RIVs (dollars and cents) by the Local Market Price (LMP) and the result to three decimal places.

(b) The LMP is defined in the applicable crop provisions.

(c) If the RIV for **each** qualifying damage cannot be established from the buyer, the RIV will be the difference in the price the insured has received and (excluding any RIV as stated in (11) (g) below) the LMP.

(11) Establishing RIVs RIVs (**For Group 1 QA Statements** - Section B1, C1a, C2a. C4a. and C4b of the SPOIs. **For Group 2 QA Statements** – Section B1, C1a, C2a, C3a, and C3b of the SPOIs)

Use all of the following when establishing RIVs:

(a) When determining RIVs, it is not necessary to determine the actual **value** of the production if the buyer is able to specifically provide, to the adjuster's satisfaction, the reduction in value (RIV) requested.

(b) RIVs and LMPs will be those in effect on the date the production was sold to a disinterested third party verified by the AIP **(bids cannot be used).** Production must have been sold[1] prior to 60 days after the calendar date for the EOIP for the crop, except for production as stated in PAR. 102 O (4) (b) 2). **Refer to PAR. 102, for QA procedures when grain contains mycotoxins or other substances or conditions injurious to animal or human health.**

(c) The RIV is based on the same kind and class of crop that is insured.

(d) **RIV's DO NOT APPLY TO:**

1 Production remaining unsold 60 days after the calendar date for the EOIP (Commercially Stored, Farm Stored, or Appraised Mature Production) except for production as stated in PAR. 102 O (4) (b).

2 Production fed or used in a manner other than feed.

3 Production having ZMV.

(e) Conditioning Costs (subparagraph b in the General Statements of the Quality Statements in the SPOIs): If an RIV can be decreased by conditioning the production, the RIV after conditioning may be increased by the cost of conditioning, provided the resulting RIV does not exceed the RIV before conditioning.

(f) Fair Consideration to deliver sold production qualifying under the Quality Statements of the SPOIs (**For Group 1 QA Statements** - Section B1, C1a, C2a, C4a, and C4b of the SPOIs. **For Group 2 QA Statements** – Section B1, C1a, C2a, C3a, C3b of the SPOIs), and if a lower RIV is available at a market outside the insured's local marketing area (distant market), the RIV may be increased by the additional costs to deliver the production to a distant market; provided the resulting RIV does not exceed the RIV in the insured's local marketing area and the additional costs are usual, reasonable, and customary. In accordance with the General Statements of the Quality Provisions in the SPOIs, fair consideration is not allowed for production fed or used in a manner other than feed or when a pre-established DF is applicable.

(g) No RIV is allowed if it is due to:

1 moisture content,

2 damage due to uninsured causes, or

3 drying,

4 handling,

5 processing, or

6 any other costs associated with normal harvesting, handling, and marketing of the production.

(h) Contracted Production

Contracted production as used in the context of this procedure refers to speculative-type contracts not processor contracts, except for specialty use barley and soybean types. These procedures relating to specialty use barley or soybean types apply to either speculative or a processor contracts (A processor contract for specialty use barley and soybean types must be in place in order to insured production as a specialty types). For specialty use barley or soybean types, quality adjustment will be provided as specified in the crop provisions and SPOI. No additional quality adjustment will be made for any specialty type.

1 If the contracted production has been sold (contract fulfilled) prior to 60 days after the calendar date for the EOIP and the buyer was a disinterested third party:

a The RIV will be the RIV applied by the buyer (who had the contract with the insured) unless the RIV is not usual, customary, and reasonable. If the RIV is not usual, customary, and reasonable, the RIV will be determined from the LMP [1]/ as shown below.

[1]/The policy defines local market price as the cash grain price offered by buyers in the area in which the insured normally markets the insured crops.

Example: Assume the base price for the contracted wheat is $4.50, and the LMP in the local market area is $3.00. The $3.00 will be used to determine the QAF.

Contracted wheat - RIV: Production delivered October 1, and the buyer applied a RIV of $2.00 to the contracted wheat due to the 43 pound (low) test weight. There were no other RIVs applied by the buyer.

Non-contracted wheat RIV - Production delivered October 1 and the same buyer applied a RIV of $1.00 to non-contracted wheat due to the 43 pound (low) test weight. There were no other RIVs applied by the buyer.

In this case, the $2.00 RIV for the low test weight wheat was applied by the buyer for the contracted and delivered grain. The $2.00 RIV for contracted grain was not comparable to the $1.00 RIV in the local market area for non-contracted wheat with the same test weight. The policy defines local market price as the cash grain price offered by buyers in the area in which the insured normally markets the insured crops. The $1.00 RIV will be used to compute the QA factor since it is usual, customary, and reasonable. $1.00 (RIV) ÷ $3.00 (LMP) = .334 (DF). 1.000 - .334 = .666 QAF.

b **For contracted crops with production that has been sold prior to 60 days after the calendar date for the EOIP:**

(i) In accordance with the definition of Sold in the SPOIs for crops **(Group 1 QA Statements)**, production is considered sold when ownership or title of the production has passed from the seller to the buyer. Therefore, when contracted production has been delivered, ownership or title is considered to have passed and the production is considered to be sold even though final compensation has not been made at this time. The claim must be held open until the final compensation of sold production is known in order to obtain the RIV applied by the buyer.

(ii) In accordance with the definition of Sold in the SPOIs for crops **(Group 2 QA Statements)**, production is considered sold on the date that final settlement between the buyer and seller has occurred and title of the grain has passed from the seller to the buyer. The RIV applied by the buyer at final compensation is the RIV that is used.

2 For any portion of the contracted production that was sold 60 days after the EOIP or remains unsold, no RIV can be used. The pre-established DF of .500 must be used, as stated in section B (Refer to PAR. 102 for production covered under Section C of the SPOIs.)

(12) **For claims involving mycotoxin infected production or production containing other substances or conditions injurious to animal or human health** that exceed the maximum amounts allowed by the FDA or other public health organization of the United States or agency of the applicable State (Section C of the SPOI), **refer to PAR. 102.**

SEE EXAMPLES ON THE NEXT PAGE

(13) Examples of determining QAFs with Pre-established DFs for types/levels of damage on the chart in the SPOI and established DFs derived from RIVs. (QAFs cannot be less than zero.)

Examples 1 and 2 are for Group 1 QA Statements.

Example 1: Crop only qualifies for the pre-established DF for grade on the chart **(Section A of the SPOI)**

Soft Red Wheat with a test weight of 54 pounds and 15% defects is designated as U.S. No. 5 wheat. There is no pre-established DF on the chart for a 54 pound test weight or 15% defects for soft red wheat (this test weight exceeds the point at which pre-established DFs begin for test weight), and there is no pre-established DF for 15% defects (15% defects exceed the point at which pre-established DFs begin for defects); however, the 15% defects do cause the wheat to grade U.S. No. 5 which qualifies the wheat for quality adjustment. The grade DF for U.S. No. 5 wheat is .332.

(a) .332 (DF for U.S. No. 5 Soft Red Wheat)

(b) 1.000 - .332 = .668 QAF

Example 2: Type/level of damage with a pre-established DF on the chart

Wheat has been sold prior to 60 days after the calendar date for the EOIP and only one type/level of damage (garlicky grade) qualified for quality adjustment. Since this type of damage has a pre-established DF on the chart (Section A of the SPOI), the QAF is determined as follows:
(a) .057 DF (for garlicky grade)

(b) 1.000 - .057 = .943 QAF

The following examples assume the insured did not elect to delay settlement of the claim for any unsold production.

Examples 3 through 11 are for Group 2 QA Statements.

Example 3: Individual pre-established DFs applied but crop does not have a pre-established DF listed for the applicable grade (Section A of the SPOI). **Corn was sold prior to 60 days after the calendar date for the EOIP.**

Corn with kernel damage (12%) and test weight (47 pounds) per bushel is designated as U.S. No. 5 corn. The test weight and kernel damage DFs would only be applied to arrive at the QAF. There is no U.S. No. 5 grade DF for corn. The U.S. Sample grade DFs would not be used in this example.

(a) .070 (DF for kernel damage)
.052 (DF for test weight)
.122 Total DFs

(b) 1.000 – .122 = .878 QAF

The QAF is .878 because ALL quality deficiencies fall under Section A of the SPOI, and it does not matter when the grain was sold (i.e. before or on or after the calendar date for the EOIP) since it did not have ZMV.

Examples 3 through 11 are for Group 2 QA Statements.

Example 4: Same scenario for corn as in example 2, except the corn remains unsold 60 days or later after the calendar date for the EOIP and it did not have ZMV.

The answer is the same as in example 2 because ALL quality deficiencies fall under Section A of the SPOI; i.e., pre-established DFs on the chart for the type/levels of damage.

Example 5: Same scenario for corn as example 2, except corn was sold to the insured's father.

The answer is the same as in example 2 because ALL quality deficiencies fall under Section A of the SPOI (i.e., pre-established DFs on the chart for the type/levels of damage), and the production is not ZMV.

Example 6: Corn has 12% kernel damage (Pre-established DF on chart – Section A of SPOI) and a test weight of 45 pounds (No pre-established DF for 45 pound test weight- Section B of SPOI). The insured's production remains unsold on the 60th day or later after the calendar date for the EOIP; therefore, a .500 DF is applicable. The QAF is determined as follows:

(a) DF is .500 (b) 1.000 – .500 = .500 QAF

The QAF is .500 because the quality deficiencies fall under Section B of the SPOI, and Section B requires a DF of .500 when the production remains unsold 60 days after the calendar date for the EOIP.

Example 7: Same scenario for corn as in example 5, except the insured feeds the damaged corn prior to 60 days after the calendar date for the EOIP. Therefore, the production was unsold production.

(a) DF is .500 (b) 1.000 – .500 = .500 QAF

The QAF is .500 because the production is fed (unsold) and quality deficiencies fall under Section B of the SPOI.

Example 8: Same scenario for corn as in example 5, except the insured sells the corn prior to the 60 days after the calendar date for the EOIP to his neighbor. The LMP is $2.40.

(a) **Scenario 1** – The neighbor pays the insured $0.25 for the corn. This would equate to a RIV of $2.15 ($2.40 - $0.25). The AIP determines the neighbor meets the definition of disinterested third party as found in the Basic Provisions. However, the AIP determines the $2.15 RIV applied by the neighbor is not reflective of the RIV applied by other buyers in the local market. Since the RIV applied by the neighbor is not reflective of the RIV in the local market, the AIP must deem the neighbor as NOT a disinterested

third party in accordance with the definition for "disinterested third party" contained in the SPOI. Therefore, the QAF is as follows:

1 DF is .500 2 1.000 – .500 = .500 QAF

The QAF is .500 because the quality deficiencies fall under Section B of the SPOI and the **buyer is NOT a disinterested third party**.

(b) **Scenario 2** – In this scenario, the neighbor buys the corn for $.75. The AIP determines the neighbor is a disinterested third party because:

1 the neighbor meets the definition for a disinterested third party in the Basic Provisions, the $1.65 RIV (2.40 - $.75) applied by the neighbor is reflective of the RIVs applied by buyers in the local market, and

2 the neighbor meets the definition for a "disinterested third party" in the SPOI. Therefore the QAF is as follows:

a $1.65 ÷ $2.40 LMP = . 688 DF b 1.000 — .688 = .312 QAF

The QAF is .312 because the quality deficiencies fall under Section B of the SPOI and the **buyer IS a disinterested third party**. Therefore, the DF used to determine the QAF is derived from the actual RIV applied by the buyer.

Example 9: Individual pre-established DFs applied in combination with pre-established DF for grade (Section A of the SPOI)

Corn with kernel damage (25%) and test weight (47 pounds) is designated as U.S. Sample Grade (kernel damage qualifies). The individual kernel damage DF's and test weight DFs would be applied in combination with the U.S. Sample Grade DFs. The corn was sold to a disinterested third party (as verified by the AIP) prior to 60 days after the calendar date for the EOIP.

(a) .256 (DF for kernel damage)
.052 (DF for test weight)
+ .077 (DF for Sample Grade)
.385 Total DFs

(b) 1.000 — .385 = .615 QAF

Example 10:

Same scenario as Example 9, except during the period prior to 60 days after the calendar date for the EOIP, the corn has a ZMV, but the insured does not want to destroy the production at that time. There are three possibilities that can occur, as follows:

(1) If the insured destroys the corn in a manner acceptable to the AIP, the claim is settled as follows:

(a) DF is 1.000 (b) 1.000 — 1.000 = .000 QAF

(2) If the insured opts to destroy the corn but does not destroy it in a manner acceptable to the AIP or opts to NOT destroy the corn, the corn is determined not to be ZMV, and the claim **is settled in the same manner as in Example 9 above.**

(3) A buyer for the corn has been found. The claim is **settled the same as in Example 9 above** since all types/levels of damage are on the chart in the SPOI (Section A); i.e., as follows:

(a) DF is .385 (b) 1.000 – .385 = .615 QAF

Example 11: Combination of type/level of damage with pre-established DFs (Section A in SPOI) and type/level of damage with no pre-established DF on the chart for the level of damage (Section B in SPOI)

Corn with kernel damage (25%) and test weight (45 pounds) is designated as U.S. Sample Grade. Since the test weight has no pre-established DF, the pre-established DF for kernel damage and the DF for Sample Grade will be ignored. The LMP for corn is $2.20. The corn was sold[1] to a disinterested third party (as verified by the AIP) prior to 60 days after the calendar date for the EOIP. The QAF for the damaged corn is determined as shown in the following steps:

(a) $ .65 (RIV for test weight)
+$.75 (RIV for kernel damage)
$1.40 Total RIV

(b) $1.40 (Total RIV) ÷ $ 2.20 (LMP) = .636 (DF)

(c) 1.000 - .636 = .364 QAF

I Crops that use the Actual Value Received to Determine QAFs

For some crops, there are no quality adjustment charts in the SPOIs, and the crop provisions provide that the dollar-and-cents value of the damaged crop is used in establishing the QAF (value of the damaged production divided by the Local Market Price as defined in the specific crop provisions) or as otherwise specified in the crop provisions; e.g., price election. Check the crop provisions for applicable crops. **This does not apply to barley, corn, canola, flax, grain sorghum, oats, rye, safflowers, soybeans, sunflowers, and wheat; see subparagraph H above for these crops. Quality provisions in specific crop options or endorsements may differ from the following procedures. Therefore, refer to the individual crop endorsement or option for specific quality adjustment provisions.**

(1) The dollar-and-cent value of the damaged production is the local market value for the same quality as the damaged production. (Refer to allowances for conditioning costs in (5) below.) When determining the value of production, consideration must be given to the test weight, damaged kernels, moisture content, substances or conditions injurious to human or animal health, and other factors which (due to insurable causes) affected the value of the production. In regards to moisture, refer to subparagraph I (4) below.

(2) The dollar-and-cents value shall NOT REFLECT ANY REDUCTION due to uninsured causes.

(3) The Actual Dollar-and-Cents Value of Damaged Production

(a) **Unsold Production (Commercially Stored, Stored on Farm, or Appraised Mature Production)**

The actual value is the value of the damaged production obtained in the local market area on the date of final inspection. Local market is the area in which the insured normally markets the crop, to the extent possible. If ZMV, refer to subparagraph J for additional information.

(b) Transportation costs. If a higher price is available at a market within a reasonable distance outside the local market area, this price is to be used with transportation costs in excess of transportation costs to the local market being deducted from such price. Transportation costs to be used in this determination must be usual, reasonable, and customary.

(c) **Fed to Livestock**

1 The actual value of fed production is the value at the local market on the date of final inspection PROVIDED the:

a Adjuster can obtain a sample that is representative of the grain being fed and from which the adjuster can obtain the test weight or the sample can be submitted to a licensed grader to grade for test weight and allowable quality defects, or

b Insured can provide weight tickets and/or grading slips from an elevator who has a licensed grader and who has obtained samples from all loads of production that is being fed; e.g., if the insured only has a test weight/grading slip from 1 truckload out of 10 truckloads harvested and being fed, this cannot be considered to be representative of all of the production.

2 If production **to be** fed is zero value, refer to subparagraph J for additional information. The insured cannot pull a sample from farm-stored production being fed and submit it for a test-weight and grade; only the adjuster or a licensed grader can extract samples from the harvested production for quality adjustment purposes.

(d) **Sold or Otherwise Disposed of**

1 The actual value is the dollar amount received or the local market value, by load, on the date of disposition; whichever is higher taking into consideration the other procedures in subparagraph I.

2 You MUST verify the value received from the settlement sheet. If the final settlement has not been made, you MUST verify with the commodity buyer what value will be paid for the damaged production. DO NOT USE LOAD TICKETS.

3 When grain qualifies for quality adjustment and the grain dealer has applied additional dockage to dock high moisture grain:

a Grain buyers sometimes apply additional dockage relative to the amount of moisture to dock high moisture grain. When the production shown on warehouse or elevator tickets has been reduced by applying such additional dockage, the gross units of wet production must be determined before the production can be adjusted.

b If the grain buyer takes this deduction by reducing pounds or bushels rather than reducing the value, the price per bushel or pounds must be adjusted to equate with gross production reported on the claim form. In such situations, do the following:

i Adjust the deduction for moisture to allowable limits.

ii Revise the settlement sheet to reflect the correct moisture deduction and allowable amount payable.

iii Divide the value received for the reduced total weight or bushels of the lot by the number of bushels determined from the original delivered weight.

iv This gives the value per bushel or pounds for the damaged crop and needs no further adjustment unless there have been uninsured causes of loss. (The sale price will reflect foreign material and other factors.) The resulting revised value per bushel or pounds divided by the appropriate local market price gives the applicable Quality Adjustment Factor that will be used to calculate the production to count.

v The crop handbook will provide additional instructions and specific entry instructions. Identify the quality adjustment in the narrative of the claim form as instructed in the appropriate crop handbook.

(e) Contracted Production

Contracted production as used in the context of this procedure refers to speculative-type contracts, not processor contracts. There are no applicable procedures for production contracted under speculative type contracts in the Crop Handbooks.

1 Contract has been fulfilled (production delivered/sold)

The actual dollar and cents value is the price received for the damaged production delivered as long as the discounts used to establish the price received is usual, customary, and reasonable. The QAF CANNOT BE GREATER than 1.000.

2 Contract has not been fulfilled (production not delivered/unsold)

Since settlement has not been made, there is no way to establish the value of the damaged production with any certainty; therefore, the production will be considered to be unsold. Establish the value as instructed in i (3) (a) above.

3 In some cases, contracts will be set up with minimum prices, which can be adjusted to a higher price after delivery of the damaged production and receipt of the minimum price. In these cases, if the contract has been fulfilled by the date of final inspection, the price the insured has received by this date is the value used (either the minimum (adjusted for quality) alone or the minimum (adjusted for quality) plus any additional value received due to the adjusted minimum price).

4 Disregard the fact that the insured may receive additional money after the claim has been finalized. The only value that can be considered is the actual value the insured has received by the date of final inspection.

Refer to examples below.

Example 1

At the time of loss adjustment, the insured had fulfilled the contract (delivered all contracted grain) and had received $4.00 per bushel, the minimum (less discounts for the damage). The value used to determine the QAF is $4.00

Example 2

Prior to loss adjustment, the insured fulfilled the contract and received $4.00 per bushel, the minimum value (less discounts due to the damaged grain). However, by the time loss adjustment was done, the insured had received an additional 25 cents per bushel, due to the adjusted minimum price. In this case, the value received is $4.25 not $4.00. Thus, the $4.25 is used to determine the QAF.

Example 3

At the time of final inspection, the insured has signed a contract with the elevator giving the elevator title to the grain in exchange for a delayed settlement. Until the insured triggers the date that settlement is to be made, no price has been agreed upon nor no money received by the insured. In cases where settlement has not been made, the production is considered unsold stored production and adjustment will be made based on the value of the damaged production that is quoted in the local market area on the date of final inspection.

(f) The affected price (value) of the damaged crop may reflect other insurable factors besides the factor(s) that qualified the crop for quality adjustment. When the price does reflect other factors, make sure double credit is not given for such factors; e.g., dockage. Refer to subparagraph l (4) below.

(4) Drying Charges and Moisture Discounts

(a) Drying Charges: No drying charges are allowed in the established value of the damaged crop.

(b) Moisture Discounts

1 Moisture adjustments for excess moisture must be made separate from and **prior to** quality adjustment and can only be made if allowed for in the crop provisions or SPOIs.

2 Allow ONLY the moisture adjustments (essentially representing standard shrink for the particular grain) provided in the crop provisions, or SPOIs, if applicable (e.g., for corn, .12 percent for each .1 percentage point of moisture in excess of 18.0 percent, etc.).

(5) Conditioning Charges

(a) If conditioning charges are incurred to obtain a higher value for the production, reduce the price of the production after it has been conditioned by the cost of conditioning to obtain its value (unless otherwise specified in the crop provisions or SPOIs); but the established value is not to be lower than the value of the production before conditioning. This adjusted value will be considered the value of the affected production for quality adjustment purposes.

(b) Drying charges for reducing the moisture content of the production are not considered conditioning charges.

(6) Refer to the individual crop handbooks for specific information.

J ZMV Production

These procedures apply to crops having quality provisions in the crop provisions or the SPOIs unless specified otherwise in the individual crop provisions or SPOIs: This procedure does not apply to production that cannot be mechanically harvested as described in PAR. 85 H.

(1) Every reasonable effort should be made by the insured and AIP to find a market for the production before it is declared zero. Communication through the RMA RO is essential to ensure that AIPs are aware of available markets for damaged production. When the only types/levels of damage or grade are ones for which there are pre-established DFs in Section A of the SPOIs, there should be very few instances, if any, where a value cannot be found for such grain. The following items are to be followed when trying to find a market for the ZMV[1].

(a) Determine if there are buyers outside of the insured's local marketing area (within a reasonable distance) willing to buy the damaged grain. Transportation costs (in excess of transportation costs to the insured's local market area) that would be incurred as a result of transporting production outside the insured's local marketing area will be considered:

1 For crops using actual value received to determine the value of the damaged production, or

2 For crops having quality adjustment provisions in the SPOIs and that have a type or level of damage for which there are NO pre-established DFs. Refer to subparagraph H above (or the SPOIs for the specific crop), or

3 For crops having quality provisions in the SPOIs and for which there is a pre-established DF for the type and level of damage, to determine whether there is a ZMV; i.e., value minus transportation cost (in excess of cost to local market) equals zero or negative value. If after the consideration of the transportation cost there is a positive value, the grain must be adjusted in accordance with the pre-established DFs, and there will be no consideration in adjusting the DF for the transportation cost.

(b) Determine if cattle or poultry feeding operations or other types of buyers are willing to buy the damaged production.

(c) Determine if the damaged production can be conditioned and sold.

1 Conditioning costs will be considered in determining the value of the damaged production; or as applicable, for some crops, the RIV of the damaged production.

2 Conditioning costs are not allowed if for the types/levels of damage(s) there are pre-established DFs shown on the chart in the SPOIs.

(d) If a market still cannot be found after the determinations in subparagraph J (1) (a)-(c) above have been made, the AIPs shall delay finalization of a claim if there is a reasonable probability that there will be a market for the damaged production within the next few weeks, (but not later than 60 days after the calendar date for the EOIP). This may happen if the markets have bought enough higher quality grain to enable them to buy the lower quality grain to blend with the higher quality grain.

(e) For crops having QA provisions in the SPOIs

If the AIP has declared the production has ZMV because there are no buyers in the insured's local market and any distant market (with fair consideration of transportation and conditioning), and the insured opts to not destroy the production:

1 For types and levels of damage that fall under Section A of the SPOIs:

Production will be quality adjusted based on the DFs in section A.

2 For types and levels of damage that fall under Section B of the SPOIs that remains unsold 60 days after the calendar date for the EOIP:

Claims MUST be settled based on .500 as outlined in subparagraph H (8) (e). **Claims CANNOT be settled based on an offer from the insured or anyone else.**

3 For types and levels of damage that fall under Section C of the SPOIs: Refer to PAR. 102.

(f) Document all determinations made in subparagraph J (1) (a)-(e) above, including names and locations of marketing outlets, values (RIVs if applicable for the crop) quoted for the damaged production, any information pertinent to possible conditioning of the damaged production, any allowable fair consideration for transportation costs of the damaged production, etc. If multiple above-zero-values (RIVs) are determined, use the highest obtainable value (after allowable adjustments for conditioning or fair consideration of transportation costs, if applicable) or lowest RIV, if RIVs applicable for the crop.

(2) Destruction

(a) When the AIP has declared production to be ZMV and the insured opts to destroy the production, the following must occur before the claim can be quality adjusted to zero production to count:

1 Prior to the insured destroying the production the adjuster:

a Must communicate the acceptable methods of destruction as stated in (2) (c) below.

b And the insured must agree, in writing, upon a method that would meet the definition in (2) (c) below.

2 The adjuster must either:

a Witness and document the destruction and the destruction method (see (2) (c) below) of the ZMV production during an on-the-farm inspection; **or**

b The adjuster shall leave a Certification Form as described in (3) below. However, before the claim can be finalized, the adjuster must follow-up with an on-the-farm inspection to verify destruction and whether the destruction method was an acceptable method as described in (2) (c) below.

(b) **Destruction Exceptions**:

Exception 1: In cases of mature unharvested production that in itself is destroyed (i.e., the production is of such quality that it could never be used for feed or any manner which would provide some value to the insured or there is no crop production on the stems/stalks, only vegetation from the stems/stalks of the plant on which the crop was growing remains.), the requirement to destroy the crop prior to indemnification can be waived by having the insured (or insured's representative) sign a Certification Form containing a statement indicating that the crop will not be harvested and will be destroyed. When there is no crop production, only plant vegetation, the vegetation does not have to be destroyed. Insureds may hay, bale, or graze the vegetation. AIPs must take pictures of the crop demonstrating that the production is in itself destroyed (e.g., only plant vegetation from which the crop was growing or should have grown remains) along with any other documentation, and this documentation must be referenced in the Narrative of the claim form or on a Special Report attached to the claim form. This documentation must be retained in the insured loss file folder.

Exception 2: Also, if the criteria are met as provided in PAR. 134, the destruction requirement is excepted for immature and mature unharvested production when destruction of such crop acreage would cause wind erosion problems. AIPs must include such documentation as described in PAR. 134 in the insured's loss file folder and note this in the Narrative of the claim or on a Special Report attached to the claim.

Exception 3: Production can be gleaned by an approved charitable organization rather than destroyed, provided all the criteria stated in PAR. 94 are met. AIPs must place such documentation as described in PAR. 94 in the insured's loss file folder and note this in the Narrative of the claim or on a Special Report attached to the claim.

THERE IS NO EXCEPTION TO DESTRUCTION WHEN PRODUCTION IS INFECTED BY A TYPE AND LEVEL OF MYCOTOXIN (OR OTHER SUBSTANCES OR CONDITIONS INJURIOUS TO HUMAN OR ANIMALHEALTH) FOR WHICH STATE AND/OR FEDERAL REGULATIONS OR GUIDELINES REQUIRE DESTRUCTION OF THE INFECTED PRODUCTION. REFER TO PAR. 66 C (3).

(c) **Acceptable Destruction Method**

An acceptable destruction method is a method that will result in the production having no possibility of being marketed or possibility of salvage use that could result in any type of compensation to the insured. Grazing and haying (even for the insured's own use) is still considered a salvage use because it results in compensation (value) to the insured; therefore, it is not an acceptable destruction method except as stated in subparagraph J (2) (b) above. Destruction of such production should be done in accordance with any applicable method prescribed by state or Federal regulations.

(3) Certification Form

When the adjuster has not witnessed destruction, a Certification Form shall be used to record the insured's certification that the production has been destroyed. However, before the claim can be finalized, an adjuster must make an on-the-farm inspection after the Certification Form has been received by the AIP to verify destruction and destruction method of the ZMV production, unless excepted as stated in one of the exceptions in subparagraph J (2) (b) above. The adjuster must document on the claim form or on a Special Report the method of destruction, whether destruction was an acceptable method, the date the verification and on-the-farm visit took place, and any other pertinent information.

(a) In lieu of or in addition to the instructions for completing a Certification Form, refer to the required completion instructions in Exhibit 11:

(b) Before leaving the Certification Form, the adjuster and insured must agree on an acceptable method of destruction as described in (2). The adjuster must also instruct the insured to enter the date the production was destroyed and document the destruction method in the "Remarks" section of the Certification Form. The adjuster must advise the insured that when the AIP has received the Certification Form back from the insured certifying destruction of the production that another inspection will be made to verify destruction of the production.

K Consolidating QAF Entries

When there are loads of production that have the same QAFs, these loads can be consolidated on one line in the part of the Production Worksheet for harvested production as long as the other information (such as FM and moisture) is the same.

97 ADJUSTMENTS FOR MOISTURE

A Policy or Endorsement Provisions

(1) When crop provisions provide for adjustment for excess moisture, the mature production will be reduced when it meets the requirement stated in the crop policy/endorsement. If moisture adjustment for excess moisture is applicable, it is applied prior to any adjustment for quality.

(2) Hybrid Corn Seed Crop Provisions and Hybrid Sorghum Seed Crop Provisions provide for adjustments for excess and deficient moisture percentages, as set forth in the individual crop provisions. Refer to the specific crop provisions and crop handbooks.

(3) Moisture charts are in the Reference Material Section contained in applicable crop handbooks and provide the moisture adjustment factor for the percentage of moisture. Use these charts only when computing net production.

B Moisture Determinations from Sold Production

Moisture percentages are established from the individual load slips or settlement sheets, as explained in this subparagraph. Grain dealers use various methods to dock high moisture grain. One method reduces the price in relation to the amount of moisture on the basis of currently established standards (charts). Another method applies additional dockage, relative to the amount of moisture, which is determined from established guidelines. Where the production shown on warehouse or elevator receipts has been reduced by applying such additional dockage, the gross units of wet production and the actual moisture percentage must be determined before the crop can be considered for a moisture adjustment.

C Moisture Tests of Farm-Stored or Unharvested Mature Production

(1) Moisture tests can be performed by:

(a) Grain handlers at a commercial facilities that buys or stores grain,

(b) FGIS Field Offices or FGIS-designated or -delegated entities, or

(c) Adjusters; provided the adjuster has a properly maintained, functioning, and calibrated moisture tester.

(2) Samples for Moisture Tests

(a) The adjuster is responsible for ensuring that any sample used to make a moisture determination is representative of the production in the entire storage structure. This is done by using a probe (may need an extension on the probe) to take samples from various depths and areas of the bin or

other various means to derive a moisture percentage that is representative of the entire storage structure.

(b) Only the adjuster can take samples of farm-stored production for moisture determinations, unless excepted as stated in PAR.'s 104 or 105.

D Consolidating and Averaging Moisture Percentages. For consolidating and averaging moisture percentages on the claim form, refer to PAR.'s 99 and 100.

E Claim Form Entries. Entries for moisture factors (and/or moisture percentages) on the claim form are made as instructed in the individual crop handbook.

98 ADJUSTMENTS FOR FOREIGN MATERIAL (FM) AND IF ALLOWED, DOCKAGE

A General Information

(1) For the purpose of determining:

(a) Production to count, adjustments of gross production due to FM in most instances will be allowed (there may be other items such as conspicuous admixture for which gross production may be adjusted, as stated in A (6) below). Adjustment for dockage is NOT allowed unless it meets the criteria stated in A (4) or (5) below. If the insured did (or will) receive compensation for the FM (or dockage, if allowed as provided below), deductions cannot be made.

(b) The entry for FM% (Item K_1), if any, on the PW, follow the instructions below:

(2) The crop provisions for grain and seed crops state the following in the "Settlement of a Claim" section: **"Any production harvested from plants growing in the insured crop may be counted as production of the insured crop on a weight basis."** For most crops, such production is defined as dockage by FGIS (for some crops where there is no FGIS dockage definition, such production would be included in FM, as defined by FGIS.) However, there are some crop provisions that specify that the crop will be graded in accordance with the State grading standards or grading standards of another entity's. In those cases, such production is defined as dockage, as stated in the applicable grading standards of the State or other entity. This policy provision will be administered as stated below.

(3) Refer to Exhibit 17 for a chart of the FGIS or applicable State or other entity definitions. The chart is current as of the date shown on the bottom of the pages contained in Exhibit 17. These seldom change. However, to be assured that the FGIS definitions are current, refer to the definitions shown in the U.S. grade standards for the crop (if U.S. grade standards are not available for the crop, refer to the FGIS directive for inspection standards for the crop). These can be found at the FGIS website or via a link on the RMA website, located where the loss adjustment standards handbooks are located.

(4) If dockage is due to an insured cause of loss, the percentage of both FM and dockage may be used. Keep in mind that dockage can result from improper harvest of the crop, not following good farming practices due to improper

applications of weed control, etc., so caution must be used when determining that the dockage was due to an insured cause. An example of an insured peril causing dockage is excess precipitation that caused weed or insect control measures to be ineffective and resulted in other plants (or for the geographical area, an above normal amount of other plants) growing in the crop from which production is harvested with the insured crop.

(a) For crops having FGIS definitions for FM and dockage (except for dry peas*) or where crop provisions require a State or other entity grading standards for the crop, gross production can ONLY be adjusted for FM (as defined by FGIS for the respective crop or as defined in applicable State or other entity grading standards when required by individual crop provisions), UNLESS it is determined that the dockage is due to an insured cause.

(b) For crop grading standards or inspection standards that have definitions for "dockage" ONLY **and** definitions for stones, conspicuous admixture, and admixture; adjustments for dockage is not allowed UNLESS dockage is due to an insured peril, as stated in A (7) below. The applicable grading or inspection standards will be FGIS', unless the crop provisions specify grading standards of a State or some other entity. However, adjustments for stones, conspicuous admixture, and admixture are allowed, provided the insured was not compensated for these. These crops do not contain all three of these definitions. Some contain only one and some contain two. Refer to Exhibit 17.

(5) In addition to FM, the Dry Pea Handbook allows the gross weight of peas to be adjusted by the percentage of dockage as defined by the US Standards for Dry Peas.

(6) For crop grading standards or inspection standards that have a definition for "dockage" ONLY and NO definitions for stones, conspicuous admixture, and admixture; adjustments for dockage is not allowed unless the dockage is due to an insured cause of loss and the insured has not received compensation for the dockage. The applicable grading or inspection standards will be FGIS' unless the crop provisions specify grading standards of a State or some other entity. Refer to Exhibit 17.

(7) For crop grading or inspection standards that have a definition for FM ONLY, adjustment for FM is allowed, unless it is determined that the FM includes production from other plants growing in the crop. The applicable grading or inspection standards will be FGIS' unless the crop provisions specify grading standards of a State or some other entity. If the FM percentage for the crop, crop year, and geographical area is in excess of what other producers in the area have delivered to buyers and it cannot be determined that the excessive amount is due to insurable causes, adjustments for FM is not allowed. If there are no other producers in the area, contact the RMA's Product Administration and Standards Division, Loss Adjustment Standards Branch (LASB). LASB will contact FGIS (or applicable State or other entity, if grading standards for a State or other entity is specified in the crop provisions for the respective crop) for the average FM for the crop. Refer to Exhibit 17.

(8) FM (and other terms, as allowed above) is determined on the basis of weight (not volume).

B Dockage and/or FM terms used by buyers

(1) The term “FM” or “dockage” is sometimes used by buyers differently than the FGIS definition for “FM.” or “dockage.” (This may also be true of “FM” and “dockage” definitions defined in grading standards for a State or other entity; e.g., some buyers may combine FM and dockage into a single percentage and call it dockage which would not meet the aforementioned definitions for FM or dockage).

(2) The adjuster must determine that the buyer’s term for FM (dockage, if allowed as stated in A above) is the same as FGIS’ definitions for the crop or other FGIS terms allowed as specified above (or if the crop provisions specify that grading standards of a State or other entity will be used, the adjuster must determine that the buyer’s term for FM (dockage if allowed as stated in A above) is the same as the definitions in grading standards of the applicable State or entity.

(3) When the term(s) for “FM” or “dockage” used by the buyer is not consistent with the FGIS definitions (or definitions in the grading standards of a State or other entity specified in the crop provisions for the respective crop), the adjuster must work with the buyer to determine if there is a way to determine the percentage of FM (dockage, if allowed above) deducted by the buyer that is consistent with FGIS’ definition for FM (and FGIS’ definition for dockage, if allowed above) or FM (dockage, if allowed above) definitions in the grading standards of a State or other entity, if grading standards of a State or other entity standards is specified in the crop provisions for the respective crop.

For Example: The buyer may just have a column for “dockage” on the weight ticket or settlement sheet. That figure cannot be used as an adjustment for FM unless the buyer can provide evidence that shows they have a breakdown of FM and/or dockage as defined by FGIS. If the buyer can provide evidence that they have the breakdown of the percentage of FM (or dockage if allowed above) as defined by the FGIS definitions, then the percentage for the applicable FM (or dockage if allowed as stated above) can be accepted. Such evidence will be filed and retained in the insured’s loss file. However, if the buyer cannot provide such evidence, the percentage for FM (or dockage if allowed as stated above), shall not be allowed.

C Commercially Stored or Sold Production

(1) When a FM percentage(s) is shown on producers' records; i.e., summaries, settlement sheets, individual load slips, enter in the FM column of the claim form the actual percent to the nearest tenth of FM (dockage if allowed for the crop as stated in A above or as determined in B above) that the buyer has actually deducted from the gross production sold (the amount entered in the column for gross production on the claim form) or if unsold, the amount the buyers in the area would deduct. Refer to PAR.’s 99 and 100 for consolidating or averaging FM percentage entries on the claim form.

(a) If you are not certain if the elevator allowed 1% of a 4% FM and only charged the producer for 3%, contact the elevator either by phone or visit to ascertain what percentage was actually deducted. If still in doubt, show the full FM, and explain in the narrative.

(b) Show the FULL AMOUNT (percentage of FM deducted regardless of the grade tolerance (e.g., the U.S. Standards for Grain allow 2% FM on soybeans which grade No. 2). If the producer's records show 4% FM actually deducted, the 2% FM allowed in the U.S. Standards for Soybeans is NOT deducted from the 4% on the producer's records. Thus "4.0" is entered in the FM column on the claim form.

(2) When FM (and /or dockage, if allowed for the crop as stated in A above) is shown as a price discount and not as a percentage (provided production does not qualify for quality adjustment), try to ascertain the percentage of FM (and/or dockage if allowed as stated above) contained in the production. Make no entry in the FM column of the claim form if this percentage cannot be determined.

(3) If the FM (and/or dockage if allowed as stated in A above) is accounted for under quality adjustment, even though FM may not have been the quality adjustment determining factor, DO NOT show the FM percent in the FM column of the claim form.

(4) Do not include any adjustments for moisture in the FM entry.

D Farm-Stored Production

(1) FM (and/or dockage, if allowed for the crop as stated in A above) as defined by FGIS, (Exhibit 17) can be determined by the adjuster if the adjuster has the proper equipment and follows FGIS instructions (refer to E below) and the adjuster and the insured agree there are no quality deficiencies other than test weight.

(2) The adjuster may take samples to a local elevator to obtain the percentage of FM (and/or dockage percentage, if allowed for the crop as stated in A above), **provided** the insured agrees that there is no quality involved. However, if the adjuster and the insured are unsure, the adjuster must obtain a sample of the farm-stored production and transport or mail it to an FGIS office (AMS if applicable or if the crop provisions for the respective crop require grading standards of a State or other entity, the applicable sites specified by the State or other entity) for these determinations.

(3) If samples are sent to FGIS or a FGIS-designated or -delegated entity (AMS if applicable), follow FGIS instructions for the crop, particularly regarding sample sizes, packaging, and transportation. This information can be obtained at FGIS' website or by phone call to an FGIS field office. If the crop is one that requires grading standards of a State or other entity and the sample is mailed, follow the instructions provided by the State or other entity regarding sample sizes, packaging, and transportation.

(4) If the adjuster performs FM or dockage tests for crops using FGIS grading or inspection standards, the grain must be measured, and weighed as described in subparagraph E below or from the FGIS publication *"Practical Procedures for Grain Handlers*." This publication can be downloaded and printed from the FGIS website or via a link from the RMA website, located in the same location as the loss adjustment standards handbooks. If the crop is not included in this handbook, contact FGIS to determine where this information can be obtained. For crops for which the crop provisions require grading standards of a State or other entity, obtain instructions from the applicable State or entity. If the State or

other entity will not provide such instructions, samples must be transported or mailed to a facility designated by the State or other entity.

(5) The FM percentage (and/or dockage percentage, if allowed for the crop as stated in A above) to the nearest tenth (that the buyer would actually deduct from the gross production) is entered in the appropriate column for FM on the claim form. Refer to the specific crop handbook instructions.

E Determining Dockage and FM on the Farm

The following materials and instructions are to be used when determining dockage and FM on the farm for wheat and barley. For a large portion of the crops, screen sizes and procedures can be obtained from the FGIS publication *"Practical Procedures for Grain Handlers."* This is the same publication referred to in D (4) above. If the crop is not listed in this publication, contact FGIS to obtain this information or submit the adjuster-obtained samples to FGIS. For crops for which crop provisions require grading standards for a State or other entity, obtain the instructions from the applicable State or entity. If the State or other entity will not provide such instructions, the samples must be transported or mailed to a facility designated by the State to grade.

(1) Materials

(a) Screen "A" - 12/64" round aperture (for wheat).

(b) Screen "B" - 8/64" triangular aperture (for wheat).

(c) Screen "C" – 5/64" or 4.5/64" round aperture (for wheat).

(d) Screen "D" – 5/64" triangular aperture (for barley).

(e) Pan - round non-perforated (610-E).

(f) Funnel.

(g) One-pint or one-quart grain measuring bucket.

(h) One-pint or one-quart grain measuring scale (each scale must be calibrated to the respective bucket).

(i) Leveling stick.

(2) Weight and FM

(a) Measure and weigh grain as outlined in PAR. 101 B and C, except the samples will not be "clean" (free of FM and/or dockage (as defined by FGIS)).

Determine the weight of one pint or one quart of grain by use of the "lbs. & ozs." Line on the scale. (One pint = one pound.)

(b) Refer to subparagraph (1) above: screens "B" and "C" are both wheat screens. Use screen "B" in the presence of buckwheat infestation. Use screen "C" under normal conditions.

(c) For wheat, place screen “B” or “C,” whichever is needed, in the non-perforated pan, insert screen “A” next and spread weighed grain over screen “A”. Use a circular shaking motion to cause all dockage to pass through the screens into the pan. For barley, follow all the same instructions, except only screen “D” is used. (See subparagraph (1) above for screens A, B, C, and D.)

(d) The screenings in the pan along with anything remaining in the top screen is dockage.

(e) From the dockage-free sample, remove all the matter other than wheat that remains in the sample by hand picking. The matter that was handpicked is FM. Establish the amount of FM by weighing the handpicked matter with the bucket and scale. Use the “% of lbs.” Line on the scale to make the final determination of the FM percentage.

F FM Factor

The FM factor is computed by subtracting the determined percent of FM (and/or dockage if allowed as outlined in subparagraph A above) actually deducted by the buyer from 1.0000, provided what the buyer designates FM (and dockage if allowed for the crop) meets the definitions found in Exhibit 17. (Example: 1.000 - .030 (FM) = .970 FM factor.) When this factor is applied to the production to count, it is reduced. (For dry peas, this factor would also include any applicable dockage; see subparagraph A above and the Pea LASH.)

G Unhusked Cribbed Corn. (Husk factor is NOT TO BE ENTERED in the FM % column of the claim form.

Unhusked cribbed ear corn on which none of the husks have been removed is unusual, but when it occurs, determine the husk factor and apply this factor to the calculated gross bushels to determine the production to be entered on the claim. Determine the husk factor as follows:

(1) Fill a straight-sided container (wooden box 24” X 24” X 12”) with a representative sample packed to the same density as the crib.

(2) Remove husks. Put husked ears in the box. Pack and measure depth.

(3) Divide the depth of the husked corn by the depth of the unhusked sample. Round to two decimal places. Retain a copy of all calculations in the insured's contract folder.

99 CONSOLIDATING MOISTURE OR FM PERCENTAGE ENTRIES ON THE CLAIM FORM

A General Information and Instructions

(1) Adjusters may consolidate loads having the same moisture or FM percentages (and/or dockage percentage if allowed by PAR. 98 A) on a single line of the claim form (as listed below) unless separate lines are required for reasons other than FM or moisture differences. This applies to the crops listed in PAR. 96 C (1)(d) 1 a. However, for dry peas FM only is applicable; a moisture percentage is not applicable – refer to PAR. 98 and Pea Loss Adjustment Handbook for FM entries) and for rice, only moisture is applicable; FM and dockage are not applicable).

(2) Moisture adjustment is not allowed for flax in accordance with the Small Grains Crop Provisions.

(3) When quality adjustment applies, list quality-adjusted production on separate lines.

(4) When there are two or more individual settlements or summaries, list each on a separate line.

(5) To consolidate percentages, total the production of the loads with the same percentages, and make a single entry for such loads.

100 AVERAGING MOISTURE OR FM PERCENTAGE ENTRIES ON THE CLAIM FORM

A General Information and Instructions

(1) When the elevator has averaged the FM (and/or dockage if allowed by PAR. 98 A) or moisture percentages on the settlement or summary sheet, adjusters may average moisture or FM (and/or dockage as stated in PAR. 98 A) percentage entries on a single line of the claim form or production worksheet (as listed below) unless separate lines are required for reasons other than moisture and/or FM (dockage if allowed as stated above) differences.

(2) Moisture Adjustment

(a) This applies to the crops listed in PAR. 96 C (1) (d) 1 a. However, for dry peas FM only is applicable; a moisture percentage is not applicable – refer to PAR. 98 and Pea Loss Adjustment Handbook for FM entries) and for rice, only moisture is applicable; FM and dockage are not applicable).

(b) Moisture adjustment is not allowed for flax in accordance with the Small Grains Crop Provisions.

B Entering Averaged Moisture on the Claim Form

(1) Averaged Moisture percentages are entered on one line on the claim form except when:

(a) Quality adjustment applies. List quality-adjusted production on separate lines.

(b) Elevator settlements or summaries are based on consolidated or averaged FM and there are two or more individual settlements or summaries, list each on a separate line.

(2) To enter averaged percentages, use the same average provided on the elevator settlement or summary sheet, after verifying its acceptability. Use of averaged percentages is authorized ONLY when the elevator has calculated and settled on the basis of an average on the settlement or summary sheet and the determined average is acceptable to the adjuster. **Exercise caution in determining acceptability of averages because of the potential for significant impact on indemnities; e.g., one 20,000# load @ 15% moisture and one 4000# load @ 25% moisture (Simple avg. = 20%; Weighted avg. = 16.7%). Use of the simple average in this case would not be acceptable.**

101 TEST WEIGHT AND TEST-WEIGHT FACTOR

A Test Weight of Sold Production. The test weight may be taken from the settlement sheet or load slips. If quality is involved, the TW from the settlement sheet or load slips can only be used if the TW has been determined by a licensed grader.

B Test Weight for Farm-stored Production

(1) For crops having a unit of measurement other than pounds, the test weight and test-weight factor (TWF) must be used to determine the number of bushels on the basis of gross weight. For those crops using pounds as a unit of measurement, the test weight is used to determine the number of pounds. (Farm-stored crops that use pounds as their unit of measurement include: canola/rapeseed, dry beans, dry peas, mustard seed, popcorn, rice, safflowers, and sunflowers.)

(2) For grain storage structures, the test weight must be taken before dockage and FM are removed (FM (and/or dockage if allowed by PAR. 98) will be accounted for in column specified for FM on the PW (claim form)).

(3) **If samples of farm-stored production of barley, canola, flax, rye, non-oil type (confectionary) sunflowers, and wheat are going to be submitted to FGIS,** a test weight must be taken during the farm inspection, unless a special request is made to FGIS for a test weight prior to removal of dockage or FM. (Test weight is not a grading factor under the U.S. grading standards for canola or as a factor for quality adjustment.) This must be done because FGIS determines the test weight for the crops listed in this subparagraph from a dockage-free sample (FM-free for oil-type sunflowers), and the test weight entered on the PW, as instructed above, is prior to removal of dockage or FM.

(4) If test weight is measured in tenths of a pound, record weight to tenths in Section II of the Production Worksheet, unless the AIP has specified otherwise.

(5) **For quality adjustment (QA):**

(a) Test-weight determinations for barley, flax, rye, non-oil type (confectionary) sunflowers, and wheat must be made from a dockage-free sample for oil-type sunflowers, from an FM-free sample). (Dockage and FM are as defined by FGIS.).

(b) Enter the test weight determined for QA purposes in the Narrative section of the PW (claim form). (The test-weight determined for QA purposes may differ from the test weight entered in the test-weight column on the Production Worksheet since the test-weight determinations specified in B (2) above must be made before the removal of dockage and/or FM.)

(c) Test-weight determinations for quality adjustment must be performed by the adjuster or by a grader licensed under the authority specified in the crop provisions in accordance with the applicable FGIS official standards.

C Determine test weight by:

(1) Mixing and pouring samples of the stored grain into the test bucket from a height of approximately four inches (a normal hand width) above the bucket to simulate natural fall.

(2) Filling the test bucket to overflowing and leveling with prescribed leveling stick. Unless the test-bucket manufacturer's instructions specify otherwise, level by using THREE zigzag motions across the rim of the grain bucket with the leveling stick held at a 90 degree angle to the top of the bucket (do not use scale bar to level the grain in the bucket and do not pack).

(3) Weighing the leveled bucket of grain using a calibrated scale. Determine the weight by using the "pound per bushel" line from the scale (to tenth of a pound if the test weight bucket shows pounds to tenth).

D Test-Weight for Ear Corn

For ear corn, a representative sample must be shelled to make the test weight determination (refer to corn handbook for specific instructions).

E Test-weight and Test Weight Factor for Corn Silage and Sorghum Silage
To determine the test weight and test weight factor for corn silage and sorghum silage, refer to the specific instructions in the Corn LASH for corn silage, and in the Sorghum Silage LASH for sorghum silage.

F Test-weight factor

(1) Determine the test-weight factor by dividing the determined actual test weight by standard test weight for the crop, to three decimal places. Refer to Exhibit 21 for a list of standard bushel weights (standard test weights) by crop.

(2) Do not use the Test-Weight Factor for the following pound crops:

Canola/rapeseed, dry beans, dry peas, mustard seed, popcorn, rice, safflowers, or sunflowers; use actual test weight.

(3) For unweighed farm-stored barley, corn, grain sorghum, hybrid corn seed, hybrid sorghum seed, oats, popcorn, soybeans, and wheat that is:

(a) Shelled or threshed whole grain, USE the combination test-weight pack factor as specified in PAR. 110 D and the applicable crop loss adjustment handbooks.

*** (b) Other than shelled or threshed whole grain (e.g., ear corn), use the test-weight factor (see F (1)) instead of the combination test-weight pack factor as specified in PAR. 110 D and the applicable crop loss adjustment handbook.

(4) **For corn insured as grain that is to be harvested and either ground and stored as corn and cob meal (ground ear corn) or chopped for earlage, a pre-harvest appraisal is required to establish the production. (Refer to PAR. 85.)**

***

***

102 QUALITY ADJUSTMENT WHEN PRODUCTION CONTAINS MYCOTOXINS OR OTHER SUBSTANCES OR CONDITIONS AT LEVELS INJURIOUS TO HUMAN AND ANIMAL HEALTH

AIPs MUST INFORM INSURED TO NOT COMMINGLE UNITS IN ACCORDANCE WITH PAR. 105 B (1) IF MYCOTOXINS OTHER THAN VOMITOXIN ARE SUSPECTED.

A General Mycotoxin Information

(1) Due to improved testing procedures, availability of test kits, animal and human health concerns, and general awareness of grain quality, the presence of mycotoxins in grain is becoming an ever-increasing factor in its sale.

(2) Mycotoxins are the by-products of fungal activity promoted by environmental conditions, which are stressful to the affected host plant. Actual production yields may or may not be adversely affected by the presence of the organism, but harvestability and production quality (hence market value) may be adversely affected. Although over 200 mycotoxins have been identified, Aflatoxin, Fumonision, and Vomitoxin have specifically caused insured grain to be unmarketable.

(3) Mycotoxins at high enough levels in production are considered a substance or condition that can be injurious to human or animal health. FDA has identified specific mycotoxins (such as Aflatoxin, Vomitoxin, and Fumonisin) at the levels at which they are injurious to animal and human health. Of all the substances/conditions identified as injurious to human or animal health, Aflatoxin and Vomitoxin have been the most common ones affecting quality adjustment of insured grain.

B The Level of Substance or Condition May Qualify the Production for QA

If the level of the substance or condition in the production is at a high enough level to qualify the production for QA (refer to the applicable SPOI, crop provisions or quality endorsement), the production to count will be adjusted for quality in accordance with the applicable policy provisions or SPOIs, provided **ALL** of the following criteria are met:

(1) For production that will be stored on the farm or in commercial storage, the appropriate samples must be obtained by the adjuster (or a trained disinterested third party approved by the AIP) prior to the production entering storage (other than the exception in (2) below) because mycotoxins have the potential to increase in stored production. Other substances or conditions may also have the potential to increase in storage. If appropriate samples are not obtained prior to storage, such production will not be adjusted for quality due to a substance or condition injurious to human or animal health (refer to exception in (2) below). **Therefore, it is important that AIPs inform agents and insureds of the need to notify the AIP anytime that the insured suspects that a mycotoxin or other substances or conditions could be present in the production so the AIP can inspect the crop prior to storage.**

(2) **EXCEPTION FOR OBTAINING SAMPLES PRIOR TO STORAGE:** ONLY FOR CROPS WHICH CONTAIN VOMITOXIN:

Because the potential for Vomitoxin to increase in farm- or commercially-stored production is very slight, samples to determine Vomitoxin levels may be obtained

after production is stored on the farm. Refer to subparagraph E for sample requirements.

(3) Analysis of the samples pulled by the adjuster (or a trained disinterested third party approved by the AIP) MUST be performed by an approved laboratory. Refer to subparagraph H below for Criteria for AIP-Approved Testing Facilities (laboratories).

(4) The presence and level of the condition/substance injurious to human/animal health must be due to insured causes. For example: Factors contributing to plant stress and subsequent mycotoxin presence such as insufficient irrigation (under an irrigated practice), the use of marginally adapted varieties, non-weather-related delayed harvest, inappropriately high plant populations, etc., will result in the determination that the mycotoxin was the result of uninsured causes.

C Flooded Crop May Be Contaminated With Sewage, Pathogenic Organisms, Pesticides, Chemical Wastes, Heavy Metals, or Other Toxic Substances

(1) Even if a mature crop can be mechanically harvested, if the FDA or other State or Federal Agency issues a written statement that crops in a certain geographical area cannot be marketed even for animal feed because of contaminants, the crop will be declared zero production to count, provided the production is destroyed in a manner acceptable to the AIP prior to finalizing the claim. Refer to PAR. 96 J (2) for requirement for destruction and verification of destruction.

(2) If the State or Federal Agency indicates the crop can be marketed even for animal usage, the insured will be expected to harvest the crop, unless the costs of conditioning results in ZMV. If the crop is harvested and conditioned, and testing determines the crop contains levels of contaminants that are in excess of the levels the State or Federal Agency declares as safe for animal usage, such production will be declared zero provided the crop is destroyed in a manner acceptable to the AIP prior to finalizing the claim. Refer to PAR. 96 J (2) for requirements for destruction and verification of destruction. Follow the procedures below for samples, testing, etc.

(3) Documentation Requirements. Document on a Special Report and attach the copy of the FDA, State, or Federal issuance which states specifically, the: (1) crops prohibited from being marketed due to level/type of contamination, (2) specific geographical areas that are prohibited from marketing the crop for human or animal food, and (3) specific types and/or levels of substance/condition that prohibits the crop from being marketed. Retain in the insured's claim file.

D Coded Cause of Loss for Substance/Condition injurious to human/animal health

When the level of substance/condition qualifies the production for QA, the insured cause of loss is considered due to disease or adverse weather; e.g., mycotoxins are considered due to disease and production covered in flood waters that is contaminated with sewage, pathogens, pesticides, etc., contained in the flood water as described in C above is due to adverse weather; however, the cause of loss recorded on the claim form will be "Mycotoxins or "other condition/substance" (cause of loss code 82) in both cases.

E Requirements for Samples Required Prior to Storage

*** Except for Vomitoxin-contaminated crop production, any production contaminated with any other mycotoxin, substance, or condition injurious to human or animal health, must have samples obtained prior to the production going into storage. (For farm-stored
*** production that is contaminated with Vomitoxin, subparagraph G below will apply.)

(1) When production will be harvested and farm-stored:

(a) AIPs can allow insureds to leave the number of RSAs as stated in 88 D (1) (a) and the location described in PAR. 88 E (1) in their fields from which the adjuster can take representative samples. The size of the representative sample areas must be at least the size needed in order to obtain the size of sample to forward to the approved testing facility; or

(b) The adjuster or a trained disinterested third party approved by the AIP can obtain samples from harvested production before it goes into farm-storage. Samples pulled by anyone other than the adjuster or a trained disinterested third party approved by the AIP cannot be used for quality adjustment.

(2) When the insured is not going to harvest, is uncertain of whether to harvest, or has discontinued harvest due to mycotoxin levels (or other condition or substance) levels in the harvested production, the adjuster must obtain samples for mycotoxins (or other condition or substance) from samples taken from representative sample areas of the standing crop in the field if the standing crop is representative of the acreage. ONLY the adjuster is authorized to obtain samples from the standing crop.

(3) Adjuster-selected representative samples from unharvested RSAs of the field:

(a) Select at least the minimum number of representative samples required by the applicable crop LASH for appraisals (e.g., minimum number of samples shown in Table A of “Reference Material” section of the crop LASH) from the minimum number of RSAs specified in PAR. 88). If the minimum number of representative samples does not result in the needed sample size (e.g., 10 pound sample) required by the approved testing facility, select enough additional samples to meet the required sample size (e.g., 10 pounds).

(b) The representative samples of production from the representative areas of the field are to be used for determining the appraised production as well as the samples needed for the mycotoxin (or other substance or condition) testing and any other quality considerations.

(c) Refer to (4) and (5) below for instructions regarding samples for testing.

(4) Adjusters are to obtain samples for mycotoxin testing (or testing for other substance or conditions injurious to human and animal health) from the selected representative sample areas of the field(s) or subfield(s) utilizing the Hand Sample Method, or if the insured will agree, the Harvested Sample Method (Refer to F below).

(5) For mycotoxin (or other substance or conditions injurious to human and animal health) testing:

(a) For the crops listed in PAR. 96 D, one blended sample of all the hand harvested or harvested samples obtained from the appraised representative areas of all fields or subfields for the unit appraised is permitted if the damage appears similar and the insured agrees with using one blended sample. However, since mycotoxin (or other substance or condition) levels can vary from field to field (or subfield to subfield), the insured and AIP can agree to obtain a sample for testing for each field or each subfield (e.g., three fields in a unit (no subfields used) would equal three separate samples for testing for the unit). Also, if the AIP and insured agree to take and submit multiple samples for testing from a field or subfield, then the test results from the multiple samples from the field or subfield must be averaged to represent the mycotoxin (or other substance or condition) level of the entire acreage in the field, subfield, or unit.

(b) Do not blend samples suspected of containing levels of mycotoxins (or other substance or condition) with less than the minimum action or advisory levels from FDA, State, or other Federal agency for the particular mycotoxin (or condition or substance) with samples exceeding the minimum levels. Refer to the table in subparagraph O (6) or P (5) below.

(6) Refer to subparagraph I for requirements for sample size for testing, maintenance of sample until shipment, and the required timeframe for transporting or shipping the sample to the approved testing facility.

(7) **MYCOTOXIN CAUTION**: RMA has been advised by grain specialists that adjusters should wear protective clothing, including protective gloves and dust mask when handling mycotoxin infected grains. If a dust mask is not used, adjusters should at least position themselves so they are NOT downwind of any grain dust coming from the harvesting equipment or from any grain dust that might occur during the collection of the required representative samples.

(8) Testing must be done by a testing facility that meets the criteria for an AIP-approved testing facility as outlined in subparagraph H.

F <u>Representative Sampling Methods for Samples Required Prior to Storage</u>

(1) Hand-Harvested Method

(a) If the insured is not willing to harvest the selected representative areas, the adjuster must hand harvest representative samples from the selected representative areas of the production.

(b) After the representative samples have been taken, the sample for testing (refer to required size in subparagraph I (1) below) must be obtained and must be identified by unit number if one blended sample for a unit is used (or field I.D. and/or subfield I.D. (if applicable) and unit number if a sample was taken for each field or subfield). The samples must be transported or sent to the approved testing facility within the timeframe specified in subparagraph I (3) and maintained in accordance with subparagraph I (3).

(2) Harvested Method

(a) If the insured will agree, have the insured harvest the selected representative areas of the field(s) or subfield(s) in the adjuster's presence and to the adjuster's satisfaction.

(b) After the representative areas have been harvested, the adjuster MAY obtain the samples by either of the following methods:

1 If the adjuster has a **hand probe**, the adjuster can extract grain from the combine hopper, wagon, or other temporary holding structure used for the harvested production from the representative area. Obtain the required sample size (refer to subparagraph I (1) below) by using the hand probe and the FGIS sampling patterns as shown in (d) below as a guide to collect samples.

2 If the adjuster **does NOT have a hand probe**, have the insured unload the combine hopper into a wagon, truck, or other temporary holding structure used for the harvested production from the representative area, and collect the required sample size (see subparagraph I (1) below) from the stream of production at the beginning, at the end, and periodically in between as the production is being emptied from the combine.

(c) After the sample(s) have been taken, the sample for testing must be identified by unit number if one blended sample for a unit is taken (or field I.D. and/or subfield I.D. (if applicable) and unit number if a sample was taken for each field or subfield). Because of the possible increase in mycotoxins due to high humidity, heat, and moisture content of the grain, the adjuster is to take samples for mycotoxins immediately after harvest. (Do not have the insured harvest and leave the grain in a wagon, combine hopper, or other structure, then return the next day to obtain the samples). Samples must be transported or sent to an approved testing facility within the timeframe stated in subparagraph I (3) and maintained in accordance with subparagraph I (3).

Continued on the next page.

(d) Representative Sampling Pattern Guidelines

The following examples are standard sampling patterns recommended by FGIS, and are to be used as a guide for locations of extraction when extractions are made with a probe. Insert the probe at the points marked, with the tip of the probe angled ten degrees. (FGIS indicates that nearly 90 percent of error associated with Aflatoxin testing can be attributed to how the original sample was extracted[1].)

Example 1:

```
-X-     -X-             -X-

            -X-

  -X-             -X-         -X-
```

Seven-probe pattern flat-bottom truck or trailer containing grain more than four feet deep.[1]

Example 2:

```
-X-     -X-         -X-     -X-

            -X-

-X-     -X-         -X-     -X-
```

Nine probe pattern for flat-bottom trucks or trailers containing grain less than four feet deep.[1]

Example 3:

Probing Combine Hoppers. From the top of the combine hopper, insert the probe slightly off-center at a ten-degree angle, and probe the entire depth of the hopper. [1]

*** G <u>Sample Requirements for Farm-stored Production Contaminated with Vomitoxin</u>

Samples may be obtained from the storage structure. When samples are obtained from storage, refer to subparagraph I for the required sample size and transportation requirements.

[1] Grain Inspection Handbook- Book I – Grade Sampling, Chapter 2, Probe Sampling published by GIPSA

H Criteria for AIP Approved Testing Facilities

To be an approved testing facility, the testing facility must meet all of the following criteria:

(1) Perform Quantitative Tests

(a) For mycotoxins: The test results on the production must itemize results in parts per million (ppm) or parts per billion (ppb) of mycotoxin present. The quantitative test kits used to perform the test must be verified by FGIS and must have a test-kit range of 5-300 ppb. A list containing quantitative test kits certified by FGIS can be found in a document entitled "GIPSA Performance Verified Rapid Test Kits for Analysis of Mycotoxins" at the following link or successor link: http://archive.gipsa.usda.gov/tech-servsup/metheqp/testkits.pdf

(b) For other types of substances or conditions: The test results on the production must itemize the results in the same unit of measurement (e.g., ppm or ppb or some other amount) as is stated in the Advisory or Action level (e.g., action levels for Aflatoxin is in ppb) issued by FDA or other public health organizations of the United States or public health agency of the applicable State in which the insured crop is grown.

(2) Be a recognized commercial, governmental, or university testing laboratory (including approved testing facilities on site at the delivery point of the buyer; i.e., elevators) that uses industry recognized sample sizes, equipment, and procedures for testing the specific type of mycotoxin (or some other condition or substance injurious to human or animal health);

(3) Be a disinterested testing facility. A disinterested testing facility is a facility not involved in buying or selling the production in question. A facility which buys production is not restricted if it does not buy or had no intention of buying the production from the insured for whom it is doing the testing. If a test was made by a facility that was a potential buyer but refused the production because of the mycotoxin (or if applicable other condition or substance injurious to human or animal health), the test performed by the potential buyer is still considered an interested party since they were interested at the time the production was delivered.

I Sample Size and Transportation of Samples

(1) Sample size to be submitted for testing will be dictated by the approved testing facility. (For Aflatoxin, most facilities will likely require at least a ten-pound sample).

(2) Follow the approved testing facilities recommendations for storage and transportation, including required container composition, provisions for maintaining proper temperatures of the sample, any special requirements for high-moisture production, and any other specific information pertaining to handling and transporting the sample to ensure and maintain the integrity of the sample.

(3) Samples submitted for testing by the insured (or insured's authorized representative) cannot be used for quality adjustment. Also, adjusters shall not pull samples and then allow the insured (or insured's authorized representative) to maintain the samples until the adjuster can pick them at a later time to submit to an approved laboratory for testing. Only the adjuster or a person who is a disinterested third party approved by the AIP can maintain and submit the samples for testing. AIPs are responsible for seeing that SAMPLES ARE:

(a) Mailed or transported to the approved testing facility **WITHIN 4 days** of the time the sample(s) were taken OR within the timeframe specified by the approved testing facility (if less than 4 days), and

(b) Stored in a breathable container (container composition type specified by the approved testing facility) in a cool, climate controlled place (at the temperatures recommended by the approved testing facility for the particular substance or condition) until shipping.

J Harvested Production Delivered to Elevator or other Facility

If the insured harvests and delivers production to an elevator, processor, or other facility, any mycotoxin (or other substance or condition) testing done by the elevator, processor, or other facility cannot be accepted for insurance purposes unless the elevator, processor, or other facility has a testing facility that meets the criteria for an approved testing facility for testing mycotoxins (or other conditions or substances that are injurious to animal or human health).

(1) Who Pulls Samples:

(a) If the elevator (or other facility) to which the insured delivers production does not meet the criteria for an approved testing facility (refer to subparagraph H above), the adjuster (using the criteria in (2) below) must obtain the samples for testing prior to the production being transported to the elevator, processor, or other facility; or

(b) If the AIP agrees, the elevator, processor, or other facility can be advised to extract an additional sample per load **(samples per load can be blended into one sample per unit)** that can be sent to an approved testing facility in order for the damage from the mycotoxin (or other condition or substance) to be considered for quality adjustment purposes. However, before the AIP agrees to use the sample pulled by the elevator, processor, or other facility,
*** the AIP/adjuster must assure that the elevator, processor, or other facility is following the criteria below.

(2) Samples

(a) For sample size, see subparagraph I (1) above.)

(b) The sample must be tagged in a way that will identify the insured's name, load number and unit from which the sample was obtained, and any other pertinent information.

(c) The requirements in subparagraphs I (2) and (3) above for maintaining and transporting the sample are applicable.

(d) When the elevator, processor, or other facility is willing to pull the samples and the AIP agrees to use the samples pulled by the elevator for quality adjustment:

1 The AIP can agree to allow the elevator to submit the samples directly to an approved testing facility. When the elevator receives the test results for the insured's samples and notifies the insured, the insured must notify the AIP that the test results have been received.

2 If the elevator is NOT going to submit samples to approved testing facilities, the adjuster or other authorized AIP representative must pick the samples up from the elevator in time to mail or transport the sample to the approved testing facility within 4 days of the time the elevator obtained the sample**. NO ONE OTHER THAN THE ADJUSTER OR OTHER AIP-AUTHORIZED REPRESENTATIVE IS ALLOWED TO PICK THE SAMPLE UP FROM THE ELEVATOR AND MAINTAIN THE SAMPLE UNTIL IT CAN BE MAILED OR TRANSPORTED TO THE APPROVED TESTING FACILITY.**

(3) If the elevator has a testing facility that meets the criteria for an approved testing facility for the mycotoxin (or other substance or condition), and there is a test result for each load, use the test results of each load to determine the RIV for quality adjustment (value of damaged grain for crops that use value of damaged production instead of RIVs for quality adjustment purposes).

(4) Loads having the same quality adjustment factors can be combined and entered on one line on the claim form as stated in the crop handbooks.

K Discrepancy Between Test Results

AIPs shall only use test results from approved testing facilities to determine if the production is eligible for quality adjustment under Section C. When there is a discrepancy between the test result of a sample from an approved lab used by the AIP and the one used by the disinterested third party buyer or commercial storage facility:

(1) **For crops having QA provisions in the SPOIs (not applicable to Malting Barley – refer to applicable Malting Barley Price and Quality Endorsement:**

(a) **For sold production** for which RIVs are applicable, the test results of the approved lab used by the disinterested third party who bought the production will be used, unless there is substantial reason to believe that the samples taken by the buyer were not done in accordance with approved industry standards for obtaining samples for the particular substance or condition. If the samples taken by the buyer were not done in accordance with approved industry standards, the AIP test result will be used.

(b) **For unharvested production or for farm-stored production** containing mycotoxins other than Vomitoxin **(e.g., Aflatoxin),** the only test results used will be those from samples obtained by the adjuster prior to entering storage and submitted to the approved lab.

(c) **For unharvested production or for farm-stored production containing Vomitoxin only:**

1 **(For Group 1 QA Statements)** the only test results used will be those submitted to the approved lab by the adjuster.

2 **(For Group 2 QA Statements)** if there is a discrepancy between the test results of the sample taken on the farm by the adjuster and the test results from a commercial facility where the production has been delivered and sold or stored, the test results from the buyer or commercial storage facility test will be used.

(2) **For crops using Actual Value to Determine QA (QA provisions only in the Policy Provisions – does not apply to Malting Barley – refer to Malting Barley Price and Quality Endorsement):**

(a) **For harvested SOLD production**, the test results of the approved lab used by the buyer will be used if the production is sold at the time of final settlement of the claim.

(b) **For unharvested production or farm-stored production,** only the test results from samples obtained by the adjuster and sent to the approved lab will be used.

L Documentation of Mycotoxins or Other Substances or Conditions Injurious to Animal or Human Health

Document in the narrative of the claim form or on a Special Report, the following:

(1) Test name and type of condition or substance (e.g., mycotoxins) for which the production is being tested,

(2) Test type - qualitative or quantitative,

(3) Name and location of testing facility,

(4) Type of testing facility,

(5) Test date, and

(6) Type and level of mycotoxin or other substances or conditions established from the test.

M Potential Markets for Infected Production

Since various mycotoxins affect animal species differently, document by name which potential markets were contacted in establishing a fair grain market price. Take into account use for feed for tolerant animal species, value for blending with other grain (when allowed), and commercial (alcohol fuel plant or other product) uses. Likewise, document and take these same things into account for other substance or conditions that FDA or other State or Federal Health Agency has identified. Take steps to safeguard against any vulnerability involving claims of insureds who are directly involved in the buying or testing of damaged production.

N Verification of ZMV Production

(1) **For crops having QA provisions in the SPOIs:**

(a) **If production is eligible for QA provisions in the SPOI, and:**

The insured is claiming that his/her production has no value, the AIP, using the steps in PAR. 96 J, must determine if there are buyers in the insured's local marketing area and a distant market (if there are **no** buyers in the insured's local marketing area) with a value greater than ZMV[1] buying grain of the same types/levels of damage before the AIP can authorize the insured to destroy the production in a manner acceptable to the AIP and settle the claim on zero production to count. Refer to additional procedures in PAR. 96 J regarding steps for making final inspection determinations of ZMV.

(b) **If production is eligible for QA under (For Group 1 QA Statements -** Section C4 of the SPOIs. **For Group 2 QA Statements** – Section C3 of the SPOIs) **the QA section in the SPOI that exceeds the maximum levels of mycotoxins allowed:**

The AIP does not need to determine whether the production has ZMV[1] before the AIP:

1 Authorizes the insured to destroy the production,

2 Verifies destruction was done in a manner acceptable to the AIP, and

3 Settles the claim based on zero production to count.

(2) **For crops not having QA provisions in the SPOIs**, refer to the procedures in PAR. 96 J.

O Settlement of Claims for Crops Having QA Provisions in Section C of the SPOIs (Not applicable to Malting Barley – See Malting Barley Price and Quality Endorsement)

(1) General Information

(a) The QAF is 1.000 minus the sum of the applicable DFs, expressed as three-place decimals. The production to count remaining after any reduction due to excessive moisture (in accordance with the applicable crop provisions) is multiplied by the QAF (not less than zero) to determine net production to count.

(b) Zero Market Value (Section D of the SPOIs)

When no buyers in the insured's local area are willing to purchase the production AND AFTER fair consideration[2] to deliver production to a market outside the insured's local marketing area ZMV[1] occurs AND the insured:

1 Destroys the production in a manner acceptable to the AIP, the DF will be 1.000 for such production, resulting in zero production to count. The method of destruction must result in the production having no

possibility of being marketed or possibility of any salvage use that could result in any type of compensation to the insured. Refer to PAR. 96 J (2) (b) for exceptions to the requirement to destroy the ZMV crop. In lieu of destruction of ZMV[1] production, the ZMV production may be gleaned provided the criteria stated in PAR. 94 are met.

2 Does not destroy the production in a manner acceptable to the AIP, makes no attempt to destroy the production, or refuses to destroy the production, such production cannot be quality adjusted for any deficiencies listed in Section C of the SPOIs. However, if such production also qualifies for DF's under Section A or B2 of the SPOIs, such production will be quality adjusted with ONLY those DFs.

(c) In accordance with the General Statements of the QA Statement(s) in the SPOIs, fair consideration is allowed for sold production that falls (**For Group 1 QA Statements** - Section C1a, C2a, C4a, and C4b of the SPOIs. **For Group 2 QA Statements** - Section C1a, C2a, C3a, and C3b of the SPOIs) but it is not allowed for production fed or used in a manner other than feed.

(2) **QA will be allowed for substances or conditions injurious to human or animal health WHEN levels of substances or conditions are IN EXCESS OF THE LOWER OF the following amount allowed by:**

(a) FDA's action or advisory level for the crop;

(b) Another public health organization of the United States; or

(c) A public health agency of the applicable State in which the insured crop is grown.

(3) QA for Sold Production containing:

(a) Vomitoxin that has been sold prior to 60 days after the calendar date for the EOIP, the DF will be the **RIV** applied by a disinterested third party buyer (as verified by the AIP) due to all insurable QA deficiencies described in the SPOIs divided by the local market price in effect on the date the production was sold. **Because the RIV is for all insurable QA factors, do not add additional DFs from Sections A or B of the SPOI.**

(b) Mycotoxins (other than Vomitoxin),that has been sold prior to 60 days after the calendar date for the end of the insurance period and was **transported directly from the field to the buyer or transported directly from the field and put into commercial storage without going into farm-storage**, the DF will be the RIV applied by a disinterested third party buyer (as verified by the AIP) due to all insurable QA deficiencies described in the SPOIs divided by the local market price in effect on the date the production was sold. **Because the RIV is for all insurable QA factors, do not add additional DFs from Sections A or B of the SPOI.**

*** If the level of Aflatoxin or Vomitoxin is at the level shown in (4) (f) below, the 60 day time limit does not apply. **The claim cannot be completed** until

such production is sold and the RIV applied by the buyer is known. The claim will be completed in accordance with the (**For Group 1 QA Statements** - Section C4 of the SPOIs. **For Group 2 QA Statements** – – Section C3 of the SPOIs) SPOIs.

(c) RIVs applied by the buyer may be increased for:

1 Cost of conditioning the production when the RIV that would have been applied by the buyer is reduced for conditioning, provided the resulting RIV does not exceed the original RIV plus the conditioning costs.

2 Fair consideration to deliver sold[1] production qualifying under (**For Group 1 QA Statements** - Section C1a, C2a, C4a, and C4b – **For Group 2 QA Statements** - Section C1a, C2a, C3a, and C3b) of the SPOIs to the buyer outside the insured's local marketing area (distant market) if a lower RIV is available at the distant market, PROVIDED the resulting RIV does not exceed the RIV in the insured's local marketing area and the amount of the fair consideration[2] is usual, reasonable, and customary.

(4) For **Group 1 QA Statements** - Production qualifying under Section C for which Pre-established DFs in Sections C1b, C2b, C2c, C3a, and C3b are used:

(a) For production containing Vomitoxin only that is unsold (unharvested, in on-farm or commercial storage, fed, utilized in any other manner, or sold to other than a disinterested third party prior to 60 days after the calendar date for the EOIP, the DFs are described in the SPOIs (in addition to any applicable DFs from Section A or B2 of the SPOIs).

(b) For production containing Aflatoxin that is unsold (unharvested, in on-farm or commercial storage, fed, used in any manner other than feed, or sold to other than a disinterested third party) prior to 60 days after the calendar date for the EOIP that was not transported directly from the field to the buyer, or not transported directly from the field and put into commercial storage and later sold, the DFs are described in the SPOIs (in addition to any applicable DFs from Section A or B2 of the SPOIs).

*** (c) The applicable DFs in Section C1b and C2b of the SPOIs are used for the following levels of Aflatoxin and Vomitoxin.

Aflatoxin having levels of 20.1-300 ppb, or
Vomitoxin having levels from 5.1-10.0 ppm (2.1-10.0 ppm for Wheat),

***

When the level for the specific mycotoxin exceeds the maximum level shown above, use the DF shown in (f) below.

*** (d) A DF of .500 will be used for all substances or conditions other than Aflatoxin or Vomitoxin that are injurious to human and animal health (Section C2c of the SPOIs).

(e) For production remaining unsold 60 days after the calendar date for the EOIP, the applicable DF will be as follows:

1 The applicable DF for the level of Aflatoxin or Vomitoxin listed in
*** Section C1b and C2b.

*** 2 A DF of .500 for all substances or conditions other than Aflatoxin or Vomitoxin that are injurious to human and animal health (Section C3b of the SPOIs).

(f) For production that has Aflatoxin in excess of 300 ppb, Vomitoxin in excess of 10 ppm, or any other substance or condition that exceeds the maximum amount allowed, **a claim cannot be completed until such production (including unharvested production) is sold, fed, used, or destroyed.** The DFs are as follows:

1 A DF of 1.000 for production destroyed in a manner acceptable to the AIP.

2 A DF of .500 for production containing:

a Aflatoxin or any other substance or condition, that was in on-farm storage and later sold, fed, utilized in any other manner, or sold to other than a disinterested third party; or

b Vomitoxin only, that was fed, utilized in any other manner or sold to other than a disinterested third party.

3 The DF for sold production containing Vomitoxin only is determined from the RIV due to all insurable QA deficiencies described in the SPOIs applied by the buyer (a disinterested third party as verified by the AIP).

4 The DF for sold production containing Aflatoxin or any other substance or condition is determined from the RIV due to all insurable QA deficiencies described in the SPOIs applied by the buyer (a disinterested third party as verified by the AIP) for production transported directly from the field to the buyer or transported directly from the field and put into commercial storage and later sold without going into on-farm storage.

No other quality factors contained in Sections A or B of the SPOIs will be considered.

(5) **For Group 2 QA Statements** - Production Qualifying for QA Under Section C for which Pre-established DFs in Section C1b, C2b, C2c, and C2d of the SPOIs, (the DFs are described in the SPOIs in addition to any applicable DFs from Section A or B2 of the SPOIs), are used for production containing:

(a) Vomitoxin only that is unsold or sold to other than a disinterested third party.

(b) Aflatoxin that is unsold and that is in commercial storage (transported directly from the field and put into commercial storage, without going into on-farm storage).

(c) Aflatoxin that is unharvested, stored on-farm, fed, used in manner other than feed, sold to other than a disinterested third party or put in on-farm storage and then transported to commercial storage that is not sold prior to 60 days after the calendar date for the EOIP.

(d) The applicable DFs in Section C1b, C2b, and C2c of the SPOIs are used for the following levels for:

Aflatoxin having levels of 20.1-300 ppb or
Vomitoxin having levels from 5.1-10.0 ppm (2.1-10.0 ppm for Wheat).

When the level for the specific mycotoxin exceeds the maximum level shown above, use the DF shown in (f) below.

(e) Substances or conditions other than Aflatoxin or Vomitoxin that are injurious to human and animal health (Section C2d of the SPOIs), use a .DF of 500.

(f) For production that has Aflatoxin levels in excess of 300 ppb, Vomitoxin levels in excess of 10 ppm, or any other substance or condition that exceeds the maximum amount allowed**, a claim cannot be completed (will be held open) until such production (including unharvested production) is sold, fed, used, or destroyed**. The DFs are as follows:

1 1.000 for production destroyed in a manner acceptable to the AIP.

2 .500 for production containing:

a Aflatoxin or any other substance or condition (except for Vomitoxin), that was in on-farm storage, fed, utilized in any other manner, put in on-farm storage and then transported to commercial storage and sold, or sold to other than a disinterested third party; or

b Vomitoxin only, that was fed, utilized in any other manner or sold to other than a disinterested third party.

3 For sold production containing Vomitoxin, determine the DF from the RIV applied by the buyer (a disinterested third party as verified by the AIP).

4 For sold production containing Aflatoxin or any other substance or condition, determine the DF from the RIV applied by the buyer (a disinterested third party as verified by the AIP) for production transported directly from the field to the buyer or transported directly from the field and put into commercial storage and later sold without going into on-farm storage.

No other quality factors contained in Sections A or B of the SPOIs will be considered.

(6) For production qualifying under subparagraphs (4) and (5) above, an automatic extension of time will be allowed for the insured to submit their claim for indemnity, not to exceed 90 days after the calendar date for the end of the insurance period. This does not limit the insured's ability to request an additional

extension of time to submit a claim for indemnity in accordance with section 14 of the Basic Provisions. For production that contains mycotoxins or any other substance or condition that exceeds the maximum amount allowed, the claim cannot be completed (will be held open) until it is sold, fed, used, or destroyed. See PAR. 69 for additional information.

(7) Following is a table of FDA-issued recommended, advisory, or action levels for the most common mycotoxins found in production and the section in the SPOIs for the level of mycotoxin. The advisory and action levels used in this table are current as of the issuance of this handbook. Always verify what the current FDA action or advisory levels are. These action levels are subject to change.

Category	**FDA Recommended, Advisory, or Action Levels**	**Aflatoxin (FDA Action Levels)**	**Fumonisin (FDA Recommended Levels)**	**Vomitoxin (FDA Advisory Levels)**
Category 1 (No QA)	**No** FDA recommended, advisory, or action levels for this category; i.e., it is safe for humans and animals.	0.0 ppb - 20.0 ppb	0.0 ppm – 3.0 ppm	0.0 ppm – 2.0 ppm (Wheat only)
Category 2 (QA applied, but no FDA recommended advisory or action level)	**No** FDA recommended advisory, or action levels.			2.1 ppm – 5.0 ppm (Wheat only)
Category 3 (Injurious to human and some animal health.)	FDA-recommended, advisory, or action levels for this category	20.1 ppb – 300.0 ppb	3.1 ppm – 100.0 ppm	5.1 ppm – 10.0 ppm (For Wheat and all other crops)
	Exceeds maximum FDA-recommended, advisory, or action level	300.1 ppb and above	100.1 ppm and above	10.1 ppm and above

(8) **EXAMPLES for claims containing substances or conditions under Section C of the SPOIs**

EXAMPLE 1: Combination of type/level of damage with pre-established DF and type/level of mycotoxin (Aflatoxin) damage and disposition of the damaged production for which a RIV can be used

The corn was sold (without going into farm-storage) to a disinterested third party prior to 60 days after the calendar date for the EOIP. Corn had a low-test weight of 46 pounds and had Aflatoxin damage of 150 ppb. It was determined that there was a 65 cents per bushel RIV for Aflatoxin and a 16 cents per bushel RIV for low test weight. There is a DF of .062 for 46-pound test weight listed in Section A of the corn SPOIs and there is a .300 DF for 150 ppb Aflatoxin listed in the corn SPOIs. However, because the Aflatoxin damaged production was sold[1] (without going into farm-storage), the pre-established DFs in Section A and C of the corn SPOIs will be ignored. In this example, the RIV for the low-test weight and the RIV for the Aflatoxin applied by the buyer will be used to establish a DF for each of these types of damage.

The LMP for corn is $2.20. The QAF for the damaged corn is determined as shown in the following three steps:

(a) .65 (RIV for mycotoxin)
+.16 (RIV for test weight)
$ .81 Total RIV

(b) .81 (Total RIV) ÷ 2.20 (LMP) = .368 (DF) (c) 1.000 - .368 = .632 QAF

EXAMPLE 2: Same scenario as Example 1 above except the Aflatoxin level in the corn is 450 ppb. If the production was transported directly from the field to the buyer or put into commercial storage and later sold[1], the DF will be determined from the RIV applied by the buyer.

EXAMPLE 3: Same scenario as Example 1 above except the Aflatoxin level in the corn is 450 ppb and the insured opts to destroy the production. The AIP verifies the production is destroyed in a manner acceptable to the AIP. Since the Aflatoxin level exceeds the FDA maximum of 300 ppb for Aflatoxin and the insured opted to destroy the production, the pre-established DF will be 1.000. The resulting QAF will adjust the damaged production to zero production to count.

(a) DF is 1.000 (b) 1.000 — 1.000 = .000 QAF

EXAMPLE 4: Same scenario as Example 1 above, except the Aflatoxin level is 450 ppb and the insured farm-stored the production and then sold[1] it. The buyer applied a total RIV of $1.75 for the 450 ppb of Aflatoxin and 46 pound test weight.

In this case, because the Aflatoxin level exceeds 300 ppb, the pre-established .500 DF listed in the SPOI applies. No other quality factors contained in Sections A or B of the SPOIs will apply.

EXAMPLE 5: Same scenario as Example 1 except the production was farm-stored and the AIP determines the production has ZMV. The insured does not destroy production in a manner acceptable to the AIP. The only DF that can be applied is the .062 DF for the 46 pound test weight. The DF for the 150 ppb Aflatoxin cannot be applied. This is because Section D4 of the SPOI indicates that if production having ZMV[1] has a quality deficiency listed in Section C is not destroyed in a manner acceptable to the AIP or the insured makes no attempt (or refuses) to destroy the production, such production will not be adjusted for any quality deficiencies listed in Section C.

EXAMPLE 6: Same scenario as Example 5 except the production is farm-stored and the production is **not** ZMV. The .062 DF for 46 pounds test weight listed in Section A of the SPOIs and the .300 DF for 150 ppb Aflatoxin listed in Section C are added together (.062 +.300) for a total DF of .362 and a resulting QAF of .638.

EXAMPLE 7:

For Vomitoxin (DON), there are no advisory levels for human consumption for raw grain, just finished production. FDA states the reason there are no advisory levels for Vomitoxin in raw grains destined for human consumption is because most of the Vomitoxin is removed during the milling process. The maximum level FDA lists for any animal use is 5 ppm (for swine and most animals); however, for some animals it is less. Therefore, the FDA advisory level is 5 ppm.

However, for Wheat ONLY, QA is allowed when the approved lab results show Vomitoxin in excess of 2.0 ppm. When production is unsold, the Wheat SPOIs contain pre-established DFs for Vomitoxin from 2.1 to 10.0 ppm. Refer to Malting Barley Price and Quality Endorse for malting barley. For all other crops, Vomitoxin must be in excess of 5.0 ppm before QA applies.

Example 7 A

The following example is for UNSOLD wheat in excess of 2.0 ppm of DON but not greater than 10.0 ppm (applicable to Section C of the SPOI plus any applicable DFs from Section A or B2 of the SPOI).

SITUATION 1	**IF** Elevator Discounts:	**THEN** DF is:	**IF** Elevator Discounts	**THEN** DF is:
54 # of Hard Red Spring Wheat	$.30	------	$0.30	-------
8% damage	$0.50	------	$0.90	-------
3.1ppm DON	$0.40	.310	No Discount	.310
TOTAL DF		.310		.310

Test weight or kernel damage has not reached a level for which quality would apply for the wheat as described in the Small Grains Crop Provisions. No DF for test weight or damage is shown in Section A of the SPOIs, even though the elevator has applied a discount.

Example 7 B

The following example is for wheat in excess of 2.0 ppm of DON but not greater than10.0 ppm. The wheat was ***sold to a disinterested 3rd party, prior to 60 days after calendar date for EOIP (applicable to Section C1 of the SPOI.)

SITUATION 2	**IF** Elevator Discounts:	**THEN** RIV is:	**IF** Elevator Discounts	**THEN** RIV is:
54 # of Hard Red Spring Wheat	$0.10	-----	$0.10	-----
11% Damage	$0.50	$0.50	$0.50	$0.50
5.1 ppm DON	$0.40	$0.40	No Discount	-------
TOTAL RIV		$0.90		$0.50

5.1 ppm of DON and 11% damage (grades U.S. # 5) both qualify the grain for quality. Even though there are DFs. RIVs are used for ALL insurable deficiencies to determine the applicable DFs because the grain is sold and does not exceed 10.0 DON. However, if the 11% damage is the only damage that the buyers discounts, as in the example on the right-hand side, then there is no adjustment for the DON damage.

Example 7 C

The following example is for SOLD wheat in excess of 2.0 ppm of DON but not greater than 10.0 ppm. The wheat * was sold to a disinterested 3rd party, prior to 60 days after calendar date for EOIP (applicable to Section C1 of the SPOI.**

SITUATION 3	**IF** Elevator Discounts:	**THEN** RIV is:	**IF** Elevator Discounts	**THEN** RIV is:
52# of Hard Red Spring Wheat	$0.40	$0.40	$0.40	$0.40
18% Damage	$0.60	$0.60	$0.80	$0.80
5.1 ppm DON	$0.50	$0.50	No Discount	------
TOTAL RIV		$1.50		$1.20

The 52 # test weight, 18% damage (causes grain to grade # 5) and 5.1 ppm DON all qualify the grain for quality. However, if the 52# test weight and 18% damage are the only types of damage that the buyer discounts, as in the example on the right-hand side, then there is no adjustment for the DON damage. RIVs applicable for same reasons as in Example 7 B above.

EXAMPLE 8: The insured commingles 3 units of farm-stored corn having Aflatoxin but no other quality deficiencies. The insured has acceptable weight records for each of the 3 units. The total production in the storage structure is in within 3% of the total weight records for the 3 units. (Refer to PAR. 104 for weighed and farm-stored production procedures.) The quality adjustment is handled as illustrated in this example:

1. First determine what section of the quality adjustment section of the SPOI the corn qualifies under.

   Unit 00100 3,000 bushels of corn with 10 ppb Aflatoxin

   With this amount of Aflatoxin, this corn does not qualify for quality adjustment.

   Unit 00200 5,000 bushels of corn with 500 ppb Aflatoxin

   With this amount of Aflatoxin and other quality deficiencies, this corn falls under section (**For Group 1 QA Statements** – C2b. **For Group 2 QA Statements** – C2c) of the quality adjustment section of the SPOIs.

   Unit 00300 7,000 bushels of corn with 50 ppb Aflatoxin

   With this amount of Aflatoxin and other quality deficiencies, this corn falls under (**For Group 1 QA Statements** – C2b. **For Group 2 QA Statements** – C2c) of the SPOIs.

2. The claims cannot be settled until **ALL** production is sold, used, destroyed, or fed since **SOME** of the production falls under Section **For Group 1 QA Statements** – C4. **For Group 2 QA Statements** – C3) of the SPOIs.

3. **The insured sells all of the grain prior to 60 days after the calendar date for the EOIP.**

4. Determining quality for Unit 00100

Since unit 00100 does not qualify for quality adjustment due to Aflatoxin, no quality will be allowed for this deficiency.

5. Determining quality for Units 00200 and 00300

   Unit 00200 will be adjusted using a DF of .500 since the production exceeds the 300 ppb of Aflatoxin and was in on farm-storage.

   Unit 00300 – the 7,000 bushels will be adjusted using the pre-established DF of .100 for 50 ppb of Aflatoxin listed in chart table in (**For Group 1 QA Statements** – C2b. **For Group 2 QA Statements**– C2c) the SPOIs.

P Settlement of Claims for Crops Having QA provisions in the Crop Provisions:

This does not apply to barley, corn, canola, flax, grain sorghum, oats, rye, safflowers, soybeans, sunflowers, and wheat. Check the crop provisions for applicable crops.

(1) The QAF is determined by dividing the Local Market Value (actual dollar and cents value (or salvage value for some crops)) of the damaged production by the Local Market Price (Base Contract Price for some crops) as defined in the specific crop provisions or as otherwise specified in the crop provisions; e.g., price election.

(a) The actual dollar and cents value for the damaged production also includes the reduced value for other damage qualifying for quality adjustment (e.g., kernel damage, low-test weight, etc.) but shall not reflect a reduction due to uninsured causes or drying charges. The actual value of the damaged production is the amount:

1 Applied by the buyer for sold production (see exception in subparagraph J); or

2 As determined by the AIP for unsold production:

If the insured chooses NOT to harvest the field(s) or subfield(s) after the mycotoxin (or other condition or substance) test results are received, quality adjustment of such damage will be determined from the actual value of the damaged production based on each sample for the unit (field or subfield, if a mycotoxin (or other condition or substance) sample was taken for each field or subfield). This actual value will be based on the mycotoxin (or other condition or substance) test results and any other type/level of insurable damage qualifying for quality adjustment of production that affected the value of the production. No other dollar and cent discounts are allowed in the value of the damaged production as stated in PAR. 96 I (3) (f) and (4). Also, refer to PAR. 96 for more quality adjustment information.

(b) The QAF is rounded to three (3) decimal places. The production to count remaining after any reduction due to excessive moisture (in accordance with the applicable crop provisions) is multiplied by the QAF (not less than zero) to determine net production to count.

(c) Refer to PAR. 96 I for information regarding damage other than mycotoxin or substances injurious to human and animal health.

(2) Follow the procedures in PAR. 96 J when there is no dollar-and-cents value (ZMV) for the damaged production in the Local Market Place and fair consideration to deliver such production to a distant market is applicable.

(3) Refer to PAR. 96 I for additional procedures regarding

(a) Determination of the actual dollar-and cents value of the damaged production when production is unsold, fed, sold or otherwise disposed

of, or when the production is under a speculative-type contract, not a processing contract.

(b) Reducing the dollar and cents value of the damaged production when a higher value for the production can be obtained due to:

1 Conditioning costs of the damaged production, or

2 Transportation costs.

(4) NO claim for indemnity is to be finalized until you are satisfied with all determinations as stated in PAR. 67 H.

(5) Following is a table for crops having QA provisions in the crop provisions. The table contains FDA-issued recommended, advisory, or action levels for the most common mycotoxins found in production.

Category	FDA Recommend, Advisory, or Action Levels	Aflatoxin (FDA Action Levels)	Fumonisin FDA Recommended Levels	Vomitoxin (FDA Advisory Levels)
Category 1 (No Quality Adjustment)	No FDA-recommended, advisory, or action levels for this category; i.e., it is safe for humans and animals	0.0 ppb - 20.0 ppb	0.0 ppm –3.0 ppm	0.0 ppm – 5.0 ppm
Category 2 (Qualifies for quality adjustment)	FDA-recommended, advisory or action levels for this category – safe for some types of animals.	20.1 ppb – 300.0 ppb	3.1 ppm – 100.0 ppm	5.1 ppm-10.0
Category 3	Exceeds maximum FDA-recommended, advisory, or action levels	300.1 ppb and up	100.1 ppm and up	10.1 and up

(6) If any Federal or State agency requires destruction of any insured crop or crop production, as applicable, because it contains levels of a substance, or has a condition that is injurious to human or animal health in excess of the maximum amounts allowed by the Food and Drug Administration, other public health organizations of the United States or an agency of the applicable State, the insured must destroy the insured crop or crop production in a manner acceptable to the AIP and zero production will be counted. Refer to PAR. 96 J (2) for a definition of Acceptable Destruction Methods and other information about destruction and verification of destruction.

SECTION 6 RECORDING AND DETERMINING THE QUANTITY OF FARM-STORED PRODUCTION

103 DETERMINING AND RECORDING FARM-STORED PRODUCTION THAT REQUIRES MEASUREMENTS

A Accurate Measurements

Accurately measure storage structure(s). If possible, the measurements must be INSIDE measurements. If inside measurements are not possible, the measurements must reflect the wall-thickness of the structure. The circumference range on the Round Bin Conversion Chart (Exhibit 14) reflects the wall-thickness of a steel bin.

B Recording Measurements. Record measurements in feet to tenths.

Inches are converted to tenths of a FOOT as follows:

INCHES	TENTHS		INCHES	TENTHS
1	.1		7	.6
2	.2		8	.7
3	.3		9	.8
4	.3		10	.8
5	.4		11	.9
6	.5		12	1.0

C Claim Form Entries. Entries on the claim form must be legible and printed in ink.

D Deductions for Obstructions. All obstructions must be found and deducted from the volume of the grain or silage.

E Insured/Adjuster Cooperation. Cooperate with the insured while working in and around his/her property.

F Caution

DO NOT ENTER storage structures:

(1) That are air tight (the result could be FATAL).

(2) Without someone there to assist.

(3) If the stored production has been treated with any chemicals and the re-entry time has not elapsed.

G Stirring Device

If a stirring device is being used in stored grain, advise the insured that accurate measurements cannot be made unless stirring is stopped at least 4 to 6 days prior to the inspection.

H Accounting for all Farm-stored Production

(1) Working with the insured, ensure that all storage structures containing production for the units being inspected have been accounted for and measured. AIPs must include storage-structure location charts and measurement calculations for all farm-stored measured and calculated production in the insured's claim folder. DO NOT finalize the claim until the insured has confirmed that all structures have been accounted for and that production for ALL entities sharing in the crop(s) has been included (for all units being inspected). Refer to PAR. 83 for information about establishing total production for the crop.

(2) **Current FSA measurements of storage structures, depth of production for each unit, crop year, etc., in each structure are acceptable if all the criteria shown in PAR. 70 have been met.**

104 PRODUCTION WEIGHED AND FARM-STORED

A Insured's Weighed Production for the Current Crop Year

Adjusters must measure and calculate all farm-stored production for the unit and current crop year unless as discussed in subparagraph F below, production to count is determined from pre-harvest appraisals as required or permitted. If the insured provides acceptable weight records for the current crop year adjusters may:

(1) Use the insured's weighed production[1/] for the current crop year PROVIDED the:

(a) Insured's weighed production[1/] is within 3% of the adjuster-measured and calculated production, (adjusted for any excess moisture and pack factor (if applicable).

[1/] Convert the weight (refer to F below) to the applicable unit of measure, if needed, and adjusted for any excess moisture based on the insured's recorded moisture determination for EACH load at the time production was weighed. Refer to crop provisions for what is considered excess moisture. **Any conveyance load for which there is not excess moisture or the insured has no records of moisture determinations for the conveyance load cannot be adjusted for excess moisture.**

(b) Insured has met the criteria for acceptable scale types, as stated in B below and provides the verifiable location of the scales used to weigh the production;

(c) Insured has met the criteria for acceptable weight tickets/records as stated in C below);

(2) If the insured's weighed production (adjusted as stated in (1) (c) footnote) for the current crop year is NOT within 3% of the adjuster-measured production and calculated production (with adjustments for moisture (if applicable) and pack factor (if applicable), the AIP will use the GREATER of the:

(a) Insured's weighed and adjusted production (as stated above) for the current crop year, OR

(b) Adjuster-measured and calculated production (adjusted as stated above) for the current crop year.

(3) Prorating production when there are multiple units in the storage structure

When the insured's weighed production is NOT within 3% of the adjuster measured and calculated production:

(a) If the insured's weighed production (adjusted as stated in (1) (a) footnote above) for these units is greater than the adjuster's measured and calculated production, no proration is needed.

(b) If the adjuster's measured and calculated production (adjusted as stated in (2) above) is greater than the insured's weighed production (adjusted as stated in (1) (a) footnote above), then the adjuster measured and calculated production must be prorated to each unit, as follows:

Step 1: Total the weight tickets, per unit.

For example, the storage structure contained corn from units 00101, 00102, and 00103. Based on the total weights for each of these units, the production for each of these units were follows: unit 00101 =3,019.5 bu., 00102 = 5,685.4 bu., and unit 00103 = 2789.3 bu.

Step 2: Sum the totals for all units in the storage structure.

For example, assume the total weight records for each were as follows:

Unit 00101 = 3,019.5 bu.
Unit 00102 = 5,685.4 bu.
Unit 00103 = 2789.3 bu.
Total = 11,494.2 bu.

Step 3: Percentage of Each Unit Based on Total Weight of all Units (rounded to whole percent)

For example, using the same figures in Step 2:

3019.5 ÷ 11494.2 bu. = 26%
5685.4 ÷ 11494.2 bu. = 49%
2789.3 ÷ 11494.2 bu. = 25% (This percentage rounded to equal 100%)

Step 4: Total Measured and Calculated Production
For example, assume the adjuster measured and calculated production in the storage structure as: 12,564.7 bu.

Step 5: Proration of production to each unit

For example, using the figures from Steps 2, 3, and 4, the per-unit percentage of the total weighed production for all units in the structure is:

12,564.7 X 26% = 3,292.0 bu. unit 00101 production to count
12,564.7 X 49% = 6,207.0 bu. unit 00102 production to count
12,564.7 X 24% = 3,166.3 bu. unit 00103 production to count

(4) If either or both of the insured's scale or weight tickets/records are unacceptable, the insured's records of weighed production cannot be used. The adjuster measured and calculated production will be used and the procedures for commingled production apply.

(5) **Insured's weight tickets/records for previous year's production CANNOT be used to separate prior year's production from current year's production stored in the same storage structure,** UNLESS the AIP or another USDA agency measures the prior year's production just prior to current year's production being added (a copy of the other USDA agency's measurements must be kept in the loss file). Also, refer to PAR. 93 C (2).

B Acceptable Scale Types

***

Acceptable scale types are, as follows**:**

(1) Non-portable farm scales,

(2) Commercial elevator scales, or

(3) Grain carts, provided the grain cart:

(a) Can produce printed tickets showing the weight, or

(b) Has an integrated display panel to show the weight of the production in the cart, provided the cart is available so the capacity of the cart can be determined.

C Acceptable Scale Weight Tickets/Records

(1) General Information

(a) To inform the insured prior to harvest of what is needed to have acceptable scale weight tickets/records for loss adjustment purposes, the AIP must **annually** provide the following information (in writing) to the insured:

(b) A summary record of scale weight tickets/records is not acceptable.

(c) The insured must hand-write any of the required information listed in (2) below if the scale that is being used is not capable of printing the required information.

(2) **To be acceptable, each individual scale weight ticket/record for each load must be available and must provide at least the following information:**

***

(a) Insured's name;

(b) Crop;

(c) Per load, the **gross weight of the conveyance with production and** the gross weight of the conveyance **without production, except as stated in 1 below;**

1 If the production is weighed using a grain cart that prints out tickets showing the gross weight of production in the cart or has an integrated panel showing the gross weight of the production in the cart from which the insured documents the weight, **only the gross weight**, per grain cart, of the production is required.

2 Scale Weight tickets/records from grain carts should be photo copied since the print can disappear with time.

(d) Date weighed;

***

(e) Load Number (if the scale used does not print a number, the insured must apply a number);

(f) Identification and location of farm-storage structure in which the load(s) from each field are stored and/or satisfactory explanation of disposition of the production if any or all of the production is no longer stored at the time of inspection; and

(g) Unit and/or field identification from which the production was harvested that can be correlated to the unit numbers for the crop stored. To be acceptable, the adjuster must verify that the field identification can be correlated with the unit numbers for the crop for the current crop year. If a field identification cannot be correlated to a unit number for the crop, the production must be considered commingled, and the procedures in PAR. 126 apply

D Converting Scale Weights to Unit of Measure Used for the Crop

To convert scale weight to units of measure, divide the weight by the standard weight per unit of measure. (Refer to PAR. 101 F for standard bushel weights). Example: The standard weight for a bushel of wheat is 60 lbs. (10256 lbs. ÷ 60 lbs. = 170.9 bushels). This bushel amount would be entered in the column for gross production on the claim form. Refer to Exhibit 4, Unit of Measure of Production, by Crop.

E Quality Adjustment

For farm-stored production, samples for quality adjustment **can only be taken by the adjuster**, UNLESS the:

(1) Load(s) were weighed at a commercial facility and at the same time load samples were extracted by authorized personnel (not insured) at the commercial facility;

(2) Samples were analyzed by a grain grader licensed as stated in PAR. 96 E (for mycotoxin damage, refer to paragraph 102 H for acceptable testing facility); AND

(3) Adjuster is able to verify the preceding with the elevator.

See Section 5 for more information regarding adjustments to production and who is authorized to take samples of production.

F Pre-harvest Appraisal are required or permitted in lieu of the adjuster measuring and accepting the insured's weight tickets, WHEN:

(1) Production will be stored (or used (processed) and stored) in such a manner that the production cannot be measured (refer to PAR.'s 85 B (3) and (4) to determine whether the weighed production was within the 3% tolerance as stated in A (1) (a) above (e.g., high-moisture corn stored in airtight structures). If a pre-harvest appraisal is not done to determine the production-to-count, the claim must be denied because the insured does not have verifiable records of the stored production in the absence of the AIP being able to verify the actual harvested production in the structure by measuring the production in the structure.

(2) As stated in PAR. 85 (9), when the insured intends to farm-store production in commercial-sized storage structures (size larger than is used in normal farming operations) and when the insured agrees, pre-harvest appraisals may be done to determine the insured's production to count. HOWEVER, if a pre-harvest appraisal is NOT done, the AIP MUST measure the stored production or have the

stored production measured at their expense. When loss adjustment inspections are required for such units, the insured CANNOT be charged or told by the AIP that they have to pay for such measurements.

G Adjuster-Determined Weight of Harvested Farm-stored Forage Production

Adjusters often use portable scales to perform appraisals. Adjusters are also allowed to use portable suspended scales to determine the average weight [1/] of representative bales of forage production to determine harvested production. The scales must be calibrated for accuracy and verified by the AIP. The adjuster can accept the insured's record of the average weight [1/] of the farm-stored bales the insured has weighed on commercial elevator scales or the insured has weighed on his/her own portable suspended scales but ONLY if the adjuster can verify the accuracy of the scale and determine if the weights appear to be representative of the farm-stored bales.

[1/] average weight of at least 2 bales for large bales and 3-4 bales for small bales.

H Verification and Documentation of the Weighed Production

Verify and document that the insured's scales and weight tickets/records met the criteria stated in subparagraphs B and C above. The following must be retained in the insured's claim folder: Insured's weight tickets/records and insured's moisture records (if applicable), location of scales used to weigh the production, storage-structure location charts, adjuster's bin measurement production calculations, moisture determination, if applicable, tolerance comparison of production as stated in subparagraph A (1) above, fed production records, proration calculations if adjuster had to prorate production among multiple units in a bin, and any other pertinent information.

105 AUTHORIZATION TO ACCEPT INSUREDS' STRUCTURE MARKINGS, LOAD RECORDS, AND COMBINE MONITOR RECORDS

A Measurements Prior to Insured Commingling Production

(1) For purpose of indemnities, AIPs generally cannot accept the insured's determinations of separate unit production when production has been commingled with other units, uninsured acreage production, or different crop years (PAR. 126), unless one of the exceptions in (2) below applies. When a loss situation is probable and the insured plans to store production from multiple units, (or production from uninsured and /insured acreage or multiple crop years) within the same storage structure, PRIOR TO doing so, the insured should request the AIP measure the production. Refer to PRODUCTION PRE-MEASUREMENT SERVICE, PAR. 70.

(2) **POSSIBLE EXCEPTIONS to AIP Production Pre-Measurement When AIP Cannot Timely Perform Production Pre-measurement Service**:

(a) **Weighed production, as stated in PAR. 104**. Insured's weight records (adjusted with insured's moisture determination records, if applicable and acceptable to the AIP) for production from each unit, from uninsured/insured acreage, etc. **The AIP may accept such records provided the AIP is satisfied that all the criteria in PAR. 104 is met; refer to PAR. 104 for more detailed information.**

(b) **Authorization of insureds load records, structure markings, or** combine monitor records **as stated in PAR. 105 B**. If A (2) (a) above does not apply, but the conditions and requirements in subparagraph B do apply, the AIP may allow the insured to use one of the preceding methods (e.g., load records) to keep the unit production (or production from insured/uninsured acreage, if applicable) separate. **The AIP may accept such records, provided the AIP is satisfied the insured's records or structure markings, etc., meets the criteria set forth in PAR. 105.**

B Authorization of Insureds' Load Records, Structure Markings, or Combine Monitor Records in Lieu of AIP Pre-Measurement of Production that is to be Kept Separate

(1) Sometimes the AIP may not be able to timely perform Pre-Measurement Services due to the large number of requests. Also, insureds do not believe they need a measurement of the commingled production because they do not have a production loss (inclusive of quality adjustment) but they have Crop Revenue Coverage, Revenue Assurance, or Income Protection plans of insurance and later have a revenue loss due to the announcement of a harvest price lower than the base price (projected harvest price). In these cases, in lieu of AIP pre-measurements of the separated production within a storage structure, the AIP may authorize (orally or in writing) insureds to use their bin (or other structure) markings, contemporaneous load records from conveyances (definition on next page), or combine monitor (printed) records to keep the production separate, **provided:**

(a) The AIP must annually provide insureds with the criteria and instructions in subparagraphs C and D below **(in writing)** and assures that the insured understands non-compliance with these instructions will result in the production being considered commingled as stated in PAR. 126;

(b) There is no reason to suspect that the grain is infected with a mycotoxin, other than Vomitoxin;

(c) The AIP does not suspect the insured will fail to follow the instructions or will misrepresent the production from each unit or from uninsured and insured acreage;

(d) AIPs document the names and contract numbers of any insured for which this procedure is not allowed; and

(e) All of the conditions in C below are met.

(2) Also, AIPs may allow insureds to follow this same procedure when they may have the need to add multiple units of production or production from insured and uninsured acreage within the same conveyance (definition in D below). If the production within the conveyance is not farm-stored, it must be conveyed to a buying point and all applicable records must be acceptable to the company.

(3) Adjusters must document in the Narrative section of the PW or on an attached Special Report whether the:

(a) Insured's records or structure markings were used to keep production from multiple units separate or to keep production from insured and uninsured acreage separate; or

(b) Adjuster measured the production in the storage structure prior to another unit of production being added, or production from insured acreage added to production from uninsured acreage or vice versa. If the adjuster measured such production, the adjuster must document his/her name and the dates that such production was measured.

C Criteria Needed to Accept Insured's Production Records or Storage-structure Markings

(1) If load records or combine monitor records are used to keep production separate, the loads are recorded as outlined in D below.

(2) If structure markings are used, the structure is marked and identified as outlined in subparagraph D below.

(3) There is no production from prior years in the structure, unless the production has been measured by the AIP or another USDA agency just prior to the current year's production being added. If another USDA agency's measurements are used, you must determine whether the grain was leveled.

(4) The total production within the structure must be accounted for; i.e., all production stored in the storage structure can be identified separately by unit number or field I.D., uninsured acreage, etc.

D Insured's Instructions for Load Records, Storage Structure Markings, Printed Records from Combine Monitors

Contemporaneous and Conveyance, as used in the following paragraphs, are defined as follows:

- **Contemporaneous** - Occurring or originating during the same time.

- **Conveyance** - Anything in which agricultural commodities are transported. This may include combine hoppers, commodity bins, grain carts, grain wagons, farm truck, semi trailer, railcar, or barge. The term "transported" does not include all forms of grain movement; e.g., the following are not conveyances: grain augers, grain dryers, elevator legs, or picking lines.

(1) Loads

Maintain a contemporaneous ledger, by crop, recording loads of production for the crop identified by unit and/or field identification, date of harvest, identity of the conveyance used to transport the grain to the bin and the estimated bushel volume per conveyance. The adjuster must verify that the field identification can be correlated with the unit numbers for the crop for the current crop year. If a field identification cannot be correlated to a unit number for the crop, the production must be considered commingled, and the procedures in PAR. 126 apply. Insured's are permitted to adjust their load records for excess moisture, and if they have done so, this is what will be used to compare against the adjuster measured and calculated production (including adjustments for moisture if the adjuster's moisture test shows excess moisture).

(2) Storage Structure Markings

Identify the depth of such production by marking the storage structure with a permanent marker. Write the unit number(s) and/or field identification from which the production was harvested, and date and initial the mark. Also, on the storage structure, identify and mark the depth of uninsured-acreage production separately from insured-acreage production when the storage structure will contain both. The adjuster must verify that the field identification numbers can be correlated with the unit numbers for the crop for the current crop year. If a field identification cannot be correlated to a unit number for the crop, the production must be considered commingled, and the procedures in PAR. 126 apply.

(3) Records from Combine Monitors

Printed records from combine monitors must show the location of field (field identification), name of crop, date, and number of pounds or bushels of the crop. Insureds must also, identify the unit number that correlates with the field identification on the records. The adjuster must verify that the field identification can be correlated with the unit numbers for the crop for the current crop year. If a field identification cannot be correlated to a unit number for the crop, the production must be considered commingled, and the procedures in PAR. 126 apply. If production from the combine monitor records has been adjusted for moisture by the insured or automatically by the combine monitor, this recorded amount will be the amount compared against the adjuster's measured and calculated production, (including adjustments for moisture if the adjuster's moisture test shows excess moisture).

E <u>Adjuster Verification of Insured's Records or Storage-Structure Markings and Production Determination From These Records</u>

(1) Load Records or Combine Monitor Records

(a) Verification

<u>1</u> Verify whether the load records from the conveyance appear to be recorded contemporaneously.

<u>2</u> Verify whether the insured meets the criteria to accept records as stated in subparagraph C.

<u>3</u> Measure empty conveyance to verify reasonableness of the recorded loads, unless conveyance is not available; e.g., custom harvester's conveyances. If conveyance is not available try to determine from the insured (or other reliable source) the capacity of the conveyance used.

<u>4</u> If the insured has not met the criteria in subparagraph C and/or followed the instructions in subparagraph D, or the recorded loads are not reasonable, the production must be considered commingled and the procedures for commingled production in PAR. 126 will apply.

(b) Production Determination from Records

Follow the steps below, to determine the production to be recorded for each unit on the claim:

Step 1 **Adjuster-determined Production.** The adjuster must measure the total production in the structure and determine the gross amount of production in the storage structure in the appropriate unit of measure for the crop; e.g., bushels or pounds and add any production fed to obtain the total adjuster-determined production.

Step 2 **Insured-recorded Production.** Sum the bushels/pounds from the insured's load records (inclusive of any production fed) or combine monitor records for each unit (and/or production from uninsured acreage). Sum the totals of all unit(s) (including the total sum of production from uninsured acreage, if applicable) in the storage structure. If necessary, convert the insured's recorded production to the appropriate unit of measure for the crop; e.g., bushels or pounds.

Step 3 **Comparison.** Compare the results of Step 1 (Adjuster-determined Production) against Step 2 (Insured-recorded Production).
If Step 1 and Step 2 results are exactly the same, then no further calculation is required. If they do not match proceed to Step 4.

Step 4 **Proration**. If the results of Step 1 (Adjuster-determined Production) and Step 2 (Insured-recorded Production) are <u>not exactly</u> the same the production must be prorated by using the load records of a conveyance or combine monitor records to prorate the commingled production contained in adjuster-measured structure (i.e., grain bin, semi-hopper, etc.) on a percentage basis. (Refer to example below.).

PRORATION EXAMPLE: Insured's load records for a conveyance (or combine monitor records) indicate six 250.0 bu. loads in bin "A" from unit 00101 and four 250.0 bu. loads also in bin "A" from unit 00102. The adjuster measures bin "A" and determines a total of 2,618.0 bu. in bin "A."

Percentage of each Unit in Structure Based on Insured's Load Records:

6 loads X 250.0 bu./load = 1,500.0 bu. unit 00101 ÷ 2,500.0 total = 60%
4 loads X 250.0 bu./load = <u>1,000.0 bu.</u> unit 00102 ÷ 2,500.0 total = 40%
2,500.0 bu. total (in bin based on insured's records)

<u>Proration of Measured Production to Each Unit in Bin:</u>

2,618.0 bu. (total measured and calculated production in bin) X 60% = 1,570.8 bu. production to count for unit 00101

2,618.0 bu. (total measured and calculated production in bin) X 40% = 1,047.2 bu. production to count for unit 00102

(2) Storage Structure Markings

(a) Verification

Verify whether the insured meets the criteria to accept records as stated in subparagraph C. Verify with the insured whether the production in the structure was leveled prior to the addition of production from another unit (from uninsured acreage, if applicable), and whether the structure marking was made at the base of the cone or height of the cone. If the insured has not met the criteria in subparagraph C and/or followed the instructions in subparagraph D, the production must be considered commingled and the procedures for commingled production in PAR. 126 will apply.

(b) Production Determination from Individual Unit Production From Markings (and/or production from insured/uninsured acreage, if applicable)

Determine production for each unit or for production from insured and uninsured acreage by using the insured's markings for each. If the insured has not leveled the production before adding additional production from another unit (uninsured acreage, if applicable), the adjuster must measure the cone at the top of the structure and use this measurement for the cone measurement for the bottom unit of production in the structure. For any unit atop of the bottom unit of production in the structure, no cone measurement will be used for these upper units of production (uninsured acreage, if applicable). This is because the cone of the lower unit protrudes into the upper unit and offsets the cone that is atop of that unit. The volume of the grain in all cones in the structure is considered to be the same.

(c) Testing the Accuracy of the Calculated Individual Unit Production

1 To test the accuracy of the calculated individual unit production, the total production in the bin and the sum of the calculated production for the two individual units should be the same. Using the example below the total bin production calculates to be 2307.2 bu. (18^2 X .7854 X 10.0' X .8 = 2035.8 + cone measurement 18^2 X .2618 X 4.0' X .8 = 271.4).

The production for the two units stated above calculates to be the same amount; i.e., unit 00100 production, 1085.7 + unit 00200 production, 1221.5 = 2307.2.

2 If the bin marking was made at the height of the cone, the depth of the unit must be adjusted for the height of the cone by using the height of the cone for the top unit (uninsured acreage, if applicable) in the bin.

3 If the measured and calculated production is exactly the same, no further action is needed. However, if total measured production in the bin did not match the sum of each marked unit in the bin, then the total measured production in the bin must be prorated proportionately to each unit based on a percentage basis.

SEE EXAMPLE OF ACCURACY TEST BELOW:

Example of Accuracy Test:

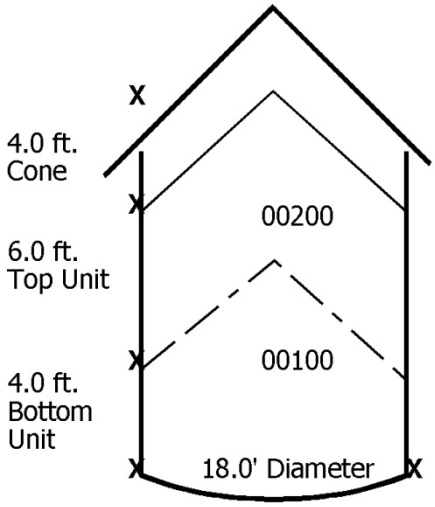

The diameter of the bin is 18 feet. The depth of the cone at the top of the bin is 4 feet. There are two units of corn in the bin. Unit 00100 is the unit at the bottom of the bin, and unit 00200 is the unit at the top of the bin. (The depth measurements for each unit marked on the bin did not include the height of the cone.) The depth of unit 00100 is 4 feet, and the depth of unit 00200 is 6 feet.

Unit 00100 gross stored production: (bottom unit in bin)
18^2 X .7854 X 4.0' X .8 = 814.3 bu.
Cone - 18^2 X .2618 X 4.0' X .8 = 271.4 bu.
Total 1085.7 bu.

Unit 00200 gross stored production (top unit in bin): 18^2 X .7854 X 6.0' X.8 = 1221.5 bu.

Total Production from Unit 0100, Cone, and Unit 0200 = 2307.2 (1085.7 + 1221.5)

See Example of Proration Instructions below

Example of Proration:

Calculated Production Using the bin markings from example above:

Unit 00100 = 1085.7 bu. ÷ 2307.2 bu. (total of unit 00100 and 00200 = 47%
Unit 00200 = 1221.5 bu. ÷ 2307.2 bu. (total of unit 00100 and 00200 = 53%
Total 2307.2 bu.

Total measured and calculated production = 2485.4 bu.

Proration of Measured Production to Each Unit in Bin:

2485.4 (total measured production in bin) X 47% = 1168.1 bu. production to count to unit 00100

2485.4 (total measured production in bin) X 53% = 1317.3 bu. production to count to unit 00200

F Quality Adjustment Determinations

Quality adjustment is allowed if the production qualifies as provided in the policy and/or SPOIs and if the samples are extracted from the storage structure by the AIP's representative (samples cannot be taken by the insured). Samples for any mycotoxin other than Vomitoxin must be taken by the adjuster prior to the production entering storage.

(1) Quality will be determined from the samples extracted from the bin by the adjuster.

(2) If significant differences in grain quality between (or among) units are indicated on the truck ledger, storage structure, or a storage structure ledger these significant differences (by individual unit) can be allowed only if the adjuster can assure that a sample can be extracted from the structure for each unit in the structure, and that the tested samples reflect the significant differences recorded

on the truck ledger, storage structure, etc. Otherwise, the average sample of what is in the bin should be used/applied to all units in the bin; i.e., one test weight, one moisture percentage, one Vomitoxin sample, etc.)

(3) Document in the narrative of the claim or on a Special Report any significant differences in grain quality.

G Non-quality Adjustment Determinations

Moisture percentages, FM/dockage percentages, and non-quality levels of test weight would be handled the same way as stated in F above.

H When Claims Can Be Finalized

DO NOT finalize claims on units with production in such structures until all production from all units, uninsured acreage, prior crop year(s), etc., within the structure can be accounted for (Refer to subparagraph E above).

I Additional Information

This authorization is to be used prudently and is not to be considered as a routine means to satisfy the insured's responsibility to keep production separate by units and uninsured acreage, etc. The insured is still responsible for giving timely notice to the AIP that production from the unit needs to be measured so that the AIP has the opportunity to do so, rather than rely upon the insured's structure markings, load records, or combine monitor records.

J Adjuster Determination

The adjuster must be satisfied that the insured has met all the requirements of this procedure and the structure markings, load records, or combine monitor records are reasonable between units, uninsured acreage production, or crop years. Follow the procedures in subparagraph E above and PAR. 84 to determine reasonableness of the unit production. If the adjuster is not satisfied with reasonableness of the production determinations for a unit(s) based on the storage structure markings, load records, or combine monitor records such production will be considered commingled. Production for such units will be determined based on the procedure in PAR. 126.

106 WHEN GRAIN IS STORED IN GRAIN BAGS

A AIPs may determine grain stored in grain bags using the unusual-shaped-structure procedures in PAR. 113 to determine the gross cubic feet of grain in the bags; i.e., measuring the component parts as stated in PAR. 110 (3) (e). A Combined Test Weight and Pack Factor are applicable to the crops listed in PAR. 110 C (1). Gross cubic feet and Combined Test Weight and Pack Factor are part of the farm-stored Production-to count-formula, as stated in PAR. 111. When making measurements, the adjuster must:

(1) Determine the Combined Test Weight and Pack Factor as stated in Steps 1-3 of PAR. 110 C (7). In lieu of PAR. 110 C (8), for this structure, calculate the square feet needed to determine the Combined Test Weight Pack Factor, as follows:

(a) Determine the circumference of the grain bag;

(b) Divide the circumference of the grain bag by 3.14 to determine the diameter;

(c) Square the diameter (diameter^2); and

(d) Multiply this result by .7854 = square feet.

(2) Obtain the required test weight sample (plus applicable samples for quality, etc.). If the required test weight samples cannot be obtained, the production determination cannot be completed. AIPs should caution adjusters to not cut or otherwise attempt to open the bag to obtain the samples. Only the insured should open or authorize the opening of the bag so the adjuster can obtain samples for test weight and quality purposes. Samples for quality must be taken no later than 60 days after the calendar date for the EOIP. If the adjuster cannot obtain samples prior to this date for the purpose of determining grain quality, including samples to determine Vomitoxin, no quality adjustment will be allowed.

CAUTION: Except for Vomitoxin, samples to determine Aflatoxin or other mycotoxins, substances, or conditions injurious to human or animal health must be obtained by the adjuster prior to the grain entering the bag. Refer PAR. 102 for additional information.

B The insured is allowed to request, in writing, to delay measurement of farm-stored grain and settlement of any potentially associated claim for indemnity up to 180 days after the end of the insured period. Refer to subparagraph A (2) above for when samples for quality must be obtained, and also refer to PAR. 69 A (3) (d). This request can also be used when the insured does not agree with AIPs determination of the volume of grain in the bag(s) to allow the insured additional time to remove the grain from the bags to deliver to a buyer or move to permanent farm-storage structure for the AIP's redetermination of the amount of production prior to completion of the claim.

C If prior to the inspection of final settlement of the claim the insured delays measurement of the grain up to 180 days after the end of the insurance period:

(1) If ALL of the grain from the bag(s) has been removed and delivered to the buyer, the AIP may determine the amount of production to count from the settlement sheet(s) to settle the claim, provided the production from the units delivered from the grain bags can be identified. For quality adjustment of grain, refer to subparagraph A (2) above and PAR. 69 A (3) (d).

(2) The AIP may determine the production in the grain bag, as specified in item A (1) above, to settle the claim, provided the amount of production for each separated unit contained in the grain bag can be identified when:

(a) A single unit or multiple units have been weighed prior to being placed in a grain bag, the weight tickets may be used if all of the criteria in PAR. 104 have been met.

(b) Multiple units have been placed in a grain bag and the unit production for each unit has been separated by one of the methods allowed in PAR. 105 (e.g., load records) and all of the criteria in PAR. 105 have been met, such production may be used to settle the claims.

(c) Part of the grain stored in the bag(s) has been removed and sold, and part of the grain remains in the grain bag(s), settle the claim based on the settlement sheets for the sold production and measurement of production remaining in the grain bags. For quality adjustment of grain, refer to subparagraph A (2) above.

(3) The AIP may determine production from acceptable feed records as outlined in PAR. 92 to settle the claim when all or part of the grain in the grain bags has been fed. However, if there are no acceptable feed records, the full per-acre guarantee must be applied to the applicable acres.

(4) If by the time the adjuster makes the farm visit to determine the amount of production in the grain bags, the grain in the bags has been moved to a permanent farm storage structure (e.g., bin), the AIP may determine the production in the permanent farm storage structure, provided the unit(s) from which the production was harvested can be identified and the AIP is satisfied that all production for the unit has been established. For quality adjustment of grain, refer to subparagraph A (2) above and PAR. 68 B if the insured requested to delay measurement of the grain for up to 180 days after the EOIP.

107 ROUNDING RULES

A Rounding Computations

Carry out computations to one digit beyond the digit to be rounded.

B Rounding Rules. If the last digit is 4 or less, disregard; if 5 or more, round upward. (Refer to example below.)

EXAMPLE: Bushel fractions are to be rounded to tenths:

100.04 bushels ---------- Record as 100.0 bushels
100.66 bushels ---------- Record as 100.7 bushels

C General Rounding Applications - Round

FOR:	ROUND:
Acres	to tenths (10.0, 10.9) exceptions: tobacco acres, to hundredths (1.05); and raisin acres, to whole acres.
Linear measurement	in feet to tenths (10.0, 10.9).
Bushels	to tenths (100.0, 100.9) except APH yield entries, which are in whole bushels.
Hundredweights	to tenths (1.3, 0.6) except APH yield entries, which are in whole hundredweight.
Tons	to tenths (40.0, 40.9), except for the production guarantee and raisin tonnage, which is rounded to hundredths (40.58).
Insured share percent	to three decimal places (.500, 1.000).
Monetary entries	to cents ($1.00, $1.97). Refer to crop handbooks for exceptions for cotton, peanuts, and peas for quality adjustment values and contract prices for peas and bush beans. (DO NOT USE "$" when making an entry on the claim form.) Final dollar indemnity amounts are rounded to whole dollars.
Cubic feet	to tenths (40.0, 40.9).
Moisture percentage	to tenths (15.7, 16.1).
Foreign Material (FM) percentage	to tenths (3.2, 5.0). Use the normal rounding procedure.
Test weight	to whole pounds (50, 58). Refer to exception in PAR. 85 G.
Shelling percentage	to whole percentage points (80, 85).
Shelling percentage factor	to hundredths (.90, .98).
Corn silage sample weight	in pounds to tenths (12.0, 13.8).
Crops with contract prices	Except bush beans and peas (refer to the crop handbook), contract prices are to three decimal places ($0.125, $1.120). DO NOT USE "$" WHEN MAKING ENTRY ON THE CLAIM FORM.
Pounds	to whole pounds (1752).

108 TABLE TO CONVERT FRACTIONS TO PERCENT FIGURES

TABLE TO CONVERT FRACTIONS TO PERCENT FIGURES																	
	3rd	**4th**	**5th**	**6th**	**7th**	**8th**	**9th**	**10th**	**11th**	**12th**	**13th**	**14th**	**15th**	**16th**	**17th**	**18th**	**19th**
1	.333	.250	.200	.167	.143	.125	.111	.100	.091	.083	.077	.071	.067	.063	.059	.056	.053
2	.667	.500	.400	.333	.286	.250	.222	.200	.182	.167	.154	.143	.133	.125	.118	.111	.105
3		.750	.600	.500	.429	.375	.333	.300	.273	.250	.231	.214	.200	.188	.176	.167	.158
4			.800	.667	.571	.500	.444	.400	.364	.333	.308	.286	.267	.250	.235	.222	.211
5				.833	.714	.625	.556	.500	.455	.417	.385	.357	.333	.313	.294	.278	.263
6					.857	.750	.667	.600	.545	.500	.462	.429	.400	.375	.353	.333	.316
7						.875	.778	.700	.636	.583	538	.500	.467	438	.412	.389	.368
8							.889	.800	.727	.667	.615	.571	.533	.500	.471	.444	.421
9								.900	.818	.750	.692	.643	.600	.563	.529	.500	.474
10									.909	.833	.769	.714	.667	.625	.588	.556	.526
11										917	.846	.786	.733	.688	.647	.611	.579
12											.923	.857	.800	.750	.706	.667	.632
13												.929	.867	.813	.765	.722	.684
14													.933	.875	.824	.778	.737
15														.938	.882	.833	.789
16															.941	.889	.842
17																.944	.895
18																	.947

109 METRIC CONVERSION TABLE

FROM METRIC TO BRITISH UNITS OF MEASUREMENT				
LENGTH	**SYMBOL**	**WHEN YOU KNOW**	**MULTIPLY BY:**	**TO FIND:**
	mm	Millimeters	0.04	inches
	Cm	Centimeters	0.4	inches
	M	Meters	3.3	feet
	M	Meters	1.1	yards
	Km	kilometers	0.6	miles
AREA	Cm^2	square centimeters	0.16	square inches
	m^2	square meters	1.2	square yards
	Km^2	square kilometers	0.4	square miles
	ha	hectares	2.5	acres
VOLUME	m^2	cubic meters	35	cubic feet
	m^2	cubic meters	1.3	cubic yards
MASS (Weight)	G	grams	0.035	ounces
	Kg	kilograms	2.2	pounds
	T	Tones	1.1	tons

110 RECORDING FARM-STORED PRODUCTION ON THE CLAIM FORM

A For production for which the insured's weighed production is not allowed as stated in PAR. 104 and when paragraph 105 does not apply, the procedures in this paragraph applies:

(1) For square, rectangular, and round storage structures:

Entries for internal measurements of structural space occupied by the crop, test weight, and any entries for moisture, dockage, production not to count, and/or quality will be entered in the appropriate columns on the claim form as instructed in the crop handbook. From these entries the net production-to-count will be calculated for the storage structure(s).

(2) Outside measurements of storage structures may be used when internal measurements cannot be obtained; however, the dimension used should reflect the internal space occupied by the crop taking the wall-thickness into consideration. Do not adjust circumference measurements of steel bins for the wall-thickness of the structure because the circumference range on the Round Bin Conversion Chart (Exhibit 14) accommodates varying wall-thickness.

(3) ALL OTHER STRUCTURES (Hexagon, Octagon, Odd Shaped, etc

(a) If the AIP's Production Worksheet requires calculation of gross production for odd-shaped structures, hand calculate gross production adjusted by test weight from these structures, and enter in the column used for gross production on the claim form.

(b) If the AIP's Production Worksheet requires calculation of net cubic feet, hand calculate the net cubic feet from these structures, and enter in the column used for net cubic feet on the claim form UNLESS component parts from an odd shape structure are square, rectangular, or round as explained in (e) below.

(c) Enter any applicable entries for moisture, dockage, quality, test weight (conversion factor, if applicable per AIP's Production Worksheet) or production not to count, etc., in the appropriate columns on the claim form as instructed in the crop handbook and from these entries, make further adjustments to the production entered in the column for gross production to determine the net production.

(d) PAR. 111 shows the steps to calculate gross production adjusted for test weight, pack factor (if applicable)* and PAR. 112 provides gross cubic feet formulas for these structures.

(e) If the odd-shaped structure consists of component parts that are square, rectangular, or round, the individual component-part-measurement for each square, rectangular, conical, or round part in the odd-shaped structure may be entered on the claim as stated in subparagraph B below. Refer to PAR. 113 for unusual (odd-shaped) storage configurations for measurement and computations.

B Documentation. Document any calculations you have made, on a Special Report or other form provided by the AIP, for storage structures requiring entries in the column used for gross production on the claim form or calculations used to obtain square, round, or rectangular component part measurements for odd shaped structure that were entered on the claim form. Copies of calculations are to remain in the contract folder.

C Pack Factors

(1) Pack factors are applicable for the following crops: Barley, corn, grain sorghum, hybrid corn seed, hybrid sorghum seed, oats, popcorn, rice, soybeans, and wheat. The pack factor tables and instructions can be found in the applicable crop handbooks.

(2) For unweighed farm-stored barley, corn, grain sorghum, hybrid corn seed, hybrid sorghum seed, oats, popcorn, soybeans, and wheat that is:

(a) Shelled or threshed whole grain, USE the combination test-weight pack factor as specified in PAR. 110 C and the applicable crop loss adjustment handbooks.

(b) Other than shelled or threshed whole grain; e.g., ear corn, ground grain, cracked grain, etc., use the test-weight factor (see PAR. 101 F (1)) instead of the combination test-weight pack factor as specified in PAR. 110 C and the applicable crop loss adjustment handbook.

(3) Although there are pack factor tables for canola, chick peas, dry peas, flaxseed, lentils, mustard, safflower, and sunflower seed, RMA is not including them because the factors are merely a test weight conversion (Actual TW/Standard TW) with no adjustment for pack in the factors:

(4) Pack factors **are applied** to all farm-stored production stored within a structure or conveyance; i.e., production stored in all shapes of structures and conveyances, including cones, inverted cones, and conical piles of production within the structure or conveyance.

(5) Pack factor are **NOT applied** to farm-stored production not stored in a structure or conveyance; i.e., ground-stored, for example, a conical pile on ground and not having sidewalls.

(6) For production in cones and inverted cones that are **stored within a structure or conveyance**, apply the same pack factor that is applicable to the greatest portion of the structure; e.g., the same pack factor applied to the cylindrical portion would be applied to the cone in the same structure, except when the production does not touch the sidewalls, the square feet of floor space will differ and could result in a different pack factor. Refer to subparagraph (8) (b) 2 below for the square feet of floor space calculation for production not touching sidewalls.

(7) Steps in Determining Pack Factor for all storage structures:

Step 1: Go to the Combination Test Weight and Pack Factor Table in the appropriate Handbook.

Step 2: Find the column for "Test Weight" and find column having the range of square feet of floor space for the stored grain.

Step 3. From the line showing the correct test weight move across the line to the appropriate column of square feet to find the correct pack factor. To determine square feet, refer to subparagraph (8) below.

EXAMPLE: Suppose corn has a test weight of 56 pounds and is stored in a structure with 254 square feet of floor space (refer to (8) below for determining square feet of floor space). For a test-weight of 56 pounds and 254 square feet of floor space, the Table for Combined Test Weight and Pack Factor shown in the Corn Loss Adjustment Standards Handbook shows the correct pack factor would be 1.018. This factor is placed in the entry space for the test-weight factor on the Production Worksheet as shown in the examples in PAR. 113 E. Refer to PAR. 111 below for the formula for calculating farm-stored production.

(8) Calculating Square Footage of Floor Space to be Used to Determine Combination Test Weight/Pack Factor for all storage structures, except grain bags. Refer to PAR. 106 above for grain bag procedures.

(a) Floor space of a round structure is determined by multiplying diameter X diameter X .7854.

(b) When production in a cone, conical pile, and inverted cone is within a structure and is:

1 **Touching the sidewalls of structure**, the floor space is determined by multiplying structure diameter [1/] X structure diameter X .7854.

[1/] The diameter of the cone, conical pile, or the inverted base is the same as the structure diameter since the production in the cone, conical pile, or inverted cone is touching the sidewalls of the structure.)

2 **NOT touching the sidewalls of structure**, the floor space is determined by multiplying diameter of the base of cone X diameter of base of cone X .7854.

(c) Square footage of floor space in a square or rectangular structure is length X width.

(d) For other structure shapes, refer to PAR. 112, and use the formula for the specific shape without applying the step for depth.

(e) When the structure has to be broken down into component parts, the square footage of the floor space is the total square feet of all component parts.

(f) When determining the square footage of inverted cones, semi- hoppers, gravity wagons, etc., determine the largest portion of the component part, then if there are multiple component parts, sum the total square feet as stated in (d) above.

(g) Refer to the applicable crop handbooks for instructions on determining the pack factor from the Combination Test Weight and Pack Factor Table.

111 FARM-STORED PRODUCTION-TO-COUNT FORMULA

BASED ON THE AIP'S INSTRUCTIONS, ADJUSTERS ARE TO ROUND AFTER EACH STEP OR AT THE END OF THE CALCULATION.

A Regular structures - Round, Square, Hexagon, Octagon, Conical Pile, etc.

The step-by-step process used to determine production for these structures is:

(1) Record measurements accurately.

(2) Determine gross cubic feet (Refer to PAR. 112).

(3) Gross cubic feet minus deductions in cubic feet equal net cubic feet (Refer to PAR. 115).

(4) Net cubic feet times Conversion Factor equals unadjusted gross production (Refer to PAR. 116).

(5) Unadjusted Gross Production times shell factor or sugar factor, if applicable for the crop, equals Adjusted Gross Production for Shell or Sugar Factor. Shell factor is for ear corn. Procedures to determine the shell factor are in the Corn Loss Adjustment Handbook. Refer to the applicable crop handbooks for procedures regarding Sugar Factor. If Shell or Sugar Factor is not applicable, skip to step (6).

(6) Unadjusted Gross Production (Adjusted Gross Production for Shell or Sugar Factor) times FM factor (if applicable) equals Adjusted Gross Production for FM (refer to PAR. 98).

(7) Adjusted Gross Production for FM times moisture adjustment factor (if applicable) equals Adjusted Gross Production for Moisture (refer to PAR. 97).

(8) Adjusted Gross Production

(a) For crops not having a pack factor: Adjusted Gross Production for Moisture X actual test weight divided by standard test weight equals Adjusted Gross Production (refer to PAR. 103). Actual test weight will be used for canola/rapeseed, dry beans, rice, dry peas, mustard, safflowers, and sunflowers. Refer to the Cultivated Wild Rice Handbook for specific test weight to be used.

(b) For crops having pack factors (refer to the list in PAR. 110 C above): Adjusted Gross Production for Moisture X Pack Factor for the applicable crop equals Adjusted Production. Refer to PAR. 110 C (8) above for calculating square footage of floor space, which is needed to determine the pack factor.

(c) For Popcorn, the adjusted production is multiplied by the standard test weight of 56 pounds.

(9) Adjusted Production minus Production Not to Count, if applicable. Refer to PAR. 93.

(10) Production equals the results of last applicable step; i.e., either step (8) or (9).

(11) Production times quality adjustment factor (if crop provisions allow for quality adjustment and production qualifies for quality adjustment) equals Production to Count.

(12) Production to count (refer to PAR.'s 95 and 96) equals the results of step (10) or (11), whichever is applicable.

112 GROSS CUBIC FEET FORMULAS BY STRUCTURE

All of the following measurements are made in feet, to tenths. Round at the end of the calculation unless instructed otherwise by the AIP.

A Square or Rectangular Structure

Length times Width times Leveled Depth equals Gross Cubic Feet.

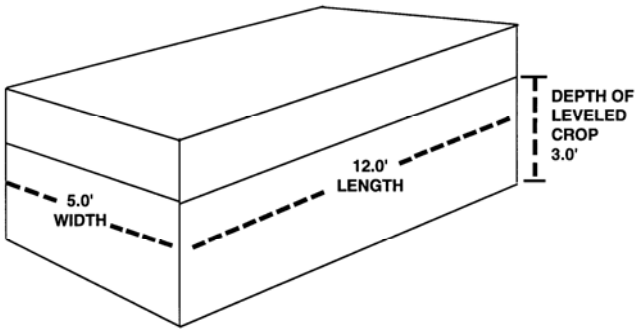

12.0' X 5.0' X 3.0'
GROSS CUBIC FEET=180.0

B Round Structure

(1) Diameter squared times .7854 times Leveled Depth equals Gross Cubic Feet.

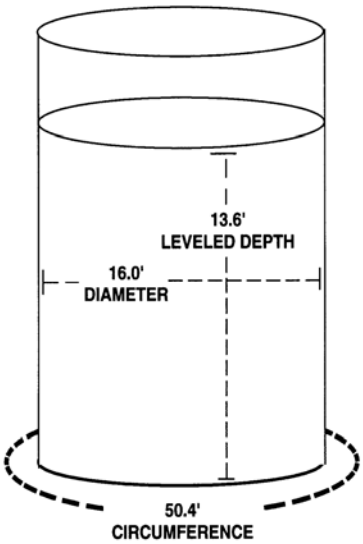

16.0^2 = 256.0 X .7854 X 13.6 =
2734.4 GROSS CUBIC FEET

(2) The circumference measurement can be used to determine the diameter of the bin. Use the Round Bin Chart (Exhibit 14) to determine the diameter of the bin from the circumference measurement. The Round Bin Chart also provides the square foot factor for each size of bin.

(3) The adjuster can mathematically compute the diameter of a round bin by multiplying the circumference measurement by .31831.

The square foot factor (Round Bin Chart, Exhibit 14) times the level crop depth will also determine the gross cubic feet of a round bin.

C Pentagon Structure (5 sides)

Length of Side squared times 1.720 times Leveled Depth equals Gross Cubic Feet.

D Hexagon Structure (6 sides)

Length of Side squared times 2.598 times Leveled Depth equals Gross Cubic Feet.

6.0^2 X 2.598 X 5.0 =
467.6 GROSS CUBIC FEET

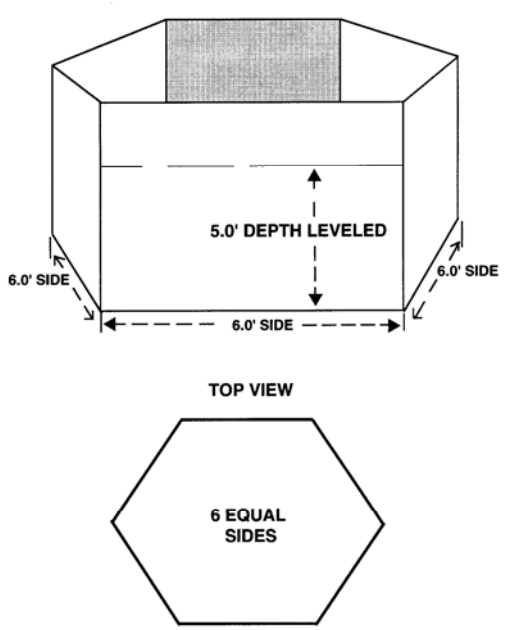

E Heptagon Structure (7 sides)

Length of Side squared times 3.634 times Leveled Depth = Gross Cubic Feet.

F Octagon Structure (8 sides)

Length of Side squared times 4.828 times Leveled Depth equals Gross Cubic Feet.

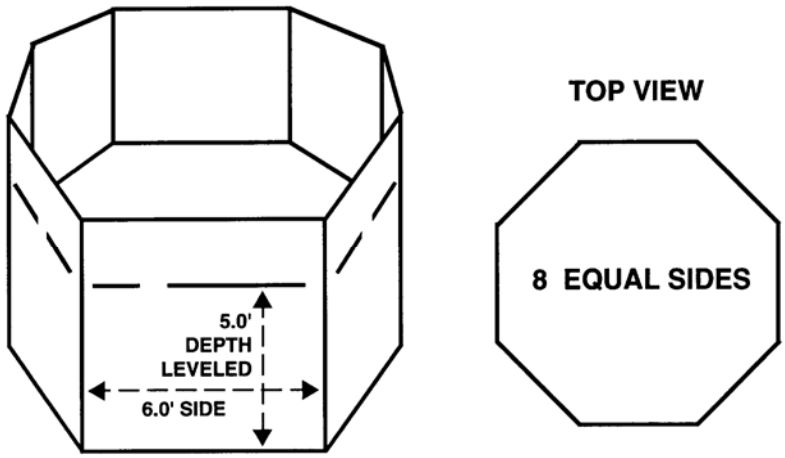

6.0^2 X 4.828 X 5.0 = 869.0 GROSS CUBIC FEET

G Nonagon Structure (9 sides)

Length of Side squared times 6.182 times Leveled Depth equals Gross Cubic Feet.

H Decagon Structure (10 sides)

Length of Side squared times 7.694 times Leveled Depth equals Gross Cubic Feet.

I Undecagon (11 sides)

Length of Side squared times 9.36 times Leveled Depth equals Gross Cubic Feet.

J Dodecagon (12 sides)

Length of Side squared times 11.196 times Leveled Depth equals Gross Cubic Feet.

K Any Structure with More than 12 Sides

Use the formula for a circle for any structure with more than 12 sides.

GO TO NEXT PAGE

L Conical Pile

Diameter squared times .2618 times depth (feet to tenths) equals Gross Cubic Feet.

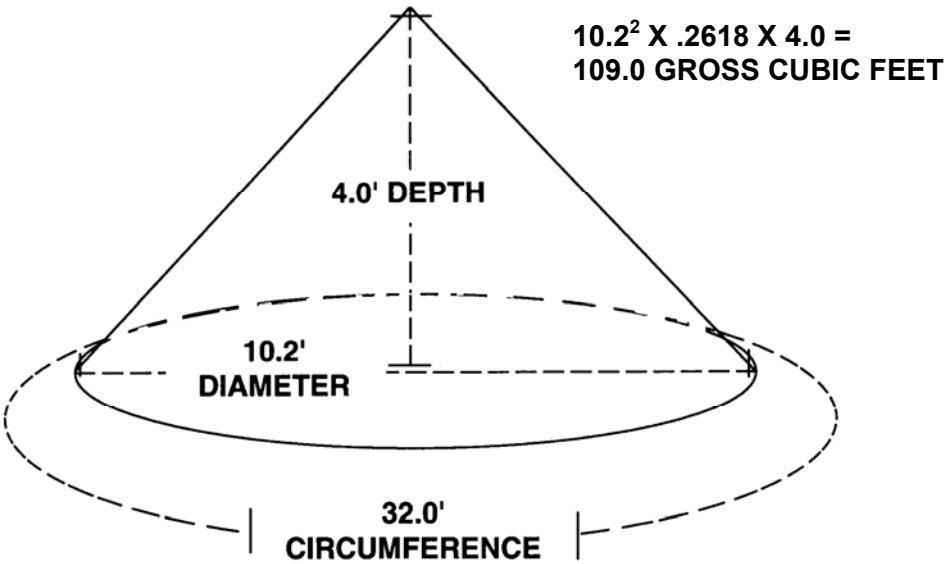

When it is not possible to accurately measure the depth of a conical pile of grain the formula below may be used.

M Formula for determining depth of a conical pile. The length of the slope^2 - the radius (1/2 the diameter)^2 = the height^2. Determine the square root of the result to determine the height of the cone in feet to tenths. (Refer to Exhibit 13 for square root table.)

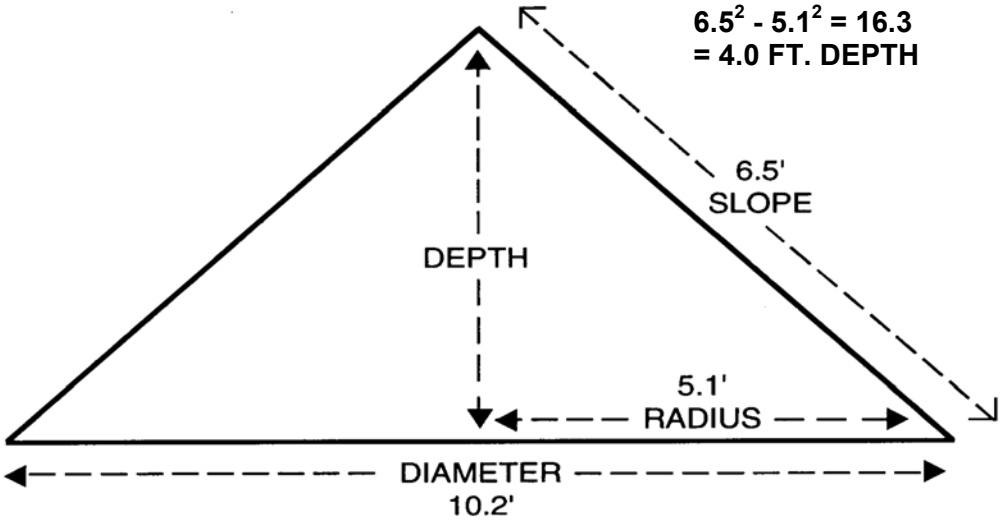

113 UNUSUAL STORAGE CONFIGURATIONS: MEASUREMENTS AND COMPUTATION

A Inverted Cone

(1) The dimensions of an inverted cone are recorded on the claim form in the items used for recording structure measurements. “Cone” is entered in the column entitled “width” on the claim form.

(2) If the inverted cone is a permanent part of a storage structure, record the measurements on a Special Report or other form used for measurement purposes, prior to harvest to be retained permanently with the insured's file folder. To record this information, ask the insured if any of the storage structures have an inverted cone while on a pre-harvest appraisal, acreage report review, growing season inspection, etc. The manufacturer's or builder's specifications may be used if it is not possible to measure the inverted cone during the inspection. If these are not available, FSA may have measurements on record for the particular storage structure in question.

(3) To determine the amount of grain in an inverted cone, obtain these measurements:

(a) Diameter if round; width and length if square or rectangular.

(b) Depth - by actual measurement.

(4) To determine the unadjusted gross production of grain in an inverted cone, follow this formula:

(a) For the following structure shapes:

1 Square. Length times width times 1/3 recorded depth equals gross cubic feet.

2 Round. Diameter squared times .2618 times x recorded depth equals gross cubic feet.

(b) Gross cubic feet minus deductions in cubic feet equal Net cubic feet

(c) Net cubic feet times Conversion factor equals unadjusted gross production.

(5) To determine adjusted gross production (by test weight), follow this formula: Multiply the unadjusted gross production by the test weight factor (refer to Test Weight and Test-Weight Factor, PAR. 101) equals adjusted gross production (by test weight).

(6) Enter on the claim-form-line entry any adjustments necessary for correct computation of production; i.e., entries for FM, moisture, or quality if applicable.

B <u>Cone on a cylinder</u>

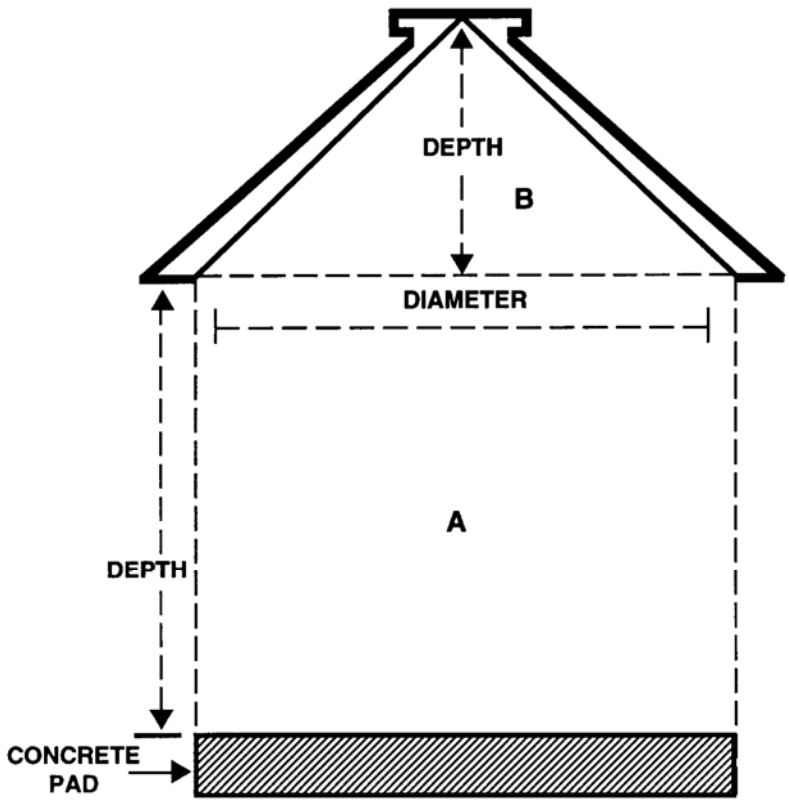

There will be two (2) line entries in the part of the claim form used to record structure measurements.

(1) One line will be identified by "RND" (for production in A) with all determined measurements and adjustments entered for that line.

(2) One line will be identified as "Cone" (for production in B) with all determined measurements and adjustments entered for that line on the Production Worksheet.

C Pyramid

Length X width X height X one-third = gross cubic feet.

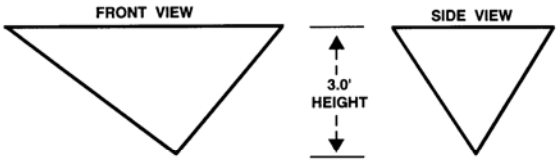

5.0 X 4.0 X 3.0 x .333 =
20.0 GROSS CUBIC FEET

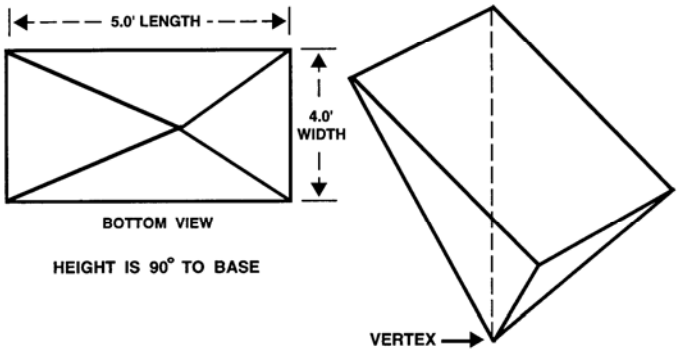

D Triangle Box

Area of triangle (base X height X 1/2) X length of box = gross cubic feet.

5.0 X 3.0 X .5000 X 4.0 =
30.0 GROSS CUBIC FEET

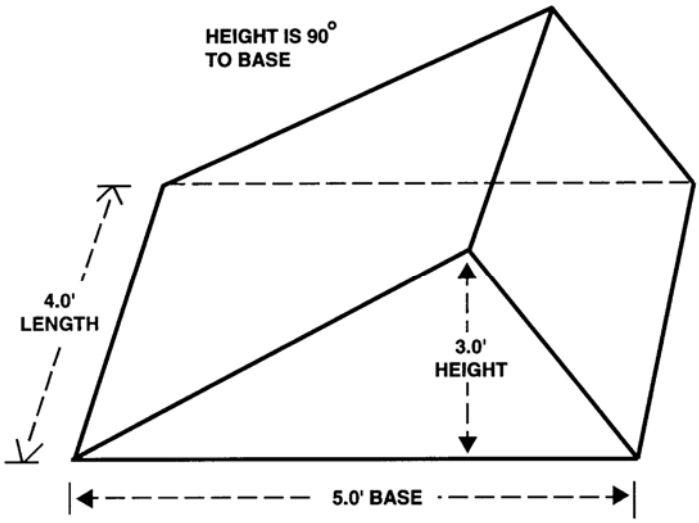

E Production-Not-to-Count in a Storage Structure

Example 1: This example shows structural measurements for the total production in the storage structure in the appropriate columns of the claim form and the calculated adjusted gross production by test weight (BEFORE deductions for moisture, dockage, etc.) in the "Production Not to Count" column. The calculated production-not-to-count will be deducted and the test weight entered in the "Test Weight" column and any other applicable entries for moisture, dockage, or quality will be used to calculate the remaining grain contained in the structure to arrive at the unit production-to-count in the storage structure.

Corn is in the structure.

These measurements are recorded on the claim form as shown below.

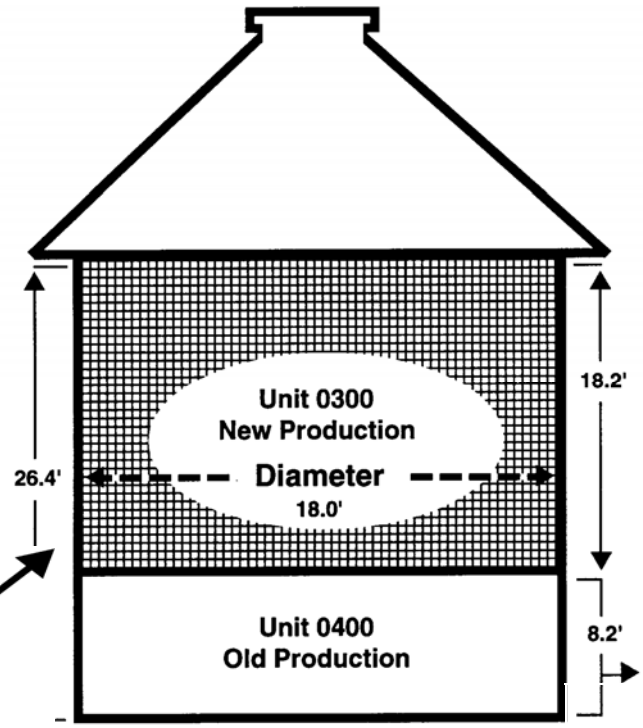

This production is calculated and entered as shown below.

HARVESTED PRODUCTION										
Length or Dia.		Width	Depth		Deduction		Net Cubic Feet	Conver-Factor	Gross Prod.	Bu. Ton. Lbs., CWT.
18	0	RND	26	4			6718.0	.8	5374.4	

Adjustments to Harvested Production					
Shell/ Sugar Factor	FM %	Moisture %	Test WT	Adjusted Production	Production Not To Count
	Factor	Factor	Factor		
			56.0	5741.1	1699.4
			1.018		

Narrative: Production not to count is from unit 00400 production. Unit 00400 production has a depth measurement of 8.2 ft. Bin measurements for unit 00400 attached.

Production-Not-to-Count in a Storage Structure (continued.)

Example 2: This example shows that the production-not-to-count and production-to-count are determined separately. The depth measurement of only the production-to-count is entered in the “Depth” column. The measurement for the production-not-to count is entered in the narrative of the claim form.

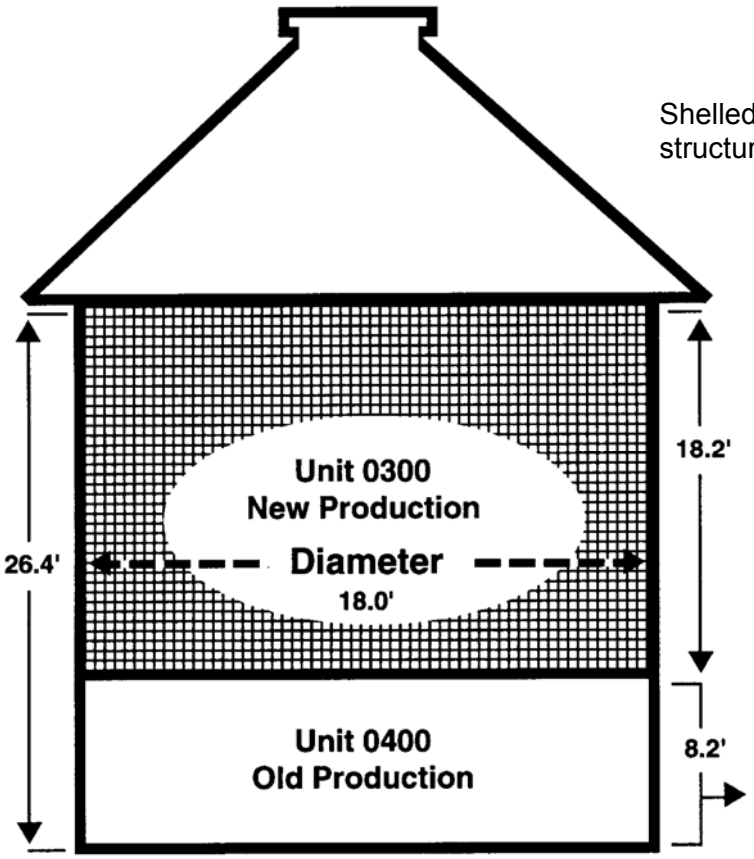

HARVESTED PRODUCTION										
Length or Dia.		Width	Depth		Deduction		Net Cubic Feet	Conver-Factor	Gross Prod.	Bu. Ton. Lbs., CWT.
18	0	RND	18	2			4631.3	.8	3705.0	

Adjustments to Harvested Production					
Shell/ Sugar Factor	FM %	Moisture %	Test WT	Adjusted Production	Production Not To Count
	Factor	Factor	Factor		
			56.0	3771.7	
			1.018		

NARRATIVE: Production not to count from unit 00400, depth 8.2 ft. Previous bin measurements for unit 00400 attached.

F Gravity Flow Wagon

Break the gravity flow wagon into volume components which can be accurately measured, and use the existing formulas to determine the production in each component.

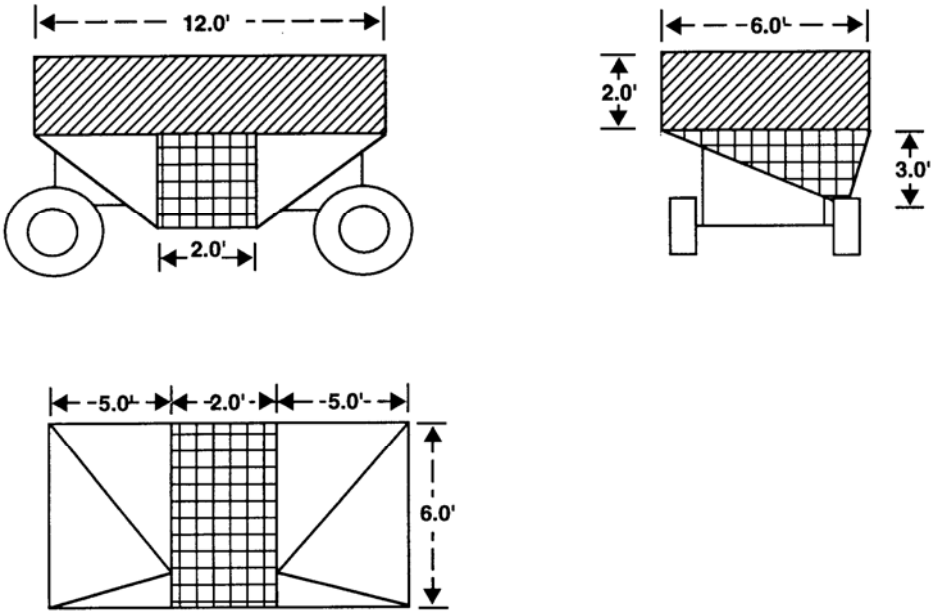

TOP RECTANGLE BOX= 12.0 X 6.0 X 2.0 = 144.0 GROSS CUBIC FEET
(LINED AREA)

MIDDLE TRIANGLE BOX = 6.0 X 3.0 X 2.0 X .5000 = 18.0 GROSS CUBIC FEET
(CHECKERED AREA)

2 PYRAMIDS = 2 X (5.0 X 6.0 X 3.0 X .3333) = 60.0 GROSS CUBIC FEET
(UNMARKED AREA)

TOTAL GROSS CUBIC FEET OF WAGON = (144.0 +18.0 + 60.0) = 222.0

G Flare box wagon

Break the flare box wagon into component parts which can be accurately measured and use the existing formulas to determine the production in each component.

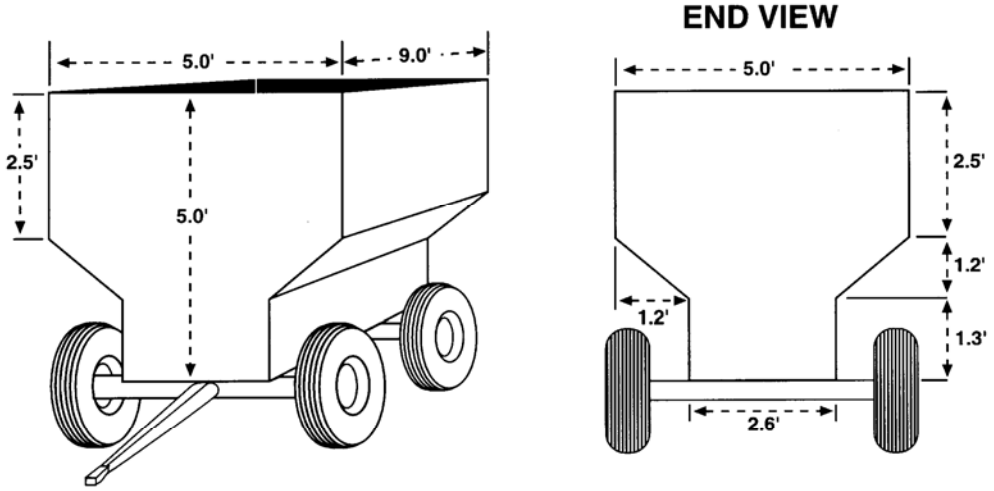

CU. FT OF COMPONENT PARTS

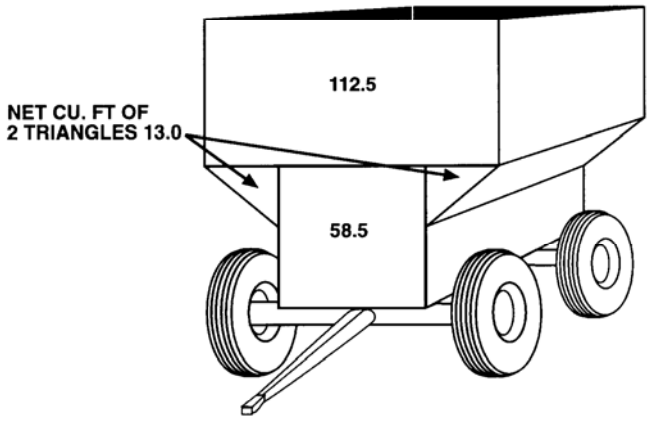

NET CUBIC FEET OF COMPONENT PARTS

9.0 X 5.0 X 2.5	**= 112.5 CUBIC FEET**
9.0 X 2.6 X 2.5	**= 58.5 CUBIC FEET**
9.0 x 1.2 x 1.2 X .5000 + 9.0 x 1.2 x 1.2 X .5000	**= + 13.0 CUBIC FEET**
TOTAL	**184.0 NET CUBIC FEET**

H Oval Storage Structure

Break the oval storage structure into component parts which can be accurately measured and use the existing formulas to determine the production in each component.

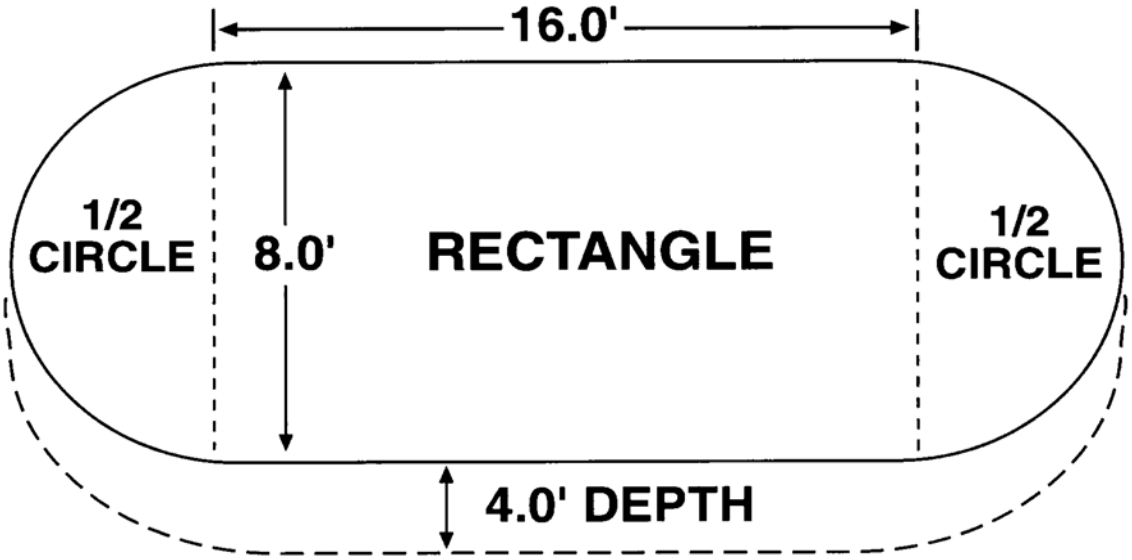

RECTANGLE 16.0' X 8.0' X 4.0' = 512.0 CUBIC FEET

TWO 1/2 CIRCLES - 8.0^2 X .7854 x 4.0 = 201.1 CUBIC FEET
(100.6 cubic feet for each)

TOTAL CUBIC FEET = 713.1

114 ROUND BIN CHART

Refer to Exhibit 14 for converting circumference to diameter and square feet.

115 NET CUBIC FEET FORMULA (CUBIC FEET DEDUCTIONS)

A Net Cubic Feet Calculation. Gross cubic feet minus Cubic feet of deductions equals net cubic feet.

B Determining Deductions. Calculate net cubic feet by computing the cubic feet of studs, vents, etc., which displace the crop inside the structure and deducting that amount from the gross cubic feet.

C Deductions for Regular Type Structures. For regular type structures (round augers, square air vents, etc.) use the formulas given in PAR. 111 and in D below to determine cubic feet deductions.

D To compute studs and joists which displace the crop:

(1) 2" x 4" - multiply the number of studs times depth of the stored crop and divide by 18.

(2) 2" x 6" - multiply the number of studs times depth of the stored crop and divide by 12.

(3) 2" x 8" - multiply the number of studs times depth of the stored crop and divide by 9.

EXAMPLE: A bin with 30 studs (2" x 6") with a depth of 5 feet in the crop:

$$\frac{30 \times 5}{12} = 12.5 \text{ cu. ft.}$$

(4) Angled (diagonal, etc.) support studs should be calculated by dividing the total length of the studs by the appropriate factor.

OBSTACLE DEDUCTION

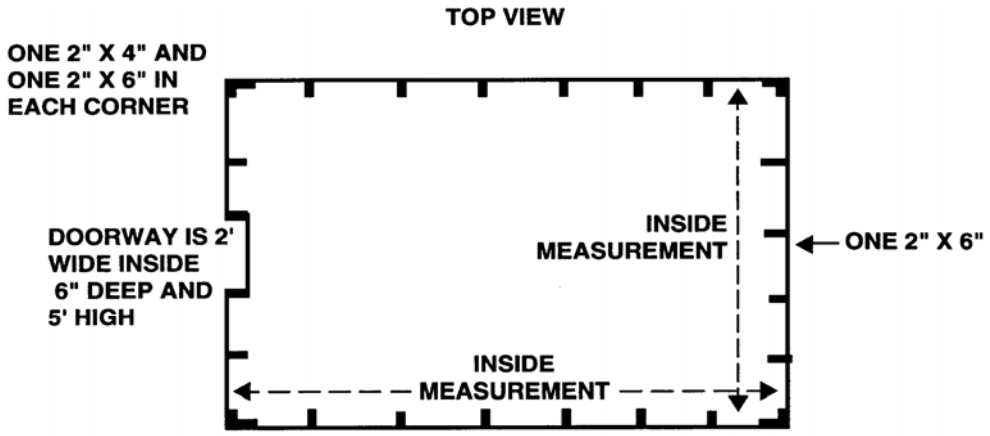

116 CONVERTING VOLUME TO BUSHELS, HUNDREDWEIGHT, OR POUNDS

Net cubic feet times conversion factor, hundredweight, or pounds shown in the chart below equals unadjusted gross production (before adjustments for weight, moisture, and dockage).

CONVERSION FACTOR CHART

CROPS	FOR BUSHELS	FOR HUNDREDWEIGHT	FOR POUNDS
Barley	0.8		
Beans (Dry)	0.8		1/
Buckwheat	0.8		
Canola/rapeseed	0.8		1/
Corn (Shelled)	0.8		
Corn (ear)	0.4		
Corn (Ground Shelled)	0.7		
Corn (Ground Ear)	0.6		
Corn (Hybrid Seed)	0.8		
Flaxseed	0.8		
Grain Sorghum	0.8		
Hybrid Seed Sorghum	0.8		
Millet	0.8		
Mustard	0.8		1/
Oats	0.8		
Peanuts (Spanish SW & SE)			19.7
Peanuts (Runner)			16.9
Peanuts (Virginia)			13.5
Peanuts (Valencia)			17.5
Peas (Dry)	0.8		1/
Popcorn (Shelled)	0.8		
Popcorn (Ear)	0.4		
Potatoes		0.4167	
Rice	0.8		1/
Rye	0.8		1/
Safflowers	0.8		1/
Soybeans	0.8		
Sunflower (oil and non-oil)	0.8		1/
Sweet Potatoes (Pilot)		0.4283	
Wheat	0.8		
Wild Rice (Cultivated)	0.8		2/

1/ To convert to pounds: Net cubic feet x Conversion Factor x Actual Test Weight = adjusted Gross Production for test weight.

2/ Refer to the Cultivated Wild Rice Handbook for specific weight to use for calculations.

PART 4 UNUSUAL/CONTROVERSIAL CASES AND SPECIAL CLAIMS PROCEDURES

SECTION 1 GENERAL INFORMATION

117 GENERAL PROCEDURES TO FOLLOW WHEN INVOLVED WITH UNUSUAL OR CONTROVERSIAL CASES

There will come a time when you will run into problem cases. Whenever you are on an inspection and you suspect problems in the information given to you by the insured or in previous contract information reported to the AIP (e.g., entity, APH, etc.), follow the procedures listed below in the order that they are listed:

A Inspection. Complete the inspection according to procedure.

B Documentation. Document what you find during the on-the-farm inspection, on the claim (MPCI Non-Waiver Agreement (NA) if your AIP uses a MPCI NA rather than a claim) and on a Special Report. (Refer to PAR. 118 for instructions on how to document your findings).

C Insured's Signature. Obtain the insured's signature on the claim (or MPCI NA). Obtain the insured's signature on the Special Report, if possible.

D Adjuster's Signature. If a claim form is used, DO NOT sign the claim. If a MPCI NA is used, the adjuster's signature is required.

E Document Potential Need For Growing Season or Pre-Harvest Inspection

Document on a Special Report the potential need for growing season inspections or pre-harvest appraisals, whenever the need appears, to protect the AIP's position in the case of a controversial claim due to uninsured causes of loss or not following recognized good farming practices. Send a copy of the Special Report to the supervisor designated by the AIP.

118 REPORT WRITING - HOW TO DOCUMENT FINDINGS

A Principles of Report Writing

A report is written to convey concisely what you have found while on an inspection, the reason for the inspection, what problems, if any, you have encountered, and to indicate follow-up actions that may be necessary.

(1) The report should be in a standard form but should be sufficiently flexible to fit the special requirements of the subject matter and the individual(s) to whom it is submitted.

(2) The report should be simple, concise, and as brief as possible.

(3) The tone of the report should be dispassionate, impersonal, and factual.

(4) The report should be legible and devoid of smudges; or crossed-out words, sentences, or sections of the report.

(5) Illustrations such as sketch maps, bin locations, etc., should be used whenever they will promote a better understanding of the report.

(6) Documentation should be reviewed with the next level of supervision at the time the formal report is submitted.

(7) Do not make recommendations.

B Report Arrangement. There are many acceptable arrangements for reports as indicated below:

(1) The title and the report should be short and descriptive.

(2) If the report is lengthy or detailed, a table of contents should list the location of major sections and subsections.

(3) The report should have an introduction that tells why the report was written.

(4) The body should clearly explain the facts or findings presented in the introduction.

(5) The summary is the most important element of the report since many people read only this section thoroughly. State the problem simply, along with any significant findings. Remember, keep the summary brief to maximize its impact. Ideas should be presented in short paragraphs or numbered sentences. State your conclusions without elaboration.

119 POINTS TO REMEMBER WHILE DEALING WITH PROBLEM CASES

When dealing with any problem case, adjusters should NEVER WORK ALONE. As instructed by your AIP, a supervisor, another adjuster, or other AIP representative may ACCOMPANY you on any field or farm inspection involving a problem case.

A Potential Use of Information

Although the potential use of information for legal action cannot be denied, do not voluntarily discuss any possible legal action, as it will discourage a candid discussion. If the insured is prepared to make a statement, it should be submitted in the insured's own handwriting, if possible, and signed and dated by the insured. Do not assist the insured with the contents or wording of the statement. It does not have to be grammatically correct.

If you prepare a statement, have the insured dictate it word for word to you. The insured should read it and agree to its contents by signing and dating the statement. If a minor error is made in the body, it should be corrected and then initialed by the insured. This is very strong evidence that the statement was read and understood. It is also helpful if the statement explains its purpose, but not in a manner to exclude other uses the statement may have.

B Use of Photography or Videoing

(1) It is often helpful on a farm review to have a camera available. Certain conditions detected during reviews may be substantiated and documented very clearly in color photographs. Use of color photographs in reports is encouraged. (In some cases the use of video filming can be even more precise and advantageous for

documentation purposes.) Photographs or video filming of neighboring fields of the same crop, type, variety, grown on same soil type, etc. should be used as comparison. Their use can:

(a) Reduce the volume of writing necessary to explain certain situations.

(b) Substantiate crop conditions, field or stubble conditions, and hidden production.

(c) Reduce very complex situations to easily understood images.

(d) Increase comprehension of the report.

(2) Take photographs or video in a straightforward, open manner to avoid giving the appearance of being secretive or suspicious. There may be occasions when resentment or disapproval of the use of photographs or videos is expressed. In such cases, contact your next level of supervision for a decision on whether to proceed with the photographs or videos.

(3) Document photographs and video using a log to show the following pertinent information (also narrate on videotape): Date taken, where taken (legal description, etc.) and by whom, the subject matter depicted, direction of view, contract and unit number, etc. The log should be initiated at the time the photograph or video are taken, and the photo, and the photo number should correspond with the print number. PHOTOGRAPHS AND VIDEOS SHOULD ALWAYS DEPICT A REFERENCE of the nearest identifiable intersection (document estimated distance to subject field), an integrity picture of the entire field or concerned area, and then close-up photographs (video) identifying the condition. Reference and integrity photographs should always include permanent landmarks when possible. If any individual appears in photographs, identify each individual. Make every attempt to include the insured (or representative in the photograph, in the field.

C Insured Deception or Misrepresentation. On occasion, an insured will attempt to misinform the AIP with respect to insurability or losses. The purpose of the misinformation is usually to qualify for or enhance an indemnity payment; however, there have been situations in which the insured deceives the AIP in order to be consistent with an erroneous position taken with another agency. A search must be made to discover the facts upon which the AIP should act.

D Evidence Admissible and Not Admissible. An AIP employee or a loss adjustment contractor (adjuster) is NOT a law enforcement agent. In the ordinary course of duty, a statement or fact obtained by an AIP employee or adjuster may be admissible in a court of law. The same statement or fact obtained by law enforcement officials may be admissible only if prescribed procedures are followed. This distinction is based on the purpose of the inquiry. As long as reviews are conducted for the sole purpose of obtaining information necessary for the contractual operation of the insurance program, the information obtained is not considered an illegal search or seizure.

E Purpose of Farm Visit. In actuality, questionable claims may be investigated when there is some indication that legal action may occur. This is still a legitimate function as long as the information is intended for AIP use. Consideration must not be given as to the eventual evidentiary value of the information. If it is discovered upon cross examination that a particular farm visit was for the purpose of obtaining evidence for criminal or civil

prosecution, that visit could be considered to have a law enforcement purpose. The absence of prescribed law enforcement procedures would render the information inadmissible.

F Promises to Insured for Cooperation. It should be kept in mind that any promises made to an insured for cooperation may render the information inadmissible, and possibly impose civil liability on the person(s) who made such an offer. Any evidence, no matter how small, indicating that the information supplied by the insured was in consideration of a waiver of civil or criminal charges can void a successful prosecution or, at the least, devalue the evidentiary weight of such evidence.

120 CONTROVERSIAL CLAIM PROCEDURE

If the insured will not agree with the adjustment data, refer the case to the AIP. The AIP representative and the adjuster will review the case with the insured and make every effort to resolve it.

If an agreement cannot be reached with the insured, AIPs may follow the procedure in A and B below or may use a MPCI Non-Waiver Agreement. If a MPCI Non-Waiver Agreement is used, follow the instructions provided by the AIP for completing this form, and follow the documentation procedures in C below. However, if neither the procedures in subparagraph A and B or a MPCI Non-Waiver Agreement is not used, the AIP still must use the procedures for documenting the controversial situation as stated in subparagraph C below.

A Prepare Two Claims

(1) One claim showing the data submitted by the insured, signed only by the insured. (The insured should be provided a copy of the claim and any appraisal worksheets or other documents signed by the insured at the time of this inspection.)

(2) The other claim showing the data determined and the date signed by the AIP representative(s).

B Submission of Claims. Submit both sets of the claims to the person or office designated by your AIP along with complete documentation. Refer to C below.

C Documentation. To the extent possible, the documentation will include the following:

(1) Interviews with the insured, the insured's employees, neighbors, and other persons recommended by the insured as having knowledge of the facts in the case, and additional individuals the insurance-provider-representative determines to have information relevant to the case. The insurance-provider-representative conducting the interview should be accompanied by another individual represented by the AIP.

(2) Signed statements by the insured and other persons interviewed. The insured should personally prepare a detailed Special Report to document the points of disagreement in support of the claim as submitted.

(3) Field Observations

(a) Appraisals of potential production and uninsured cause(s) of loss in the insured field(s) and neighboring fields. Make appraisals explicit as to potential production and uninsured causes i.e., "16-bushel-per-acre potential, 86 weed plants in 36-square-foot area." Any neighboring field used for comparison purposes should be of similar soil type, farmed with similar cultural practices, and planted to the same crop as the insured field.

(b) Properly documented photographs showing the damaged crop and identifiable landmarks of both insured and neighboring fields documenting damage.

(4) Production data

(a) Harvested production data from insured field(s).

(b) Harvested production data from neighboring field(s).

(c) Photographs, if pertinent to the case.

(5) Signed statements by AIP representatives involved in the case. Do not include any evidence, insinuations or opinions which do not have complete supporting facts in the statements, nor references to the insured's personal habits or traits. Prepare the statements in a manner that will lead the reader to a logical conclusion based upon the facts presented.

SECTION 2 UNUSUAL/CONTROVERSIAL CASES

121 CONTROVERSIAL CLAIM: UNINSURED CAUSES OF LOSS

A General Information

The contract provides protection only against unavoidable loss of production due to the named insured causes that occur during the insurance period. It is specific as to what causes of loss are insured against; therefore, all other causes of loss are not insured. Moreover, any loss from the cause(s) named is not insured if it was avoidable. For example, loss due to failure of the insured to take adequate measures to control insects, plant disease, or weeds when such measures are practical and have proven effective in the area is AVOIDABLE and is an UNINSURED cause of loss. However, if the insured carried out recognized and accepted measures to control insects or plant disease (if provided as insured causes) or weeds, these causes are considered UNAVOIDABLE INSURED CAUSES. Although weeds are not a stated insured cause, the FCIC will consider damage caused by them as insured IF recognized and accepted control measures were used, and if adverse weather directly caused the control measures to be less effective.

B The named uninsured causes of loss can be found in the Basic Provisions, individual crop provisions, and actuarial documents. Causes of loss not listed as an insured peril, or that are not due to a naturally occurring event are also considered uninsured causes of loss. For example, theft of a crop is an uninsured cause of loss. Also refer to PAR. 78 for list of uninsured causes of loss that are specified in the Basic Provisions.

C Included in Total Production to Count

Most policy provisions require that total production to count include all of the following:

(1) An appraisal for potential production lost due to uninsured causes. (Uninsured cause appraisals are not included in APH determinations.)

(2) An appraisal of not less than the per-acre guarantee (per-acre dollar amount of insurance for dollar crops) for any acreage:

(a) Abandoned,

(b) put to another use without the AIP's prior written consent,

(c) damaged solely by an uninsured cause, and

(d) for some crops, for which the insured failed to provide records of production that are acceptable to the AIP.

(3) Some crop provisions may also require notification to the AIP when the crop will be direct marketed and failure to provide such notification may result in at least an appraisal of the per-acre guarantee or per-acre dollar amount of insurance.

D Contained Water

In accordance with the Basic Provisions, flooding from water contained by any governmental, public, or private dam or reservoir project is an uninsurable cause of loss. When flooding has occurred, if the elevation of the contained water (e.g. subject reservoir), as measured by the Corps of Engineers or other public source, exceeds the elevation of the insured acreage at the time of loss, the flooding will be considered to have been caused by the contained water (uninsured cause) unless the insured can prove otherwise. Refer to PAR. 78 A (6) for more information, including details on verification and documentation.

E Chemicals. Any loss of marketability of crops due to misapplication of chemicals **or application of chemicals which are controversial**, **withdrawn from sale, etc.**, IS NOT INSURED under the insurance contract unless provided specifically as a condition of the contract.

F Loss Due Solely to Uninsured Causes

The AIP cannot indemnify an insured when all of the loss is due solely to uninsured cause(s). In such cases, the appraisal must not be less than the production guarantee or amount of insurance. When the appraisal is more than the production guarantee, use the actual appraisal.

G When loss is due to uninsurable cause(s):

(1) Consider production on same or similar crop(s) on other farms in the area, if available.

(2) Verify cause of loss (e.g. apparent loss may be poor weed control; however, the damage may have been indirectly caused by insufficient rainfall to activate a properly applied herbicide).

(3) Make an appraisal that represents only that part of the loss that is due to uninsured or avoidable cause, and a separate appraisal for potential production remaining.

(4) Discuss appraisals with insured.

(5) Determine efforts to prevent or control the situation (chemical used and/or methods followed). Record the number of applications and dates they were applied based on receipts or other third party records.

(6) Determine efforts neighbors and others in the community used to prevent or control the same situation.

(7) Photograph the evidence of the crop in question and surrounding farms, with identifying landmarks in each photograph.

(8) Compare productivity and yields of surrounding farms. The suggested comparison formula is found in subparagraphs "L" and "M."

H In every case, establish that the damage or loss is due:

(1) Solely to one or more unavoidable insured causes(s).

(2) To both unavoidable insured cause(s) and uninsured cause(s).

(3) Solely to one or more uninsured causes, (including avoidable insured causes).

I Contact AIP. If on the initial inspection you are satisfied that the loss adjustment will involve uninsured cause(s) of loss, contact and advise the AIP of the situation. Request assistance with the adjustment. Circumstances may warrant that an AIP-employee accompany the adjuster.

J Uninsured causes of loss could be determined at the time of:

(1) Preliminary inspections.

(2) Final inspections.

(3) Quality assurance reviews.

(4) Farm visits made to obtain an original acreage report, to revise an acreage report, or make a growing season inspection.

(5) Making appraisals for APH record-keeping purposes.

(6) Driving by an insured farm on other assignments. Such observations will be documented on a Special Report and provided to the insured, putting the insured on notice that the AIP is aware of the damage by livestock, herbicide drift, etc.

K Failure To Follow Good Farming Practices

The contract does not cover any loss that is due to the insured's failure to follow recognized good farming practices. Such farming practices vary by crops and by areas. SOME of the more common uninsured CAUSES of loss DUE TO FAILURE TO FOLLOW recognized GOOD FARMING PRACTICES are:

(1) Failure to plant the recommended quantity of seed.

(2) Improper seedbed preparation.

(3) Failure to properly plant, care for, or harvest the insured crop.

(4) Failure to timely or properly apply control measures recommended by agricultural experts for the control of insects, plant diseases or weeds.

(5) Failure to apply adequate water under an irrigated practice and/or failure to timely apply irrigation water.

(6) Planting another crop (except winter legumes) into a growing cotton crop.

(7) The use of chemicals resulting in damage to the insured crop.

L Concepts of Determining Uninsured or Avoidable Insured Cause(s) of Loss

(1) When insured cause(s) of loss are present in the area, the yield potential of the crop, before any uninsured cause(s), must be determined. For example, the yield potential determined from comparable acreage of the crop without uninsured cause(s) of loss is 70 bushels. If 30 bushels of potential remain in the field or have been harvested and all other cause(s) are uninsured, then 40 bushels of production were lost due to uninsured cause(s) regardless of the production guarantee.

(2) If comparable acreage is available, use it as the basis for determining yields due to uninsured cause(s) of loss. Comparable acreage is acreage that is planted to the same crop following the same farming practices, management practices, similar planting dates, etc. that has not been damaged by uninsured cause(s) of loss.

(a) If the insured has comparable acreage, this acreage should be used to determine the yield basis for uninsured cause(s) of loss.

(b) When comparable acreage is not available on the insured's farming operation, comparable acreage from other farms in the community should be used to determine the yield basis for uninsured cause(s) of loss.

(c) When comparable acreage is not available, consider using APH yields on the insured's farm and/or farms with similar productivity to determine the yield basis for uninsured cause(s) of loss.

(3) When damage due to an insurable cause(s) (drought, frost, freeze, excess precipitation, etc.) has occurred on surrounding farms, care must be taken to identify only that portion of the production lost due to uninsured cause(s).

(a) Determine the yield potential of comparable acreage of the crop without uninsured cause(s) of loss. Compare this yield potential to the production guarantee and use the higher of the two as the yield for determining production lost due to uninsured causes. (Refer to L (2) above, if comparable acreage is not available.)

(b) When unharvested potential remains in the field, appraise the potential remaining and subtract it from the yield determined in subparagraph (3) (a) above. The difference is the appraisal for uninsured cause(s) of loss.

(c) When no unharvested potential remains in the field, determine the yield as outlined in subparagraph (4) (a) above and use as the appraisal for uninsured cause(s).

(d) Enter any production harvested from acreage damaged solely by uninsured cause(s) as production not to count after proper appraisal entries are made.

(4) Appraisals for uninsured cause(s) must always be discussed and the impact on the loss explained to the insured. Always include full information in the report as to the uninsured cause(s) of loss and the basis used for determining the amount of production lost by such causes.

M <u>Using Other Farms to Determine Production Lost Due to Uninsured Cause(s)</u>

Give proper weight to what other farmers, who did not have uninsured causes present, produced in the area. For crops which require cultivation or other care during the growing period, it is not unusual for an insured to allege that because of some insured cause, such as excessive rain, it was not possible to care for the crop in the proper way. While this may be true, consider what other farmers in the surrounding area accomplished under similar conditions. The following formula may be used to determine yields to use for an uninsured cause(s) of loss.

(1) When comparable acreage is not available on the insured's operation, but is available on those of other producers in the area, try to get permission to appraise the other producers' fields to use as a comparison. For example, the insured's acreage, which has been damaged by uninsured causes of loss. appraised at 60.0 bushels per-acre. You obtain permission to appraise the fields of two neighboring producers who have comparable acreage (comparable as described in subparagraph L (2) above) that has NOT been damaged by uninsured cause(s) of loss. The appraisals are as follows:

Producer No. 1: Field appraisals indicate 105.0 bushels per acre.

Producer No. 2: Field appraisals indicate 99.0 bushels per acre.

The average yield produced in the area would be 102.0 bushels per acre, as determined from the average of producer 1's and 2's appraisals. (105.0 + 99.0 ÷ 2 =102.0). Use the insured's 60.0 bushel per-acre appraisal compared against the 102.0 bushel average area yield as a basis to determine the per-acre amount of production the insured lost due to uninsured causes.

(2) When comparable acreage is not available in the area, the following may be used as a guide for determining a yield to use for uninsured cause(s):

Insureds' approved APH Yield: 90.0 bushels
Producer No. 1: "T" yield: 85.0 bushels
Producer No. 2: "T" yield: 83.0 bushels

Under normal conditions the AIP expects the crop to produce 86.0 bushels in the area (based on an average of the yields located on 3 farms of similar productivity in the area). The insured's production guarantee is 67.5 bushels per acre. The average yield expected in the area (with no insured or uninsured cause(s) of loss) is 86.0 bushels per acre and, therefore, would be used as the basis for uninsured cause(s) of loss.

N Judgment

Judgment is extremely important for establishing production lost due to uninsurable cause(s). A working knowledge of cultural practices and technical aspects of growing the crop in the area as well as scientifically sound research and publications from agricultural experts. Refer to definition of agricultural experts in Exhibit 1.

O Documentation

Document on a Special Report the circumstances involved, bearing in mind that any individual reviewing the claim generally knows nothing about the circumstance beyond the information conveyed on a Special Report.

P Insured's or Insured's Authorized Representative's Presence During Appraisals

If at all possible, the insured or the authorized representative should be present for appraisals involving uninsured cause(s) of loss. All aspects of the appraisal must be thoroughly discussed and explained to the insured. Mutual agreement is imperative if the insured is to be expected to sign the claim for indemnity and Special Report.

Q Other Causes of Loss Not Insured Against:

(1) Damage caused by water contained by any governmental, public, or private dam or reservoir project. Refer to subparagraph D above for more information.

(2) Chemical damage as listed in subparagraph R (2) below.

(3) Quarantine (e.g., Karnal Bunt in wheat or Plum Pox Virus in Peaches), unless the crop provisions or SPOIs insure loss of production (or trees) due to required destruction of the crop under a State or Federal quarantine.

(4) Any cause not specified as an insured cause in the crop policy or endorsement as limited by the County Actuarial Documents.

(5) For policies listing fire as an insured peril: Fire when ignition source of the fire was not due to a natural cause or natural disaster. Refer to FAD-35, dated September 3, 2004.

(6) Inability to obtain labor, seed, machinery, repairs or pesticides.

(7) Breakdown of machinery or failure of equipment due to mechanical defects.

(8) Damage by domestic animals or poultry.

(9) Neglect by the insured or by any person in the insured's household connected with the farming operation.

(10) Theft of crop.

R Partial Investigating Guide

Use the following to help detect any failure to follow recognized good farming practices (uninsured cause(s) of loss).

(1) Livestock damage as indicated by tracks, leaves stripped from main stem stalk, main stem stalk severed, grain head absent, or ears separated from stalk. Percent of damage due to missing heads or ears can be determined as follows:

(a) Count missing heads or severed ear shanks and remaining heads or ears from a sample of 100 consecutive stalks.

(b) Divide the number of missing heads or ears by the determined original number of heads or ears to obtain the percent of damage.

(c) Subdivide the field if damage is limited to a specific area(s) or if damage is not uniform.

(2) Chemical damage caused by:

(a) Use of improper chemical;

(b) Residual (toxic) effect of chemicals used in the previous crop year(s) as a result of not following the label specifications and restrictions when the chemical was applied;

(c) Improper application (rates, methods, timeliness, label restrictions, etc.); and/or

(d) Chemical drift from spraying of adjoining field(s). This can be identified by an irregular pattern of damage showing leaf droppage or wilted, stunted, pale colored, dying, or dead plants.

(3) Failure to follow recognized good farming practices adapted to the area, which have been successfully carried out by other producers in the area, following recommendations of agricultural experts as defined in Exhibit 1. Some of these are:

(a) Seeding method, variety, timeliness, depth, and rate.

(b) Fertilization timing and rates.

(c) Row spacing.

(d) Cultivation timing and depth.

(e) Chemical application (application rate, appropriateness, method, and timeliness).

(f) Seed treatment and germination potential (not use of old or damaged seed).

(g) Irrigation rates, number of times irrigated, and time of irrigation for the soil type, crop, climatic conditions, and irrigation equipment.

122 CLAIMS FOR INDEMNITY INVOLVING SUSPECTED CONCEALMENT OR MISREPRESENTATION

If concealment or misrepresentation is suspected, do the following:

A Inspection/Documentation

(1) If the inspection is a result of the insured's notice of loss, make all field verifications and/or determinations necessary to complete a final inspection, but advise the insured that further assistance will be needed before the claim can be finalized. Record information from the field inspection on appropriate appraisal forms (if applicable) and any other necessary worksheets needed to complete a final inspection. The information from the field inspection may be recorded on a claim form or MPCI Non-Waiver Agreement, whichever the AIP prefers to use for this type of case. **If a claim form is used, the adjuster and the insured will NOT sign the claim form at this time**.

(2) **A copy of any form signed by insured and adjuster at this time should be provided to the insured (e.g., appraisal worksheets, MPCI Non-Waiver Agreement, etc., PRIOR to signatures, review all data with the insured.**

(3) If the inspection is a Growing Season Inspection or Pre-harvest Inspection, record the information as described in the PAR.'s 71 and 72.

B AIP's Review of Case. The AIP will review all forms and documentation completed as a result of the field inspection and will provide any further assistance necessary for additional follow-up. After final evaluation of the case, the AIP will handle in accordance with the instructions in Appendix IV of the Standard Reinsurance Agreement for reporting suspected misrepresentation, fraud, waste, and abuse.

SECTION 3 SPECIAL CLAIMS PROCEDURES

123 SUBROGATION - THIRD PARTY CAUSE OF LOSS

A General Information

The insurance contract does not cover loss from any cause which is due to neglect or wrongdoing of the insured, any member of the insured's household, tenants, sharecroppers, employees, nor uninsured damage caused by a third party. If the claim is paid, the insured's right to recovery will, at the AIP's option, belong to the AIP. If the AIP recovers more than the AIP paid the insured, plus the AIP expenses, the excess will be paid to the insured.

B If Only Part of a Loss is Due to a Third Party Not Connected with the Insured

(1) Inform the insured that if any settlement is made the full amount should be claimed with the third party so as not to discharge the third party of liability.

(2) Enter in the narrative of the claim or on a Special Report, the following:

(a) Cause of loss,

(b) Evidence available as to the person responsible,

(c) The name and address of responsible party, if available, and

(d) Information regarding settlement with responsible party.

(3) If the insured receives any compensation from another party for the loss, (excluding private hail insurance payments and payments covered by section 35 of the Basic Provisions) and the indemnity due under the crop policy plus the amount the insured receives from the other party exceeds the amount of the insured's actual loss, the indemnity will be reduced by the excess amount. If the indemnity has already been paid, the insured will be required to repay the excess amount, not to exceed the amount of indemnity. The total amount of the actual loss is the difference between the value of the insured crop before and after the loss, based on the insured's production records and the highest price election or amount of insurance available for the crop.

124 AIP MEDIATION AND ARBITRATION

No award or settlement determined in mediation (mediation only applicable to crop/policies under the 2005 Basic Provisions) or arbitration process can exceed the amount of liability established or which should have been established under the policy, except for interest awarded.

A Mediation

If the insured and the AIP fail to agree on any determination made by the AIP (except for good farming practices or any other determination made by FCIC or any claim where FCIC is directly involved in the claim process or directs the AIP in the resolution of the claim), the disagreement may be resolved through mediation with the AIP. All agreements reached through settlement must be in writing and contain at a minimum a statement of the issues in dispute and the amount of the settlement. To resolve any dispute through mediation, the insured and AIP must both:

(1) Agree to mediate the dispute;

(2) Agree on a mediator; and

(3) Be present, or have a designated representative who has authority to settle the case present, at the mediation.

B Arbitration

(1) If resolution cannot be reached through mediation, or the insured and the AIP do not agree to mediation, the disagreement must be resolved through arbitration in

accordance with the rules of the American Arbitration Association (AAA), except for good farming practices or any other determination made by FCIC or any claim where FCIC is directly involved in the claim process or directs the AIP in the resolution of the claim.

(2) The arbitrator must provide the insured and the AIP a written statement describing the issues in dispute, the factual findings, the determinations, the amount and basis for any award and breakdown by claim for any award. The statement must also include any amounts awarded for interest. Failure of the arbitrator to provide such written statement will result in the nullification of all determinations of the arbitrator. All agreements reached through settlement must be in writing and contain at a minimum a statement of the issues in dispute and the amount of the settlement.

(3) Any decision rendered in arbitration is binding on the insured and the AIP unless judicial review is sought in accordance with PAR. 143 B. Notwithstanding any provision in the rules of the AAA, the insured and the AIP have the right to judicial review of any decision rendered in arbitration.

C Mediators or Arbitrators Must Be Disinterested Third Parties

The mediator or arbitrator must not have a familial, financial, or other business relationship to the insured or AIP, or to the agent or adjuster of the AIP's.

D Time limits

Regardless of whether mediation is elected:

(1) The initiation of arbitration proceedings must occur within one year of the date the AIP denied the insured's claim or rendered the determination with which the insured disagrees, whichever is later;

(2) If the insured fails to initiate arbitration in accordance with (1) above, and complete the process, the insured will not be able to resolve the dispute through judicial review;

(3) If arbitration has been initiated in accordance with (1) above and completed, and judicial review is sought, suit must be filed not later than one year after the date the arbitration decision was rendered; and

(4) In any suit, if the dispute in any way involves a policy or procedure interpretation, an interpretation must be obtained from FCIC as stated in PAR. 142.

***

125 CLAIMS INVOLVING FIRE DAMAGE

A General Information

(1) Fire damage must be due to an insurable cause of loss. To be an insurable cause, the fire must be due to a naturally occurring event.

(2) The insured must report and document the cause of loss. The AIP must determine whether the loss is insurable. If the AIP determines the cause of loss is insurable, damage due to the fire is covered.

(3) When the AIP verifies the insured's documentation of the fire, the AIP must verify that the documentation establishes the ignition source of the fire was due to a natural cause or natural disaster (refer to FAD-35, dated 9/3/2004 and FAD-60, dated November 1, 2006), and whether the fire damaged or destroyed the insured crop WITHIN THE INSURANCE PERIOD.

(4) Any damage resulting from fire when the insured cannot establish that the ignition source of the fire was due to a natural cause or natural disaster is uninsurable.

(5) **Tobacco Fire Damage in the Barn.**

(a) General Information.

Fire, flue or air- cured tobacco are recognized cultural practices used to cure tobacco.

1 **Fire cured tobacco** is cured with the use of man-made controlled smoldering hardwood fires built on the barn floor. However, even with good management practices, an unavoidable naturally occurring insured peril (e.g., hurricane, tornado, or other abnormally excessive winds) can cause the smoldering fires to uncontrollably ignite unintended areas of the barn (e.g., timbers) that quickly spreads and damages or destroys the tobacco in the barn.

2 **Flue cured tobacco** is cured in a closed building with furnace driven heat directed from flues or pipes that extend from a furnace into the barn. Lightening is an example of a naturally occurring insured peril that could cause a barn fire that could fire-damage the tobacco However, fire-damage is NOT covered due to a malfunctioning furnace, unless the malfunction is directly due to a naturally occurring event.

3 **Air-cured tobacco** is cured hanging from rafters in the barn with sides that open to allow air to freely circulate to cure the tobacco leaves. This curing process is the longest and most natural. However, for dark-air cured tobacco, when the air is very humid (i.e., during the night), producers may have to heat the barn with smokeless gas burners (pods) to avoid tobacco rot and to accelerate the curing process. Lightening or excessive winds are examples of naturally occurring insured perils that could cause a barn fire to unavoidably spread and damage or destroy the tobacco in the barn.

(b) Consistent with FAD-080, in the case of tobacco, (and specifically including fire cured tobacco) fire damage to the curing tobacco can be covered **IF** the insured can establish, with verifiable documentation, that the fire igniting the curing tobacco **WAS** caused**:**

1 By a naturally occurring unavoidable insured peril, and

2 In no way was due negligence, mismanagement or wrongdoing by the insured or member of the insured's family or household, insured's tenants, or employees.

(c) Verifiable documentation includes, but is not limited to, the following:

Verifiable documentation must include at a minimum, item 1 and item 2 or 3:

1 Local weather information collected by sources whose business it is to record and study the weather including but not limited to local weather reporting stations of the National Weather Service or documented local news reports, newspapers, television news reports, etc. that clearly establishes there was a hurricane, tornado, abnormally excessive winds, earthquake or other naturally occurring insured peril in the area;

2 If applicable, a report from Property and Casualty Insurance Company who paid the fire claim on the barn stating there was no arson or malfeasance on the insured's part; and/or

3 Reports from the local fire department and/or law enforcement agency indicating the cause of the fire was due to a natural event.

(6) Wildfires that are not due to a naturally occurring event, such as lightning, are not insurable. Therefore, wildfires started by arson, burning of trash, third parties, or undetermined causes are not insurable causes of loss. However, in accordance with FAD-080, "This does not mean that losses as a result of fires that started as arson, or other man-made causes can never be covered. It is possible that fire experts may be able to establish that an arson or other man-made fire can eventually become a natural disaster because naturally occurring events, such as excessive wind or drought conditions, may cause the fire to spread much farther than it would without such naturally occurring events. If the fire experts determine that at some geographical point, a fire started by arson can be considered a naturally occurring fire, then those losses in the area where the expert has determined the ignition source of the fire is considered naturally occurring would be covered. However, those losses in the area where the ignition source of the fire remains attributable to arson or other man-made causes cannot be covered."

(7) When the AIP establishes to their satisfaction that the fire damage to the insured crop was from a naturally occurring event that took place within the insurance period, the adjuster must establish whether or not the insured has other fire insurance ON THE CROP IN THE FIELD (on the tobacco in the barn if tobacco is in the barn); and whether fire has been excluded from the MPCI policy.

(8) The following subparagraphs provide instructions on how to handle when: (1) there is other fire coverage and fire coverage from the MPCI policy has not been excluded (double fire coverage), (2) when there is other fire coverage but fire coverage has been excluded from the MPCI policy, and (3) when there is no other fire coverage.

B No Other Fire Insurance

If the insured does NOT have other fire insurance, prepare a claim and state in the narrative that there is no other insurance. The claim is worked on a unit basis. When only a portion of the unit acreage is destroyed by fire and the harvested/appraised

production exceeds the unit guarantee, ALL OF THE FOLLOWING INSTRUCTIONS MAY BE DISREGARDED.

C Other Fire Insurance but Hail and Fire Excluded

If there is other fire insurance and hail and fire coverage has been excluded from the MPCI policy, follow the instructions given in PAR. 22.

D Other Fire Insurance and MPCI Fire Coverage (Double-Fire Coverage)

If the insured has other fire insurance and MPCI fire coverage:

(1) The AIP will be liable only for loss due to fire for the smaller of, the amount:

(a) of indemnity computed, or

(b) by which the loss from fire exceeds the indemnity paid or payable under the other insurance. The amount of loss from fire is the difference between the fair market value of the production of the insured crop on the unit involved BEFORE AND AFTER the fire.

(2) Prepare documentation on a Special Report in the following manner:

(a) Name and address of other insurance company and the name of their adjuster.

(b) The other insurance policy number.

(c) The applicant's issue date and the termination date of the other policy.

(d) Whether the loss was total or partial (all or part of the unit).

(e) Divide the determined acreage for the unit by the total acreage for all units involved and round the resulting factor to three decimal places.

1 Multiply the amount of fire coverage by this factor.

2 The result thus obtained will be used as the amount of fire coverage applicable to the unit.

(f) The amount of indemnity paid or payable to the insured by the other insurer with respect to:

1 the entire loss, and

2 that part of the loss applicable to the unit in question.

(g) The quantity of the crop (expressed in bushels, tons, pounds, etc.) from the unit damaged or destroyed by fire. Include:

1 The fair market VALUE per unit of measure (e.g., pounds, bushel, etc.) AND the total value on the date of the fire BEFORE fire damage.

2 The fair market VALUE per unit of measure (e.g., pounds, bushel, etc.) (if any) on the date of the fire AFTER fire damage from the "Value" column in the Harvested Production portion of the claim form.

(h) If the crop from two or more units was damaged or destroyed by the same fire, show the total unit of measure (e.g., pounds, bushel, etc.) and value and the bushels and value applicable to the unit for which the loss is being adjusted.

(i) Indicate if an agreement with the other insurance adjuster has been reached as to the quantity and value per unit of production destroyed. If there is disagreement, explain what caused the difference and how the quantity and value of the crop destroyed were determined.

(j) A statement of all known facts as to how the fire originated (including location of the field(s)), and if the fire resulted from the act of any person, the name and address of such person, and the name and address of person(s) having knowledge of the origin of the fire.

(k) Damage from fire is only covered if the fire is the result of an act of nature. If it is found that fire was NOT caused by an act of nature, follow the instructions for uninsured causes of damage.

E Claim Calculation Examples For Fire Claims (Double Coverage) (Hail/Fire Exclusion Not In Effect)

EXAMPLE 1- Example where MPCI payable indemnity is smaller than indemnity paid or payable under other insurance.

Assume:

1,425# per-acre guarantee	Tobacco sold 20,174# X $2.04 = $41,155;
15.15 acres in unit	Tobacco lost in fire 15,840# (Fair Market Value (FMV) $2.04/POUND)
$1.62 price election (for CAT coverage)	Amount paid by other insurance $20,899

COMMON CROP INSURANCE POLICY 05-BR (BASIC PROVISIONS) SECTION 22 (b) (1) (2) and (c):
"If you (insured) have other insurance, whether valid or not, against damage to the insured crop by fire during the insurance period, and you (insured) have not excluded coverage for fire from the policy, we (AIP) will be liable for loss due to fire only for the smaller of:"

"(1) The amount of indemnity determined pursuant to this policy without regard to any other such insurance; or"	"(2) The amount by which the loss from fire is determined to exceed the indemnity paid or payable under such other insurance. (c) For the purpose of subsection (b) of this section, the amount of loss from fire will be the difference between the fair market value of the production of the insured crop on the unit involved before the fire and after the fire, as determined from appraisals made by us (AIP)."
***TOBACCO CROP PROVISIONS, (10-071) SECTION 12. "(a) . . .on a unit basis. (1) . . (2) . (b) In the event of loss or damage covered by this policy, . . . : (1) Multiplying the number of insured acres by your applicable production guarantee (per acre); (2) Multiplying the result of section 12(b)(1) by your price election; (3) Multiplying the total production to count determined in section 12 (c) by your price election; (4) Subtracting the result of section 12(b)(3) from the result of section 12 (b)2); and (5) Multiplying the result of section 12(b)(4) by your share.	FMV of tobacco before the fire 20,174 # sold at tob. market $41,155 15,840 # lost in fire @$2.04 +$32,314 Total FMV of tob. before fire = $73,469
(1) 15.15 acres X 1425 lbs. (per-acre guarantee) 21,589 lbs. unit guar.	FMV of tobacco after the fire 20,174 # sold at tob. market = $41,155 15,840 # lost in fire @$0.00 -$ 0 Total FMV of tob. after fire = $41,155
(2) 21,589 lbs. (unit guarantee) -20,174 lbs. sold at tobacco market (PTC) 1,415 lbs. Production loss	Amount of loss from fire Total FMV of tob. before fire $73,469 Total FMV of tob. after fire -$41,155 Amount of loss from fire = $32,314
(3) 1,415 lbs. Production loss X $1.62 price election* $2,292 dollar loss before share *For Income Protection, CRC, or RA, or similar types of revenue insurance, the price election will be the projected price (base price for CRC).	Amount of loss from fire exceeding the indemnity paid from other insurance Amount of loss from fire $32,314 Amount other insurance paid -$20,899 Amount of loss exceeding = $11,415
(4) $2,292 dollar loss before share X 1.000 share $2,292 dollar loss after share	THE AIP IS LIABLE FOR THE LESSER OF THE TWO INDEMNITY CALCULATIONS WHICH IS $2,292.

The net production to be entered on the claim would be 20,174 lbs. (before share).

EXAMPLE 2 - Example where indemnity for fire loss from other insurance company is smaller than indemnity payable under crop insurance

Assume: 1,425# per-acre guarantee
15.15 acres in unit
1.62 price election (for CAT coverage)

Tobacco sold 5,000# X $2.04 = $10,200;
Tobacco lost in fire 18,000# (Fair Market Value (FMV) $2.04/POUND)
Amount paid by other insurance $26,616.

COMMON CROP INSURANCE POLICY 05-BR (BASIC PROVISIONS) SECTION 22 (b) (1) (2) and (c):
"If you (insured) have other insurance, whether valid or not, against damage to the insured crop by fire during the insurance period, and you (insured) have not excluded coverage for fire from the policy we (AIP) will be liable for loss due to fire only for the smaller of:"

"(1) The amount of indemnity determined pursuant to this policy without regard to any other such insurance; or"	"(2) The amount by which the loss from fire is determined to exceed the indemnity paid or payable under such other insurance. For the purpose of subsection (b) of this section, the amount of loss from fire will be the difference between the fair market value of the production of the insured crop on the unit involved before the fire and after the fire, as determined from appraisals made by us (AIP)."
***TOBACCO CROP PROVISIONS, (10-071) SECTION 12. (1) Multiplying the number of insured acres by your applicable production guarantee (per acre); (2) Multiplying the result of section 12(b)(1) by your price election; (3) Multiplying the total production to count determined in section 12 (c) by your price election; (4) Subtracting the result of section 12(b)(3) from the result of section 12 (b)2); and (5) Multiplying the result of section 12(b)(4) by your share.	FMV of tobacco before the fire 5,000 # sold at tob. market $10,200 18,000 # lost in fire @$2.04 + $36,720 Total FMV of tob. before fire = $46,920
(1) 15.15 acres X 1425 lbs. (per-acre guarantee) 21,589 lbs. unit guar.	FMV of tobacco after the fire 5,000 # sold at tob. market = $10,200 18,000 # lost in fire @$0.00 - $ 0 Total FMV of tob. after fire = $10,200
(2) 21,589 lbs. (unit guarantee) - 5.000 lbs. (production to count) 16,589lbs. production loss	Amount of loss from fire Total FMV of tob. before fire $46,920 Total FMV of tob. after fire - $10,200 Amount of loss from fire = $36,720
(3) 16,589 lbs. production loss X $1.62 price election * $26,874 dollar loss before share *For Income Protection, CRC, or RA, or similar types of revenue insurance, the price election will be the projected price (base price for CRC).	Amount of loss from fire exceeding the indemnity paid from other insurance Amount of loss from fire $36,720 Amount other insurance paid - $26,616 Amount of loss exceeding = $10,104
(4) $26,874 dollar loss before share X 1.000 share $26,874 dollar loss after share	THE AIP IS LIABLE FOR THE LESSER OF THE TWO INDEMNITY CALCULATIONS WHICH IS $10,104.

The net production to be entered on the claim would be 15,352 lbs. (before share).

Determine the net production to count as follows:
(1) $10,104 (indemnity payable) ÷ by 1.000 share and $1.62 price election =6,237 lbs. (unit loss).
(2) 21,589 lbs. (unit guarantee) - 5,000 lbs. (production to count) =16,589 lbs. (production loss)
16,589 lbs. (production loss) - 6,237 lbs. (unit loss) =10,352 lbs. (production to count).
Make a 2-line entry on the claim form:

Line 1: 5,000 lbs. (production to count).
Line 2: 10,352 lbs. (production to count)
15,352 lbs. (total production to count)

Indemnity Due: 21,589 lbs.-15,352 lbs. = 6,237 lbs. X $1.62 =$10,104.

EXAMPLE 3: CLAIM CALCULATION WHEN THERE IS ANOTHER CAUSE OF LOSS BESIDES FIRE AND THE LOSS FROM FIRE IS LESS THAN THE AMOUNT PAID BY OTHER INSURER

Step 1

Calculate the claim as if there was no fire loss.

For example:

Guarantee

	Acres	Stage	Guar.	Line Guar.
Line 1	267.4	H	42.8	11444.7
Line 2	11.6	UH	42.8	496.5
				11941.2 Unit Guar.

Production

11201.6 ÷ 267.4 = 41.9 bu. (Average from harvested acreage.)

11235.3 X .997 (FM factor) = 11201.6 **(Actual Harvested Production)**
11.6 acres X 41.9 bu. = 486. 0 **(Additional production had fire not occurred)**
11687.6 **(Production to Count)**

11941.2 **(Unit Guar.)**
−11687.6 **(Production to Count)**
253.6 Bu. Loss X $2.60 Price Election = $659.36 X .667 share = $439.79 **(Drought Indemnity)**

Step 2

Calculate maximum amount payable for fire.

Loss from fire - 11.6 X 41.9 = 486.0 X $3.77 (Fair Market Value) =$1832.22
Paid by other insurer (for unit) = −2229.00
Amount payable for fire $0.00

Step 3

Enter 41.9 bushels per acre (486.0 ÷ 11.6 acres) in the column for uninsured causes (column M) of the Production Worksheet on the line for the 11.6 unharvested acres.

Explain in the narrative of the claim that the line showing the uninsured cause appraisal is due to double-fire coverage and to see attached for calculations and explanations.

EXAMPLE 4 - CLAIM CALCULATION WHEN THERE IS ANOTHER CAUSE OF LOSS BESIDES FIRE AND THE LOSS FROM FIRE EXCEEDS THE AMOUNT PAID BY OTHER INSURER.

Using EXAMPLE 3 and assuming total amount for unit paid by other insurer to be $1487.

Step 1

Same as step 1 in EXAMPLE 3 to arrive at the indemnity payable for drought.

Step 2

Calculate maximum amount payable for fire.

Loss from fire 11.6 X 41.9 = 486.0 X $3.77 (Fair Market Value)	= $1832.22
Paid by other insurer (for unit)	= -$1487.00
	$ 345.22
	(FIRE INDEM.)

$ 439.79 payable for drought (from Example 3, step 1)
+$ 345.22 payable for fire
$ 785.01 total indemnity

Step 3

Calculate amount of production to be entered on the Production Worksheet (claim form). (Work backward from the total indemnity payable).

$785.01 (total indemnity) ÷ .667 share = $1176.93 ÷ $2.60 (price election) = 452.7 commodity loss

(a) 11941.2 (guarantee)
- 452.7 (commodity loss)
11488.5 (production to count)

(b) 11488.5 (production to count)
-11201.6 (actual harvested sold production)
286.9 (production to count for the 11.6 unharvested acres 286.9 ÷ 11.6 = 24.7 bu. per acre X 11.6 acres will equal 286.5 PTC instead of 286.9)

(c) 11941.2 (guarantee)
-11488.5 (production to count)
452.7 (bu. commodity loss)

Step 4

In Section I, column J of the Production Worksheet, on the line for the unharvested 11.6 acres, enter 24.7 (the per acre bu. appraisal for the 11.6 unharvested acres- refer to Step 3 (b)). In section II, column I of the Production Worksheet, the actual harvested sold production of 11201.6 bu. would be entered.

Total production to count = 11488.1 (11201.6 + 286.5)
11941.2 (guarantee) - 11488.1 = 453.1 bu. commodity loss

(Because of rounding the commodity loss may not always come out exactly the same as product shown in Step 3 (c)).

EXAMPLE 4 - Step 4 (Continued)

453.1 (commodity loss) X $2.60 (price election) X .667 (share) = $785.77 total indemnity (rounded to nearest dollar)

Explain in the narrative of the claim that the line showing the uninsured cause appraisal is due to double-fire coverage, and to see attached for calculations and explanations.

126 COMMINGLED PRODUCTION

This procedure applies to commingled production in storage structures or conveyances used to transport the harvest production. It also applies to sold production shown on settlement sheets that has not been or cannot be separated by unit.

A Different Types of Commingled Production

(1) Harvested production from insured acreage commingled with harvested production from uninsured acreage;

(2) Harvested production from two or more units is commingled;

(3) Harvested production from more than one crop year is commingled; or

(4) Harvested production from two or more practices/types within the same unit that have separate APH yields is commingled.

B Separated Commingled Production

If the AIP is satisfied the insured has complied with PAR. 105 instructions for the method selected by the insured to separate commingled production stored within the same storage structure or within the same truck load (or other conveyance; refer to definition in Exhibit 1), the following procedures do not apply.

C Unsatisfactory Records or No Records

This procedure does not apply when there are unacceptable records of multiple entities that have stored their production in the same storage structure with one or more uninsured entities. In this instance, there is no way of applying the following procedures since uninsured producers do not have liability. Therefore, because there was were no acceptable records to separate the production, the insureds failed to prove their losses and the indemnities on these units must be denied.

When subparagraph B above does not apply and the insured does not have satisfactory records or no records are available, handle as instructed below:

(Satisfactory records would include weighed production as detailed in PAR. 104 and records of each weighed load of production sold or commercially stored, identified by unit.)

(1) **Production from insured and uninsured acreage**. Prepare the claim to show all production as being from the insured acreage. In the narrative section, explain

that the reported production is commingled production from insured and uninsured acreage.

(2) **Production from current and prior crop year**. Prepare the claim to show all production as being from the current crop year acreage. In the narrative section of the claim explain that the reported production is commingled from current crop year and prior crop year production.

(3) **Production from acreage of a reported unit and from acreage of an unreported unit.** If it is determined that the unreported unit and the reported units were optional units, then allocate the amount of production from the commingled reported unit and unreported unit in accordance with (5) below. Once the amount of production for the unreported unit has been determined, follow the procedures for allocating the harvested allocated production from the unreported unit to the reported units, as stated in PAR. 127 below.

(4) **Production from two or more optional units**. If production from two or more separate optional units is commingled, such commingling renders any such unit determination void. Any remaining optional units that were not commingled will retain their optional unit structure.

(a) Determine which optional units were commingled. If there were other optional units that were not commingled, combine only the commingled optional units into one optional unit. If ALL optional units were commingled, combine all optional units into applicable basic unit structure(s).

(b) The approved APH yields for each commingled unit are retained for the current crop year but will be processed on the acreage report and claim form (Production Worksheet) under one unit. The claim form will be prepared with separate lines representing the guarantees based on the approved yields for each of the units commingled.

(c) The CIH outlines the eligibility of commingled optional units for the next crop year.

(d) The revised APH form and revised acreage report must be approved or rejected by the AIP's approving official for these forms.

(5) **Commingled harvested production from basic units and or from different policies/counties.** The total commingled production will be allocated to each basic unit in proportion to the liability (do not include share) for the harvested insured acreage of the commingled units. Prepare separate claims for each basic unit that has been commingled. This may involve more than one policy; e.g., basic units from two different policies (policy for each county or policy for the landlord and tenant). Liability is hereafter called dollar coverage or coverage (cov.).

(a) Use the following formula to allocate production to each commingled basic unit in proportion to the dollar liability for the harvested insured acreage:

1 For each basic unit, multiply the per-acre dollar coverage for the insured acreage X the number of harvested acres = unit dollar

coverage for harvested acres (U Coverage.) (Refer to (b) below for dollar coverage calculation instructions.

2 Total the unit coverages for only harvested acreage from all commingled units to obtain the Total Commingled Unit Coverage (TCU Cov. for only harvested acres from all commingled units).

3 Divide the unit coverages for only the harvested acres by the TCU Cov. for only the harvested acres from all commingled units to obtain the Commingled Production (CP) Factor (four-place factor).

4 For each commingled unit: multiply the total harvested production (insured's and share holder's share) from all commingled units times the CP Factor to obtain the apportioned production for each commingled basic unit.

(b) Determine Per-acre Dollar Coverage, as follows:

1 For APH crops with insurance plan codes of 90: Alfalfa seed, almonds, avocados (FL), barley, buckwheat, canola, corn, cotton (AUP and ELS), cranberries, cultivated wild rice, dry beans, dry peas, flax, forage production, grain sorghum, Hawaii Tropical Fruit (bananas, coffee cherries, papaya), cherries, millet, mint, mustard, oats peaches, peanuts, popcorn, potatoes, rice, rye, safflowers, soybeans, sugar beets, sugarcane, sunflowers, processing sweet corn, sweet potatoes, tobacco (all crop codes), FM tomatoes, canning & processing tomatoes, and wheat:

a Approved APH yield X insured's coverage level (if certified seed potatoes with 125% acreage limitation or sweet potatoes with the 110T acreage limitation take the preceding result X Yield Conversion Factor.) = Per-acre Guarantee.

b Per-acre guarantee (X Guarantee Reduction Factor, if acreage late planted) X price election = Per-acre Coverage.

2 For these APH crops with insurance plan codes of 90 apples, blueberries, cabbage, AZ citrus fruit, all CA citrus crops (except navel oranges), dry beans, dry peas, figs, grapes, green peas, macadamia nuts, onions, pears, plums, potatoes, processing beans, prunes, stonefruit, table grapes, and walnuts.

For these APH crops: TX citrus fruit has plan codes 90 and 50.
For APH crop, CA citrus fruit (navel oranges), plan code 51.
For APH crop, forage production, plan codes 12 and 90.
For APH crop, peaches, plan codes 90 and 96.

a Yield X insured's coverage level X Option Historical Packout Factor (X Guarantee Reduction Factor, if acreage late planted) = Per-Acre Guarantee (all listed crops except cabbage and potatoes (certified seed).

b For cabbage (except processing) and potatoes (certified seed) with the 125 % acreage limitations:

Yield X insured's coverage level X Yield Conversion Factor = Per-Acre Guarantee.

c Per-acre guarantee X insured's price election = Per-acre Coverage.

3 For crops having dollar plan of insurance (plan code 50): Florida citrus, forage seeding, peppers, raisins, fresh market sweet corn, and fresh market tomatoes:

a The Reference Maximum Amount from the actuarial documents X the insured's coverage level (X the insured's elected price election factor for Florida Citrus only) = the Per-acre Dollar Amount of Insurance.

b Per-acre Dollar Amount of Insurance X price election = Per-acre Coverage.

4 For crops having fixed dollar amount of insurance (insurance plan code 51): Chile peppers or citrus:

a Actuarial document dollar amount X Guarantee Reduction Factor = Per-acre Dollar Amount of Insurance

b Per-acre Dollar Amount of Insurance = Per-acre Coverage.

5 For Dollar Amount of Insurance (Insurance plan code 46) California Avocados:

a Farmer Approved Average Revenue X insured's coverage level = Per-acre Dollar amount of Insurance.

b Per-acre Dollar Amount of Insurance = Per-acre Coverage.

6 For Dollar Amount of Insurance (insurance plan code 41) pecans:

a Approved average revenue per acre X insured's elected coverage level = Per-acre Dollar Amount of Insurance.

b Per-acre Dollar Amount of Insurance = Per-acre Coverage.

7 For crops having Yield Base Dollar Amount of Insurance (insurance plan code 55) hybrid seed corn and hybrid seed sorghum.

a County Yield from FCI-35 X insured coverage level – minimum payment (in bushels) = Yield.

b Yield X insured's elected price election (if late planted, X Guarantee Reduction Factor due to late planting) = Dollar per-acre Guarantee.

c Dollar per-acre Guarantee = Per-acre Coverage.

8 For crops having GRP (insurance plan code 12) and GRIP (insurance plan code 73):

a Must be ≥ 60% of the Maximum Protection per Acre and ≤ 100% of the Maximum Protection per Acre = Dollar Per-Acre Guarantee.

b Dollar Per-Acre Guarantee = Per-acre Coverage.

9 For Income Protection (insurance plan code 42) and Indexed Income Protection (insurance plan code 45) crops:

a Approved APH Yield X insured's coverage level percent) X insured's price election (X Guarantee Reduction Factor, if acreage is late planted) = Per-acre Dollar Amount of Insurance.

b Per-acre Dollar Amount of Insurance = Per-acre Coverage.

10 For Revenue Assurance (insurance plan code 25) crops:

a Guarantee Per-acre (X Guarantee Reduction Factor if acreage late planted) = Per-acre Dollar Amount of Insurance.

b Per-acre Dollar Amount of Insurance = Per-acre Coverage.

11 For Crop Revenue Coverage (plan code 44) crops:

a Approved APH Yield X insured's coverage level (X Guarantee Reduction Factor if acreage late planted) = Per-acre Guarantee.

b Per-acre Guarantee X insured's price election (base price) = Per-acre Coverage.

EXAMPLE OF COMMINGLED PRODUCTION FROM THREE BASIC UNITS FROM DIFFERENT POLICIES

Step 1: Unit 00100: 10.0 harvested acres X 69.0 bu. (harvest guarantee) X $2.00 (PE) = $1380 (Line Cov.)

15.0 harvested acres X 78.0 (harvest Guar.) X $2.00 (PE) = $2340. (Line Cov.)

$1380 (Line Cov.) + $2340 (Line Cov.) = $3720 (U Cov. for only the harvested acres in the unit)

Unit 00200: 20.0 acres harvested X 104.0 bu. (harvest Guar.) X $2.00 (PE) = $4160 (U Cov. for only the harvested acres in the unit)

Unit 00300: 25.0 harvested acres X 96.0 bu. (harvest Guar.) = X $2.00 (PE) = $4800 (U Cov. for only the harvested acres in the unit)

Step 2: $3720 (00100 U Cov.) + $4160 (00200 U Cov.) + $4800 (00300 U Cov.) = $12,680 (TCU Cov. for only the harvested acres from all commingled units.)

Step 3: Unit 00100: $3720 (U Cov. for only the harvested acres in the unit) ÷ $12,680 (TCU Cov. for only the harvested acres from all commingled units) = .2934 (CP Factor)

Unit 00200: $4160 (U Cov. for only the harvested acres in the unit) ÷ $12,680 (TCU Cov. for only the harvested acres from all commingled units) = .3281 (CP Factor)

Unit 00300: $4800 (U Cov. for only the harvested acres in the unit) ÷ $12,680 (TCU Cov. for only the harvested acres from all commingled units) = .3785 (CP Factor)

Step 4: Unit 00100: 5000.0 bu. (TOTAL of only harvested Prod. from all commingled units) X .2934 (CP Factor)
= 1467.0 bu. to be allocated to unit 00100.

Unit 00200: 5000.0 bu. (TOTAL of only harvested Prod. from all commingled units) X .3281 (CP Factor)
= 1640.5 bu. to be allocated to unit 00200.

Unit 00300: 5000.0 bu. (TOTAL of only harvested Prod. from all commingled units) X .3785 (CP Factor)
= 1892.5 bu. to be allocated to unit 00300.

(c) Completing the Claim Form for Basic Units that Are Commingled

:

1 Enter "Commingled Production" in the heading.

2 Prepare Parts I and II in the usual manner, except for farm-stored production; enter the allocated gross production for the unit in the column for gross production.

3 Enter the following in the narrative of each commingled unit claim or on a Special Report attached to the claim form:

a Total the harvested production from all commingled basic units and the calculations used to arrive at the allocated production for each commingled unit.

b Explain the reasons given by the insured for the commingling of production.

(6) **Commingled production from different practices/types having separate APH yields within a unit:** Prorate commingled production which cannot be separated with satisfactory records to each practice/type in proportion to the liability on the harvested acreage for each practice/type. (Separate line entries

are required on the claim form in the harvest production part of the claim. (See applicable crop handbook.) **Refer to example below for formula to prorate production in proportion to the unit liability**.

(a) EXAMPLE: Unit 00100 having practices with different APHs

Step 1: LINE 1: 10 acres of harvested production (003 dryland practice) X 45.0 bu. (harvest Guar.) = 450.0 bu. (line guarantee (Line Guar.))

LINE 2: 15.0 acres of harvested production (002 irrigated practice) X 80.0 bu. (harvest guarantee) = 1,200.0 bu. (Line Guar.)

Step 2: 450.0 bu. (Line 1 Guar.) + 1200.0 bu. (Line 2 Guar.) = 1650.0 bu. unit guarantee (U Guar. for the harvested production from more than one practice having different APHs commingled for the unit)

Step 3: 450.0 bu. (Line 1 Guar.) ÷1650.0 bu. (U Guar. for the harvested production from more than one practice having different APHs commingled for the unit) = .2727 Commingled Production (CP) Factor.

1200.0 bu. (Line 2 Guar.) ÷ 1650.0 bu. (U Guar. for the harvested production from more than one practice having different APHs commingled for the unit) = .7273 CP Factor.

Step 4 1500.0 bu. (TOTAL the harvested production for practices commingled) X .2727 (Line 1 CP factor) = 409.0 harvested bu. to be allocated for line 1 (003 dryland practice).

1500.0 (TOTAL harvested prod.) X .7273 (Line 2 CP factor) = 1091.0 harvested bu. to be allocated for line 2 (002 irrigated practice).

(b) Completing the Claim Form

:

1 Enter "Commingled Production" in the heading.

2 Prepare Parts I and II in the usual manner, except for farm-stored production; enter the allocated gross production for each practices/types on separate lines in Part II of the claim form as instructed in the individual crop handbooks.

3 Enter the following in the narrative of each commingled unit claim or on a Special Report attached to the claim form:

a Total the harvested production from all commingled practices/types and the calculations used to arrive at the allocated production for each commingled unit.

b Explain the reasons given by the insured for the commingling of production.

(7) Production from the landlord's and tenant's share of the crop unit that is stored in the same structure is not considered commingled production. Refer to PAR. 84 C.

127 UNREPORTED UNITS

A General Instructions

(1) If the insured fails to report all units (acreage that could have been established as a separate unit), the insured's share of production from the acreage in the unreported unit will be allocated to the acreage in the REPORTED unit(s) in proportion to the liability (do not include share) on the insured acreage on each reported unit.

(2) If an insured reports zero acres for a unit and it is determined that there are insurable acres, it will be considered to be an unreported unit. If an insured reports uninsured acreage on the acreage report that is determined to have been a unit of insurable acreage, the unreported unit procedure will apply.

(3) No production from unreported units will be allocated to prevented planting acreage or otherwise affect any prevented planting payment. The calculation examples in subparagraph D below show how the production is proportioned to the liability. No premium will be charged for the acreage on the unreported unit(s).

(4) Production from the unreported unit(s) is allocated to reported units of the same crop in the SAME county, unless the "county" definition in the policy/endorsement or a Written Agreement specifies otherwise.

(5) Production from the unreported unit(s) can only be established from harvested and/or appraised production. If no production has been harvested and/or appraised from an unreported insurable unit and this unit is destroyed prior to the adjuster's knowledge of its existence, potential production cannot be assessed for this unreported unit. At the time an unreported unit is discovered, appraise unreported unit acreage any time it is suspected or known that the crop will not be harvested or production will be harvested and stored in such a manner that such production cannot be established at a later date.

B Inform the Insured

Advise the insured that production from the unreported unit WILL NOT be counted for APH purposes for the reported unit even though it will be apportioned to it; however, the unreported unit production will be counted for APH purposes for the unreported unit.

C When Claim Can Be Finalized. Claims CANNOT be finalized until the production (preferably harvested rather than appraised) from unreported units is established for allocation.

D Calculation Instructions

Calculate the production from the unreported acreage unit, as follows:

(1) Before calculating production as instructed in (2) or (3) below:

If there is an unreported unit of an insurable type that has a different unit of measure (harvested with that unit of measure) than the reported unit, convert the harvested production from the unreported unit to the unit of measure of the reported unit types. For example: There is an unreported unit of corn silage type (harvested silage production) and reported units of corn grain type (both types insurable in the county). In this case, follow the calculation instructions in Section 10 D (4) of the CIH for converting harvested corn silage production unit of measure (tons) to corn grain unit of measure (bushels).

(2) If only one unit is reported, the insured's share of the net production[1/], from the unreported unit divided by the insured's share of the reported unit will be the amount allocated to the reported unit.

[1/] Gross production, adjusted for all applicable adjustments; e.g., moisture, test weight (if farm-stored), FM, and quality if applicable.

Example: An unreported unit consisting of 50 acres with 1500.0 bushels of harvested production was found when completing a final loss inspection. It was determined that the insured had a 50 percent share in the unreported unit. The insured's share in the reported unit was 75 percent.

Step 1 - 1500.0 bu. X .500 = 750.0 bu. share of unreported unit.

Step 2 - 750.0 bu. (insured's production share of unreported unit) ÷ .750 (share percent of reported unit) = 1000.0 bu. to be allocated to the reported unit.

Although the allocated production to the reported unit was increased in this example, it will be reduced to the correct share of production (750.0 bushels) when the indemnity amount is multiplied by the reported unit share (.750).

(3) If more than one unit was reported, calculate the allocation of production from the unreported unit to each reported unit in proportion to the liability on the insured acreage as follows (liability as stated in (1) above is called coverage.):

(a) For each reported unit, calculate the coverage for the insured acreage (insured acres X per-acre guarantee X price election (PE) = Unit Cov.).

(b) Total the unit coverage for the insured acreage on all reported units to obtain the contract Cov.

(c) Divide the Unit Cov. by the contract Cov. to obtain the unit Cov. Factor (four-place factor).

(d) Multiply the insured's share of unreported unit(s) production by the Unit Cov. Factor and divide the result by the share on the reported unit to obtain the apportioned unreported production for each reported unit.

Example: Unreported acreage of 200.0 acres with 6000.0 bushels of harvested production was found when completing a final loss inspection. It was determined that the insured had a 50% share in this acreage. The insured's share of production to be allocated would be 3000.0 bu. Unit 00101 had 140.0 insured acres; unit 00102 had 100.0 insured acres; and unit 00200 had 200.0 insured acres.

Step 1: Unit 00101: 140.0 acres X 30.4 bu. guarantee X $2.00 (PE) = $8512 Unit Cov. for unit 00101

Unit 00102: 100.0 acres X 22.2 bu. guarantee X $2.00 (PE) = $4440 Unit Cov. for unit 00102

Unit 00200: 200.0 acres X 24.8 bu. guarantee X $2.00 (PE) = $9920 Unit Cov. for unit 00200

Step 2:

Unit 00101 Cov.	$8512
Unit 00102 Cov.	$4440
Unit 00200 Cov.	+ $9920
Contract Cov.	$22872

Step 3: $8512 ÷ $22872 = .3722 unit 00101 Coverage Factor
$4440 ÷ $22872 = .1941 unit 00102 Coverage Factor
$9920 ÷ $22872 = .4337 unit 00200 Coverage Factor

Step 4: 3000.0 bu. = insured's share from the unreported unit (6000.0 X .500 = 3000.0)

3000.0 bu. X .3722 = 1116.6 ÷ 1.000 = 1116.6 bu. to be allocated to unit 00101

3000.0 bu. X .1941 = 582.3 ÷ 1.000 = 582.3 bu. to be allocated to unit 00102

3000.0 bu. X .4337 = 1301.1 ÷ .500 = 2602.2 bu. to be allocated to unit 00200

The allocated production for unit 00200 was increased to 2602.2 because it will be reduced to the correct share of production (1301.1) when the indemnity amount is multiplied by the reported unit share (.500).

E Entering Allocated Production from Unreported Unit(s) on the Claim Form

(1) For Claims Having a Harvested (H) Stage and/or (P) (Destroyed without Consent) Stage:

Enter the apportioned net production[1/] on a separate line in the “Bu. Lbs. Cwt. or Tons” column. Identify this line as such by entering the words "Unreported Unit Production" in the “Length" and "Width, Depth, and Deduction” columns. If production is stored on the farm, enter net production in the “Bu. Lbs. Cwt. or Tons” column. Refer to (3) below for documentation requirements.

[1/] Gross production, adjusted for all applicable adjustments; e.g., moisture, test weight (if farm-stored), FM, and quality if applicable.

(2) For Claims Having ONLY an Unharvested (UH) Stage:

In the "Uninsured Causes" column, using only one line, enter a per-acre amount of production (total allocated production ÷ number of acres for the line) that will equal the total allocated production or come as close as possible to the total allocated production without exceeding it when the per-acre amount is multiplied by the acres on that line. If possible, choose a line that does not have an actual uninsured-cause appraisal in the "Uninsured Causes" column. However, if you must use a line that will have an actual uninsured-cause appraisal in the "Uninsured Causes" column, add the per-acre amount of net production [1/] calculated for the allocated production to the uninsured-cause appraisal. Refer to (5) below for documentation requirements.

EXAMPLE: On the claim form, the line selected to make the entry in the "Uninsured Causes" column showed 50.3 acres in the "Final Acres" column. 743.7 (Total Allocated Production) ÷ 50.3 acres = 14.785 bushels. This would be entered as 14.7 in the "Uninsured Causes" column) rather than 14.8 since 14.8 bushels x 50.3 acres = 744.4 bushels, which would exceed 743.7 bushels (the Total Allocated Production).

(3) For CRC, the Calculated Revenue is determined by multiplying the production to count by the Harvest Price. For RA, the value of the production to count is determined by multiplying the production to count by the applicable harvest price (i.e. , if a Fall Harvest Price Option is in effect the greater of, the projected harvest price or fall harvest price.

(4) Additional instructions for canola/rapeseed, small grain crops, safflowers, sunflowers, corn, grain sorghum, and soybeans for the 2010 crop year only, and for 2011 and succeeding crop years, these instructions will be applicable as the new PW is added to the crop LASH:

Enter the allocated net production in item 71 of the Production Worksheet as instructed in the Claim Form Entries and Completion Procedures for the applicable crop LASH.

(5) Document the following in the narrative of the claim or on a Special Report: (If a Special Report is used, attach a copy to each claim.)

(a) Actual production from the reported and unreported units. Identify the location of the unreported unit by legal description and field I.D. number;

(b) The calculations used to arrive at the production allocated to the reported unit(s); and

(c) If the "Uninsured Causes" column has been used for the unreported-unit production, identify which line was used; e.g., line 2. Also, if any actual uninsured-cause appraisal has been included with the allocated production in the "Uninsured Causes" column, separately identify the amount of each.

[1/] Gross production, adjusted for all applicable adjustments; e.g., moisture, test weight (if farm-stored), FM, and quality if applicable.

128 CLAIMS INVOLVING SEVERE INSECT, DISEASE, OR WEED INFESTATION

A General Information

(1) The first crop year damage resulting from severe insect, disease, or weed infestations (such as cheat grass) will generally be considered unavoidable if the insured was unaware of the conditions at planting time. However, if it is determined that the insured was (or should have been) aware of the infestation at planting time or later but did not follow appropriate recognized good farming practices, some or all of the loss will be considered an avoidable (uninsured) cause of loss. Failure to follow good farming practices might include not following recommended crop rotation or soil treatment practices. If a disease resistant variety exists for a disease that agriculture experts in the local area are recommending be planted, and the insured does not plant such a variety, the disease is considered to be an avoidable cause of loss, even in the first year.

(2) When the first crop year damage is considered unavoidable, unless otherwise stated in the crop provisions or SPOIs (e.g., Florida Fruit Trees), disease is not an insured cause of loss when the sole loss of production is due to the required destruction of the diseased crop (or, if applicable tree) by a Federal or State quarantine; i.e., the per-acre guarantee prior to required destruction is above the insurance guarantee. Refer to PAR. 121 Q (3).

B Inform Insured. Advise the insured that some or all of the damage due to the same cause in subsequent years on the same acreage will be considered avoidable (uninsured) unless recognized good farming practices have been followed. Suggest that the insured contact the local county extension office to obtain their recommendations for treating and eradicating the infestation.

C Documentation. Record the details of the case and identify the cause and name of weed, disease, or other pest in the narrative section of the claim or on a Special Report.

D Documenting Location of Infected Fields. Identify the infested field(s) on an aerial photomap and the claim or on a Special Report.

E Appraisal. Appraise and record loss of production from avoidable causes according to applicable procedure (Refer to PAR. 121).

129 AIRPLANE- OR BROADCAST-SEEDED BARLEY, OATS, RYE, OR WHEAT

A General Information. Insurance generally attaches at the time of seeding. The General Crop Insurance Policy or Basic Provisions provide that the contract will not cover any loss of production due to failure to follow recognized good farming practices.

B Protection for Airplane- or Broadcast-Seeded Barley, Oats, Rye, or Wheat

(1) Most SPOIs for most small grain crops state the following: Any fall planted acreage on which seed is spread onto the soil surface by any method (e.g., airplane or otherwise broadcast seeded) and is subsequently mechanically incorporated into the soil, will be insurable ONLY IF the insured requests insurance for the acreage within 72 hours after the final planting date or within 72 hours after the insured completed incorporating the seed in the late planting period, and the AIP agrees in writing that the acreage has an adequate stand to

produce the yield used to determine the insured's production guarantee. Insurance will attach to such acreage on the date the AIP determines an adequate stand exists.

(2) Subparagraph D below provides instructions for when the insured is prevented from mechanically incorporating the seed due to an insured cause of loss. Mechanical incorporation is required unless excepted by the county actuarial documents.

(3) All other insurability provisions of the contract are met.

This subparagraph is not applicable to an air seeder implement that applies the seed to the soil surface and incorporates it into rows in a single operation. Application of seed with an air seeder implement is considered planted and insurance would attach at that time.

C Improperly Prepared Seedbed

Failure to properly prepare the seed bed will be considered failure to follow recognized good farming practices, and when it results in a loss of potential production, it will necessitate an appraisal for uninsured causes on any subsequent claim.

D If Seed Not Mechanically Incorporated

If the insured did not mechanically incorporate (and lack of incorporation was not due to an insured cause of loss) the barley, oats, rye, or wheat seed into the soil and mechanical incorporation is not excepted in the county actuarial document, show such acreage in the "Remarks" section of the acreage report as uninsured. If the original acreage report showed such acreage as insurable acreage, prepare a revised acreage report to delete such acreage.

130 SEVERE WIND EROSION

A General Guidance

(1) In some geographical areas, emergency tillage to control wind erosion in order to conserve the soil and minimize further damage to planted crops is a recognized good farming practice. Such emergency tillage usually begins in strips, but under extreme conditions may progress to the point of solid tillage. Implements used for this purpose vary, although a chisel plow is preferred in many areas. In geographical areas where emergency tillage is a recognized good farming practice to control severe wind erosion, appraisals are NOT TO BE CHARGED as production to count for acreage insureds have tilled to control severe soil erosion when the AIP can document that such tillage was necessary.

(2) This procedure applies to the ACTUAL acreage of the crop being physically destroyed by the tillage process; i.e., this would not apply to acreage between tilled rows.

(3) Apply the following procedures when the crop is to be tilled to control severe wind erosion.

B Specific Instructions

(1) Replanting Payment Provisions

Crops WITH policy or endorsement provisions for replanting payments will be subject to their particular rules and regulations, including the requirement that the AIP must have the opportunity to inspect the acreage prior to destruction to determine eligibility for a replanting payment. Representative areas of the crop are to remain intact for appraisal purposes to verify the eligibility of the acreage for a replanting payment. This requirement can be waived by the AIP ONLY under extremely unusual conditions that necessitate solid-tilling prior to appraisal opportunity. Also refer to PAR.'s 64 and 65 or additional replanting information.

(2) Insureds' Notification Requirements

IN ALL CASES, insureds are to notify their AIP immediately of their intention to till acreage for the purpose of controlling soil erosion. If the urgency to till is such that AIP notification is impossible prior to such action, the efforts of the insured to provide immediate notification of the tillage undertaken will be considered in determining the insured's compliance with this requirement.

(a) 25 percent or less. If the insured intends to till 25 percent or less of the field or subfield, (accumulative rather than single event) the insured can immediately begin tilling upon notifying the agent of such intentions.

(b) More than 25 percent. If the insured intends to till more than 25 percent of a field or subfield, or finds that after tilling is started, more than 25 percent of a field or subfield needs to be tilled, the AIP must be notified immediately so that such acreage can be inspected prior to tilling. The AIP may waive this requirement for inspection prior to tilling ONLY under extremely unusual conditions that necessitate tilling prior to inspection opportunity; however, the AIP will make every attempt to give such cases priority attention to inspect the field(s) prior to solid tillage completion.

(3) Documentation of inspections

(a) Upon the receipt of notices involving tillage of more than 25% of the acreage in a field or subfield, adjusters are to make on-the-farm inspections as soon as possible. The AIP has the authority to expand this inspection requirement to include notices under 25 percent or to include all notices; i.e., 100 percent of notices inspected. For each inspection, document on a Special Report, the following:

1 The need for emergency tillage (to the extent tilled).

2 The amount and percent of acreage ACTUALLY tilled or to be ACTUALLY tilled in each field or subfield.

3 Whether the crop was ever initially planted.

4 Any uninsured causes.

5 A statement of the crop stand and condition (prior to tillage) as good, fair, poor, very poor, or destroyed.

6 General weather and moisture conditions.

7 Variability of crop within the subfield, field, and unit.

8 Other pertinent information needed to make future determination of any loss.

(b) If you have any reason to doubt the need for emergency tillage to the extent tilled (or to be tilled), then:

1 Prepare a crop appraisal; and

2 Support your documentation with recommendations from agricultural experts. Refer to Exhibit 1 for the definition of agricultural experts.

131 CORRECTED CLAIMS

A General Information

(1) Once a claim is processed, the claim cannot be corrected unless:

(a) One or more entries on the claim form is incorrect due to an incorrect factor, an incorrect appraisal amount due to an error in calculating the appraisal on the appraisal worksheet (e.g., an incorrect factor was used or error in calculation), an incorrect measurement of a storage structure that can be verified to be incorrect, the insured failed to report all of the production from the unit, not all of stated production was accounted for, under the provisions of the misreported information, current and/or prior year's claims would have to be corrected, etc.

(b) Entries of information that affect the indemnity were erroneously omitted; e.g., excess moisture percentage.

(c) A decision from an arbitration, appeal, or administrative review requires a corrected claim.

(d) Part or all of the claim is settled on appraised production and the insured later harvests the appraised production. Depending on the circumstances, the claim may or may not be corrected. Refer to PAR. 67 L for details; or

(e) Misreported information exceeded the 10% tolerance for over or under-reported liability that would affect an indemnity, prevented planting payment, or replant payment that was paid in a prior crop year. Refer to PAR. 21 C for information in misreported information tolerances.

(f) The insured submits the acreage measurement from the measurement service that was not available when the claim was finalized and there is a discrepancy between measurements service's measurement and the AIPs determined acres, and it is determined the measurement service's measurement is correct. The $250 tolerance as stated in B (2) below is applicable.

(g) The individual crop LASH specifies a corrected claim may be done for a specific situation.

(h) The value received for damaged production has been increased after the claim was settled (e.g., after claim was settled, the buyer decreased the discounts for the damaged production and reimbursed the insured producers the difference) and this would result in an overpayment of at least $250 for the policyholder's indemnity as described in subparagraph B (2) below.

(i) A basic unit structure is determined to be incorrect.

(2) Corrected claims cannot be made solely because the insured subsequently sells more or less production than was determined from measurements of production in a storage structure(s) at the time of final settlement of the claim, unless the dimensions of the structure or obstacle deductions (studs, vents, etc.) or other details or circumstances can be verified to be in error.

(3) Reprocessing claim information along with the proper codes to reduce or restore an indemnity or prevented planting payment due to first and second crop acreage is not considered a corrected claim for the purpose of this paragraph. This type of administrative action does not require a (claim) Production Worksheet to be completed. However, the claim information is processed through DAS with the proper codes to reduce or restore the indemnity or prevented planting payment, as applicable. Documentation of why the indemnity or preventing planting payment was required must be kept in the insured's loss file.

B When to Prepare

Prepare a corrected claim **only when you are authorized by your AIP** to do so, and in accordance with the following tolerances below. (For types of corrected claims for which dollar tolerance apply, AIPs are not required to correct claims that are below the dollar tolerances but they may if they wish to do so.) There is no time limit for when a corrected claim can be prepared. Even though the reason for the corrected claim is not discovered until the subsequent crop year(s), the corrected claim will be prepared if it is to be corrected in accordance with the procedures in PAR. 131.

(1) There are no dollar tolerances for preparing corrected claims due to items A (1) (c) above.

(2) When errors as stated in subparagraph A (1) (a), (b), (d) or (e) are discovered, a corrected claim will be prepared if the underpayment or overpayment is in excess of the FCIC-approved tolerance ($250). This tolerance applies on a policyholder basis (refer to the applicable RI or VI Insurance Standards Handbook for dollar-tolerance procedures for RI and VI products). The results of a review on multiple policies held by a single policyholder within a county will be combined to determine the applicability of the tolerance.

C Labeling Claim as "Corrected Claim." Write "CORRECTED CLAIM" in the heading on all copies of the claim and prepare it in accordance to the applicable crop handbook.

D Documentation

Document on a Special Report why the corrected claim was prepared. The insured and adjuster shall sign all documents prepared. If the insured refuses to sign, document the reason for the refusal on a Special Report. Submit the corrected claim and Special

Report to the person or office designated by the AIP. Document on the Special Report at least the following:

(1) The circumstance(s) which resulted in erroneous data (production, acreage, share, etc.) on the original claim.

(2) Insured's explanation for reporting incorrectly.

(3) The name of the person finding the error and the manner used to establish the correct information. Determine if the insured was deliberately withholding or concealing production or other information.

(4) Calculations of indemnity from original and corrected claim in narrative or on a Special Report. Include documentation of contract indemnity to show that the corrected claim was prepared in accordance to the FCIC approved tolerances for a policyholder within a county.

(5) All other pertinent information.

132 DOCUMENTING INSURED'S DEATH, JUDICIAL DECLARATION OF INCOMPETENCY, OR CHANGE OR TERMINATION OF A PARTNERSHIP

A Death, Incompetency, or Withdrawal of a Partner or Termination of a Partnership After Insurance Attached

(1) If the insured is deceased, judicially declared incompetent, or there is a withdrawal of a partner or termination of an insured partnership after insurance attached (i.e., for annual crops, planted by the final planting date or within the late planting period (if applicable); or for perennial crops, the calendar date insurance attaches) for any insured crop, transmit the claim form to the next level of supervision with an attached Special Report showing the following:

(a) Date of death, or declaration of incompetency, withdrawal of partner or termination of partnership.

(b) Beneficiary. If an indemnity is due, the beneficiary entitled to the indemnity must be determined and documented in the contract file folder. The documentation must include the name, mailing address, capacity of person entitled to indemnities, policy number, crop, crop year, unit, and circumstances requiring the naming of the beneficiary.

(c) The contract will remain in force for the crop year for those crops. A crop inspection is not required if the acreage report is filed by the ARD.

(d) Insurance terminates for the succeeding crop year. A successor-in-interest (if applicable) or new application must be obtained to continue insurance.

B Death, Incompetency, or Change in or Termination of Partnership Before Insurance Attached

(1) If death, incompetency, or change or termination of partnership occurred before insurance attached (i.e., for annual crops, by the final planting date or late

planting period, if applicable); or for perennial crops, before the calendar date insurance attaches), the contract terminates.

(a) When the death of an insured spouse has occurred:

1 AIPs may elect to continue coverage for a surviving spouse on a carryover policy where the death of the insured spouse occurs on or before the SCD, when:

a It is unreasonable to expect the surviving spouse to have known or contemplated the need to advise the AIP of the death of the named insured due to the timing of such event;

b There is no indication of intent to commit fraud;

c A successor-in-interest application is completed to change the insured name and identification number to the name and identification number of the surviving spouse and the entity type of the policy to an individual entity, provided the surviving spouse is eligible for coverage and has an insurable share in the crop after the death of the former policyholder; and

d The surviving spouse was listed as a SBI on such policy, unless the exception specified in PAR. 14 E (2) (a) applies.

2 The surviving spouse will be required to use the deceased spouses existing APH history and non-actual yield/assigned yields.

3 If you find an insured spouse has died before the SCD and there is a surviving spouse, and the contract has not been transferred over to the surviving spouse, document and contact your supervisor so it can be determined if the AIP will continue coverage providing the spouse meets the criteria in (a) 1 and 2 above.

(b) When declarations of incompetency or change or termination of partnership has occurred, a successor-in-interest application may be taken from qualified applicants to maintain continuity of insurance and may preserve any favorable insurance experience/premium discounts and APH history. Check to determine if an application for a successor-in-interest is in effect.

133 BANKRUPTCY

A General Information

It is important that the AIP be notified promptly when an insured has filed for bankruptcy or is in bankruptcy.

B Adjuster Responsibilities

If the adjuster first gains knowledge of the insured filing or being in bankruptcy during a loss adjustment inspection, the adjuster will obtain the following information and promptly relay to the AIP.

(1) Insured's Name,

(2) Contract Number,

(3) Insured's Social Security or TAX I.D. Number,

(4) If possible, the bankruptcy number assigned by the court, and

(5) If possible, the court or district court in which the bankruptcy has been filed.

C Loss Inspection. The adjuster will complete the loss inspection in its entirety, and will attach a Special Report with the information stated in B above.

134 MODIFICATION OF REQUIREMENT TO DESTROY CROP BEFORE INDEMNIFICATION

A General Information

When crops are planted in low-level soil moisture that continues to stay low, it often results in extremely poor germination of the crop with very little or no survival of what did germinate. When areas of the country that are subject to wind erosion experience this situation, it is unlikely that producers in those areas can establish any cover crop to keep the topsoil from blowing. To deter wind erosion in these areas, the county NRCS, soil specialists from the local CES, etc., may recommend that the existing soil surfaces **NOT** be disced, plowed, etc., in order to preserve existing soil surfaces and existing plants and plant residue.

B Modification of Requirement to Destroy Crop Before Indemnification

(1) If conditions exist as described in subparagraph A above and the county NRCS, County Food & Agriculture Council, and/or a soil specialist from the CES recommend that existing soil surfaces, plants and plant residue **NOT** be disturbed by discing, plowing, etc., in order to deter wind erosion, the AIP may authorize finalization of claims prior to destruction of the crop. This authorization is to be used only if the insured certifies that the crop will not be harvested and the acreage will be put to its intended other use when there is sufficient moisture. These procedures apply to immature and mature unharvested crop acreage.

(2) Obtain the insured’s certification that the crop will not be harvested on the Certification Form at the time the claim is signed. Complete the Certification Form as instructed in this handbook, with these exceptions:

Column Names

(a)	Intended Use	Enter the insured's intended future use.
(b)	Actual Use	Enter N/A.
(c)	Date	Enter N/A.
(d)	Remarks	Enter "As indicated by the insured's signature below, the insured certifies that the acreage in Unit XXXX WILL NOT be harvested and that the acreage will be put to the use stated in item 11 when there is sufficient soil moisture. The acreage will not be reappraised by the AIP."

(e)	Insured's Signature & Date	Obtain insured's signature and date of signature. (The form should be signed on the same day that the claim is signed.)
(f)	Accepted or Rejected	Mark "Accepted" or "Rejected," as appropriate.
(g)	Code No. and Field Person's Signature	Adjuster's signature, code and date of signature. (The form should be signed on the same day that the insured signed the claim.)

(3) If this authority is utilized, the AIP will monitor the insured's certified disposition of the crop by implementing a random review of not less than 10 percent of such claims after sufficient moisture is received to allow destruction of the crop.

(4) In the event that it is found that a crop has been harvested from the released acreage and the harvested production is greater than the appraised production, a corrected claim will be prepared using the harvested production if the amount of indemnity will be reduced.

(5) Documentation: Include in the insured's loss file folder the following (but not limited to): the written recommendation from the NRCS, soil specialist from CES, or other acceptable entity to not disturb the soil surface, crop, or crop residue, pictures documenting this condition, the Certification Form signed by the insured and adjuster, and paperwork from any random review of this unit.

135 CHEMICAL DAMAGE DUE TO ADVERSE WEATHER CONDITION

A <u>Damage From Chemical Carryover Due to An Extended Adverse Weather Condition</u>

(1) Although chemical carryover is NOT a named insured peril under the insurance contract, any loss of production caused by chemical-carryover damage resulting from a named peril is covered, provided the insured followed good farming practices.

EXAMPLE: Drought extending from one crop year into another crop year caused chemical- carryover damage to the next year's crop. Such damage is covered provided the insured followed recognized good farming practices (i.e., the chemical was appropriate for the crop, applied at the proper times, the proper amount applied in accordance with the manufacturer's instructions, and the insured adhered to any manufacturer warnings about planting under certain conditions, etc.

(2) Any payments or replacement product value(s) from chemical companies or suppliers as compensation for loss of production must be converted to an uninsured cause of loss appraisal as instructed in C below.

B <u>Chemical Damage Due to Excess Precipitation</u>

Any loss of production caused by chemical damage resulting from excess precipitation causing the chemical previously applied to the crop to prematurely release all at once, is covered provided the insured followed recognized good farming practices (i.e., the chemical was appropriate for the crop, applied at the proper times, the proper amount applied in accordance with the manufacturer's instructions, the insured adhered to any

manufacturing warnings about planting under certain conditions, etc.). However, any payments or replacement product value(s) from chemical companies or suppliers as compensation for loss of production must be converted to an uninsured cause of loss appraisal as instructed in C below.

C Calculation. Calculate the uninsured cause appraisal by dividing the payment (or replacement product value) by the insured's price election for the insured crop. Include, as an uninsured cause of loss appraisal, any payments or replacement product values:

(1) Provided to the insured,

(2) Pending,

(3) Offered to the insured (even if such offer has been rejected by the insured), and/or

(4) For which the insured might be eligible if a claim to the chemical company or supplier had been filed.

D Documentation. Explain your calculations in the narrative of the claim or on a Special Report.

136 AIP GOOD FARMING PRACTICE (GFP) DETERMINATIONS

A General Information

The AIP must make a decision whether production methods used by a producer constitute GFP under the Basic Provisions and if the producer carried out those GFPs. In deciding if the producer carried out a GFP, the AIP may ask producers to establish that they have complied with policy provisions and followed GFPs. In doing so, producers must provide the AIP with all the relevant facts relating to their agronomic situation, including but not limited to, receipts, farm records, third party verification, etc. as requested.

B Documentation from Producer

To decide if a production method constitutes a GFP, the AIP may ask the producer to provide, as applicable, published material relating to the production method or a written opinion directly from an agricultural expert:

(1) Regarding whether the production method used by the producer would meet the standards contained in subparagraph C (4) below.

(2) Recommending the production methods that would meet the standards contained in subparagraph C (4) below.

(3) If a written opinion is obtained, a statement disclosing any familial or other business relationship the expert has with the producer, AIP, agent or adjuster.

(C) GFP decisions will be based on:

(1) The agronomic situation of the producer, which includes material facts about the production methods that were used or will be used to produce the crop as well as weather and climate factors, pest or disease risks, etc. that affect the crop; and

(2) The opinion from at least one agricultural expert in one of the following forms:

(a) Published material or a written opinion regarding whether the production method used by the producer, or

(b) Production methods recommended by the agricultural expert, meet the standards contained in subparagraph C (4) below.

If an agricultural expert provides a written opinion, a statement must be included regarding any familial or other business relationship between the expert and the approved AIP, agent, loss adjuster or producer.

(3) The recommendation of at least one additional agricultural expert if:

(a) The expert providing an opinion has a business relationship with the producer, such as providing of advice and/or sale of inputs to the producer's operation, or is employed by a firm that has provided such advice or inputs;

(b) The agricultural expert providing an opinion has a familial relationship with the producer or approved AIP, loss adjuster or agent or will benefit financially from the outcome of the opinion as a result of some other business relationship other than disclosed amounts paid to provide a written opinion in a timely manner; or

(c) The written opinion is not supported by published documentation.

(4) Whether the production method used by the producer will:

(a) Allow the insured crop to make normal progress toward maturity;

(b) Produce at least the yield used to determine the production guarantee or amount of insurance, including any adjustments for late planted acreage;

(c) Not reduce or adversely affect the yield; and

(d) Be generally recognized for the area or is contained in the organic plan, as applicable.

D <u>GFP Decision</u>

(1) For the AIP to render a decision, all information required in subsection C (1)-(4) above must be provided by the producer to the AIP upon request.

(2) If the agricultural expert is not qualified to render an objective, unbiased opinion of the production methods, crop, or areas at issue, the opinion cannot be considered in the GFP decision or determination.

(3) GFP decisions apply to all the shareholders on the acreage for which a decision is made.

(4) For more information, refer to MGR. 05-010 and MGR. 05-012.

E Refer to PAR. 140 for information about GFP Administrative Reviews conducted by FCIC/RMA.

137 SIMPLIFIED CLAIM PROCESS (SCP)

AIP and producer participation in SCP is voluntary.

A The crops and criteria for claims to qualify for SCP are as follows:

(1) Eligible crops are:

Almonds, barley, canning and processing sweet corn, canola, corn, cotton, dry beans, dry peas, flax, grain sorghum, green peas, oats, peanuts, popcorn, rapeseed, rice, rye, soybeans, sugar beets, sunflowers, wheat, and any crops covered under the Crop Revenue Coverage (CRC), Revenue Assurance (RA), and Income Protection (IP) plans of insurance.

(2) Eligible crop policies may be designated in any risk sharing fund of the Standard Reinsurance Agreement.

(3) Crop policies with basic, optional, whole farm, or enterprise units are eligible, provided all other SCP criteria are met.

(4) SCP can be used on a unit containing both planted and prevented planted acreage provided a prevented planting claim has been finalized prior to submission of the SCP claim on the planted portion of the unit.

(5) Dollar Tolerances for SCP

(a) The gross indemnity (insured's share prior to any dollar amount due the insurance provider) must not be greater than $5,000 for any optional unit. The gross indemnity must not be greater than $10,000 for any basic, whole farm, or enterprise crop unit. When calculating the gross indemnity, replanting payments and prevented planting payments may be excluded.

(b) SCP dollar tolerances are based on dollar amount of the production loss; therefore, the indemnity's revenue component shall not be considered when determining SCP limits; i.e., if a revenue loss causes the dollar indemnity to exceed the tolerance but the production portion does not, the claim is still eligible for SCP.

(6) All planted acreage in the unit must be harvested. EXCEPTION: Claims with an on-site preliminary inspection where acreage was determined, appraised and a release made for the unit may be finalized under SCP, provided none of the appraised acres have been harvested.

(a) Third-party, written verification[1/] must be available and the insured must submit these with the completed SCP form that accounts for all production from all indemnified units. The insured must write beside each load on the settlement sheet, the unit numbers and or field identification from which this production came. If only a field identification is shown, the adjuster must be able to verify that the field identification can be correlated with the unit

[1/] Settlement sheets or summary sheets are acceptable; however, individual load weight tickets are not acceptable.

numbers for the crop/county for the current crop year. If the field identification cannot be correlated to a unit number for the crop/county, the settlement or storage records cannot be considered acceptable.

(b) No portion of the crop may be left in the field except appraisals made on preliminary inspections as outlined in the "Exception" in (6) above.

(c) Copies of either Farm Service Agency (FSA) acreage measurements or third-party measurements as allowed by PAR. 80, must also be provided by the insured, if available. Otherwise, copies of aerial photos identifying each field, crop planted in each field, and number of acres in each field must be provided with the completed SCP form. In all cases, the applicable indemnified unit acreage must be identified. If the insured does not have acceptable acreage measurements available, but acceptable previous measurements (as defined in paragraph 80 of the LAM) are available to the AIP, the AIP must use these measurements.

(7) Crops eligible for SCP if quality adjustment is involved

Not all crops listed in A (1) above are eligible for SCP if quality adjustment is involved. Only the following crops involving quality adjustment are eligible for SCP and only if they meet the criteria listed below:

(a) Any crops listed in A (1) having quality provisions in the SPOIs and that have claims involving quality adjustment other than for a substance or condition injurious to human and animal health, may qualify for SCP when the pre-established DF (to determine the QAF) for the level and type of damage (except DFs for substances or conditions injurious to human and animal health) are contained in the actuarial documents.

(b) Cotton claims with quality adjustment may also qualify for SCP as cotton quality adjustment factors are obtained from the Daily Spot Cotton Quotations published by the Agricultural Marketing Service.

(c) Factors that affect quality must be determined by a licensed grain grader as specified in PAR. 96 E. A verifiable document (e.g., grade certificate) from a licensed grader must be included with the SCP form. The grade slip must include insured's name, the applicable crop, and crop year.

(8) Claims involving any of the following conditions are not eligible.

(a) Farm-stored production, even if weighed and returned to farm.

(b) Claims with only prevented planting, and prevented planting claims that have not been finalized prior to the submission of the SCP claim for the planted portion of the unit.

(c) Corrected claims.

(d) Delayed notices or delayed claims.

(e) Claims requiring a revised acreage report unless it is a downward revision in liability, that results from third-party verified documentation agreed to, and supplied by the insured.

(f) AIP employees, loss adjusters, agents, or FCIC/RMA employees or any spouse or family member residing in the same household as any such person.

(g) Zero production is reported.

(h) Production fed to livestock.

(i) Crops covered under a pilot program that has been in effect for 2 or fewer crop years.

(j) Claims involving quality adjustment if:

1 One of the qualifying quality deficiencies is due to a substance or condition injurious to human or animal health; e.g., Aflatoxin,

2 There are no pre-established discount factors (to determine quality adjustment factors) contained in the actuarial documents for the level or type of damage; or

*** 3 The crop is not cotton as described in A (7) above.

(9) AIPs must not allow their agents to complete or become involved in SCP claims other than the following:

Agents are allowed to mail, e-mail scanned documents, or fax the SCP claim form and supporting documents to the designated AIP representative/office but cannot in anyway, help the insured complete the SCP form paperwork.

(10) The AIP must instruct the insured to submit the SCP claim form within the time frame specified in the crop provisions or timeframe specified in the quality provisions section of the SPOIs, if applicable. (Also refer to PAR. 68 if the AIP has extended the time the insured has to harvest the crop due to adverse weather preventing harvest by the calendar date for the EOIP). SCP claim forms and required documentation (e.g., maps, settlement sheets, etc.) received after this timeframe (SPOIs, if applicable), must be denied in accordance with the Basic Provisions, section 14 (or like section in RA or CRC Basic Provisions).

(11) All AIPs must use appropriate discretion in their use of SCP as they would in administrating any claims procedure.

(12) If FCIC determines that an AIP or managing general agent does not have a satisfactory performance record as defined in the Standard Reinsurance Agreement, use of this procedure by such AIP or managing general agent shall be suspended until such time that a satisfactory performance record has been restored.

B The AIP shall not use SCP for a policyholder if misrepresentation of any material fact is suspected.

C SCP Data Through Data Acceptance System (DAS)

(1) SCP claims data must be processed through DAS in accordance with Appendix III requirements; i.e., the 21 Record (Loss Line) transmitted for simplified claims must include the Simplified Claim Flag ("S"). As stated in A (5) (b) above, if a revenue loss causes the dollar indemnity to exceed the tolerance but the production portion does not, the claim is still eligible for SCP and the claim must be processed through DAS with the "S" flag. Likewise, if a revenue loss is paid after the production portion has processed which causes the dollar tolerance for the unit to exceed the SCP dollar tolerances, the claim still must be processed through the system with an SCP flag. This is done by putting an "H" in the "Price Indicator" field on the 21 record (Appendix III, 21 Record states "H' = Harvest Price causes indemnity to exceed SCP Limit.")

(2) Also, the AIP is responsible for ensuring that the SCP is administered in a way that the information collected and submitted through DAS is accurate.

D SCP Forms and Completion Instructions

All SCP claims must be completed on a form developed by the AIP that captures all the required loss information from the insured. The AIP is also responsible for developing comprehensive completion instructions for the insured to complete the SCP form.

E SCP Reviews

AIPs must perform field inpsections[1/], of not less than 15% of SCP claims submitted for the current crop year, unless this requirement is removed from Appendix IV of the SRA. If an SCP claim was submitted for the current crop year and an indemnity was paid using SCP procedures during either of the previous 2 crop years, a must be completed for the current crop year. If this requirement is removed from Appendix IV of the SRA, this is not a required review.

[1/] Field inspection as defined in Appendix IV of the SRA.

PART 5 LATE PLANTING COVERAGE

138 GENERAL INFORMATION

This part covers late planting (LP) provisions that are contained in the Basic Provisions. These provisions provide automatic LP coverage, unless the specific crop provisions or SPOIs specifies otherwise.

139 LATE PLANTING COVERAGE

A General Information

(1) LP Period

For applicable crops planted during the LP period (regardless of the reason for the delayed planting), the per-acre production guarantee for those acres will be reduced as stated in C below, unless otherwise specified in the crop provisions. The LP period, as specified in the Basic Provisions, is 1-25 days after the final planting date unless specified otherwise in the crop provisions or SPOIs. (Crop
*** Provisions for millet, and tobacco specify less than 25 days).

(2) After the LP Period

If the insured crop was prevented from being planted, due to an insurable cause, by the final planting date or during the LP period by an insurable cause occurring within the insurance period for PP coverage AND PP provisions are applicable to the insured crop, coverage may be provided for acreage planted to the insured crop after the LP period (or after the final planting date for crops that do not have a LP period). Refer to PAR. 139 C (2) for more information.

B Crops having automatic LP coverage are:

Barley 3/, buckwheat, canola/rapeseed, corn, cotton (except no late planting period for ELS cotton), dry beans, dry peas, flax 3/, grain sorghum, green peas 1/, hybrid seed corn, hybrid sorghum seed, millet, oats 3/ , onions, peanuts, popcorn 1/, mustard, central and southern potatoes, northern potatoes, processing sweet corn 1/, processing beans 1/, rice, rye 3/, silage sorghum, safflowers, soybeans, sugar beets 2/, sunflower seed, tobacco (Guaranteed Production (GP)), tobacco (Quota (QTA)) and wheat 3/.

1/ Late planting period allowed ONLY if provided in the SPOIs, and the insured provides written approval from the processor by the ARD that it will accept the production from the late planted acres when it is expected to be ready for harvest.

2/ LP is not available in California Counties with an April 30 CCD and a July 15 cancellation date.

3/ Late planting period is applicable to small grains, except to any barley or wheat acreage covered under the terms of the Wheat or Barley Winter Coverage Endorsement. In counties having one fall final planting date for acreage covered under the Wheat or Barley Winter Coverage Endorsement and another fall final planting date for acreage not covered under the endorsement, the fall late planting period will begin after the final planting date for acreage NOT covered under the endorsement.

C Guarantee

(1) **Planted within the LP period**

(a) For all the crops **except AUP cotton, millet, Tobacco** that are listed in subparagraph B above, the per-acre production guarantee or per-acre amount of insurance will be reduced by one (1) percent per day for each day planted after the final planting date, **unless otherwise specified in the SPOIs.**

***

The per-acre production guarantee is reduced a maximum of 25 percent for planting 25 days after the final planting date.

(b) For Millet:

In accordance with the Millet Crop Provisions the following applies, unless stated otherwise in the SPOIs:

For the first 10 days after the final planting date, the per-acre production guarantee for those acres will be reduced 1 percent for each day delay in planting.

For the 11th day through the 20th day after the final planting date, the per-acre production guarantee for those acres will be reduced an additional 3 percent for each day delay in planting.

The per-acre production guarantee is reduced a maximum of 40 percent for planting 20 days after the final planting date.

***

(c) For Tobacco:

***

In accordance with the Tobacco Crop Provisions the following applies, unless stated otherwise in the SPOIs:

For the first 10 days after the final planting date, the per-acre production guarantee for those acres will be reduced 1 percent for each day delay in planting.

For the 11th day through the 15th day after the final planting date, the per-acre production guarantee for those acres will be reduced an additional 2 percent for each day delay in planting.

The per-acre production guarantee is reduced a maximum of 20 percent for planting 15 days after the final planting date.

***

(d) For AUP Cotton:

In lieu of the AUP Cotton Provisions and in accordance with most of the AUP Cotton SPOIs, the per-acre production guarantee will be reduced by one (1) percent per day for each day planted after the final planting date, up to a maximum of 15 days. However, for Texas counties, the SPOIs specify a maximum is 7 days.

The maximum reduction of the per-acre production guarantee is 15 percent for planting 15 days after the final planting date. For Texas counties, the maximum reduction of the per-acre production guarantee is 7 percent for planting 7 days after the final planting date.

(2) **Planted to the insured crop AFTER the LP period (after the final planting date for crops not having a LP period)**

Provided the crop was prevented from being planted, due to an insurable cause, as stated in PAR. 139 A (2) above and PP coverage is available for the crop, the insured may choose to insure such acreage. Insureds must report the date acreage is late planted if they decide to report it as insured acreage. The per-acre production guarantee or per-acre amount of insurance for such acreage will be the same as for the insured's PP guarantee for the insured crop.

EXAMPLE: The insured has 60 percent PP coverage level with a 100 bu. per-acre guarantee for timely planted acres. The guarantee for the LP acres will be 60 bu. (.60 X 100.0).

(3) **The definition of "planted acreage" was not met due to an insurable cause**

For acreage on which an insurable cause of loss prevents completion of planting as specified in the policy definition of "planted acreage" (e.g., seed is broadcast on the soil surface but cannot be incorporated and it would have been insurable had the seed been incorporated), is covered at a reduced guarantee provided that PP coverage is available for the crop. Such acreage will be considered as acreage planted after the final planting date, and the per-acre production guarantee will be the same as the PP guarantee for the crop; e.g., the insured has 60 percent PP coverage level with a 100 bu. per-acre guarantee for timely planted acres. The guarantee for these acres will be 60 bu. (.60 X 100.0).

(4) Replanted during the late planting period due to an uninsured cause

If the insured crop is replanted during the late planting period due to the crop being destroyed by an uninsured cause (e.g., chemical damage), no reduction in the guarantee will apply. However, refer to PAR. 65 for additional details.

NOTES

PART 6 FCIC REVIEWS, DETERMINATIONS, AND INTERPRETATIONS

No award or settlement determined in appeal, administrative review, or reconsideration process can exceed the amount of liability established or which should have been established under the policy, except for interest awarded.

140 GOOD FARMING PRACTICE (GFP) ADMINISTRATIVE REVIEW

A General Information

A GFP Review is a type of administrative review to determine whether the insured followed a GFP.

(1) If the insured does not agree with a decision regarding whether the insured followed a good farming practice made by the AIP, the insured may request a good farming practice determination from the RO. If the insured disagrees with the RO good farming practice determination, the insured may request reconsideration to the Deputy Administrator of Insurance Services according to 7 C.F.R. §400.98. Refer to MGR-05-010 for more information.

(a) The insured must request a good farming practice determination from the RO before requesting reconsideration from the Deputy Administrator for Insurance Services.

(b) If the insured disagrees with an AIP GFP decision or RMA determination, the insured may sue FCIC in United States district court where the insured farm is located.

(c) If the insured elects to sue FCIC, suit must be filed within one year of the date of the reconsideration decision or RO good farming practice determination.

(2) The insured cannot sue the AIP for GFP decisions.

(3) Disputes regarding the AIP determination of the amount assigned for uninsured causes of loss for failure to follow a good farming practice must be resolved through mediation or by the rules of the American Arbitration Association.

(4) If the agricultural expert is not qualified to render an objective, unbiased opinion of the production methods, crop, or areas at issue, the opinion cannot be considered in the GFP decision or determination.

(5) GFP decisions apply to all the shareholders on the acreage for which a decision is made.

B Additional Information. For more information, refer to MGR. 05-010 and MGR. 05-012.

141 LARGE CLAIM REVIEWS AND FCIC PARTICIPATION

A General Information

The 2005 SRA requires AIPs, as a condition of reinsurance, to notify RMA of potential claims likely to exceed $500,000 or other such criteria established by FCIC. When

notified, RMA has 3 business days to decline participation, elect to participate in field inspections or review the file before agreement is reached with the policyholder.

B FCIC Participation

(1) If FCIC elects to participate in the loss adjustment (Large Claims Review) of the insured's claim, or modifies, revises, or corrects the insured's claim, prior to payment, the insured may not bring an arbitration, mediation, or litigation action against the AIP. The insured must request administrative review or appeal in accordance with 7 CFR part 400, subpart J (administrative reviews).

(2) Refer to MGR-05-009 and MGR-05-009.1 for detailed procedures for RMA participation in large claim reviews. RMA will announce any change in the criteria for notifying RMA of a potential large claim by Manager's Bulletin.

142 FCIC POLICY AND PROCEDURAL INTERPRETATIONS

If a dispute in any way involves a policy or procedure interpretation, regarding whether a specific policy provision or procedure interpretation is applicable to the situation, how it is applicable or the meaning of any policy provision or procedure, either the AIP or the insured must obtain an interpretation from FCIC in accordance with 7 CFR part 400, subpart X or such other procedures as established by FCIC.

A Where to Find How to Request Interpretations

For information on how to request procedural interpretations, refer to Manager's Bulletin 05-018.

B FCIC Interpretation

(1) Any interpretation by FCIC will be binding in any mediation or arbitration.

(2) Failure to obtain any required interpretation from FCIC will result in the nullification of any agreement or award.

(3) An interpretation by FCIC of a policy provision is considered a rule of general applicability and is not appealable. If the insured disagrees with an interpretation of a policy provision by FCIC, the insured must obtain a Director's review from the National Appeals Division in accordance with 7 CFR 11.6 before obtaining judicial review.

C Appeal of FCIC Procedural Interpretation

An interpretation by FCIC of a procedure may be appealed to the National Appeals Division in accordance with 7 CFR part 11.

143 ADMINISTRATIVE REVIEWS OR APPEALS

A Administrative Reviews or Appeals of FCIC Determinations

(1) Except for good farming determinations, if the insured disagrees with any other determination made by FCIC or any claim where FCIC is directly involved in the claims process or directs the AIP in the resolution of the claim, the insured may

request either mediation or an administrative review or both, in accordance with 7 CFR part 400, subpart J § 400.91 (c).

(2) If the insured disagrees with an Administrative Review determination, the insured can appeal this determination in accordance with 7 CFR part 11 (appeal). If the insured elects to bring suit after completion of an appeal, such suit must be filed against FCIC not later than one year after the date of the decision rendered in such appeal. Under no circumstances can the insured recover any attorney fees or other expenses, or any punitive, compensatory, or any other damages from FCIC.

B FCIC Determination for a Judicial Reviews of an AIP Indemnity Payment

In a judicial review only, the insured may recover attorneys fees or other expenses, or any punitive, compensatory, or other damages from the AIP only if the insured obtains a determination from FCIC that the AIP, the AIP's agent or adjuster failed to comply with the terms of the policy or procedures issued by FCIC and such failure resulted in the insured receiving a payment in an amount that is less than the amount to which the insured was entitled.

NOTES

EXHIBIT 1

DEFINTIONS

Abandonment	Refer to PAR. 79.
Acceptable Determined Acres.	Refer to PAR. 80.
Acreage Report (A/R) or Raisin Tonnage Report	An insurance document required by the Basic Provisions to be submitted by the policyholder used to establish the premium, and amount of coverage for the crop(s) insured by reporting the number of all acres (insurable and not insurable of the insured crop in the county in which the insured has a share), share percentage, location, practice, type, planting date, (if applicable), and any other information required for the crop.
Acreage Reporting Date	The date by which insureds are required to submit acreage reports. The acreage report must be filed not later than the date contained in the SPOIs for the insured crop, or as provided in the section entitled "Report of Acreage" contained in the Basic Provisions.
Actual Production History (APH)	An individual crop insurance yield program in which the producer furnishes or certifies acreage and production records to qualify for a production guarantee calculated from a base period. A transitional or FCIC determined yield is used if production records are not available.
Actual Yield	The yield per acre for a crop year calculated from the producer's production records and/or claims for indemnities. The actual yield is determined by dividing total production (including harvested and appraised potential production) by planted insurable acres for annual crops, and by insurable acres for perennial crops (unless production from uninsurable acreage is commingled with production from insurable acreage).
Actuarial	The statistical computation of probable risks and rates according to recorded facts. Includes all related documents.
Actuarial Documents	The material for the crop year which is available for public inspection in the agent's office, and published on RMA's website at http://www.rma.usda.gov/ or a successor website, and which shows available coverage levels, information needed to determine amounts of insurance, premium rates, premium adjustment percentages, practices, particular types or varieties of the insurable crop, insurable acreage, and other related information regarding crop insurance in the county.
Additional Coverage	A level of coverage greater than catastrophic risk protection.
Additional Price Election	The price per unit of production (or other basis as determined by FCIC) set and announced by RMA not less than 15 days prior to the sales closing date for the crop. RMA bases this price on additional data or information that has become available after the initial price election release, which allows for a more accurate price projection.

EXHIBIT 1

DEFINTIONS

Adjuster	A person under contract with or employed by the AIP and who is authorized to perform loss adjustment and related activities. The adjuster verifies information affecting the coverage and makes factual determinations regarding the existence or amount of loss under an eligible crop insurance contract. Also known as Loss Adjustment Contractor, Loss Adjuster, or Claims Adjuster.
Administrative Fee	A fee the policyholder must pay each crop year on a per-crop and county basis for catastrophic risk protection and additional coverage, as specified in the Basic Provisions and the Catastrophic Risk Protection Endorsement.
Agent	The individual licensed by the State in which an eligible crop insurance contract is sold and serviced for the reinsurance year, and who is under contract with the AIP, or its designee, to sell and service such eligible crop insurance contracts.
Agricultural Commodity	Any crop or other commodity produced, regardless of whether or not it is insurable.
Agricultural Experts	Persons who are employed by the Cooperative State Research, Education and Extension Service, or the agricultural departments of universities, or other persons approved by FCIC, whose research or occupation are related to the specific crop or practice for which such expertise is sought.
AIP (Approved Insurance Provider)	A legal entity, including the Company, which has entered into a Standard Reinsurance Agreement with FCIC for the applicable reinsurance year.
AIP Inspection	An inspection initiated by the AIP. These inspections may be initiated where misrepresentation is suspected or where routine spot checks are being performed.
Annual Crop	An agricultural commodity that normally must be planted each year.
Another Use, notice of	The written notice required when the insured wishes to put acreage to another use (refer to definition of other use).
Agreement in Writing	An agreement between two or more parties as would be permitted by the Crop Provisions or SPOIs. For example, the Coarse Grains Crop Provisions provide that via an agreement between a tenant and landlord, the party who incurs the entire cost of the replant can receive a replanting payment based on the total share insured by the AIP. Written Agreements are different from agreements in writing. Refer to Written Agreement definition.
Application	The form used to apply for multiple peril crop insurance coverage in a specific state and county which identifies the applicant, entity of applicant, crop, endorsements (options) to the crop provisions, types, coverage levels, and price elections selected by the applicant. This form must be completed and filed in the agent's office not later than the sales closing date of the

DEFINTIONS

Application (Continued)	initial insurance year for each crop for which insurance coverage is requested. The AIP must accept the application before insurance coverage will commence.
Appraised Production	Production from unharvested acreage determined by the AIP that reflects potential production for the crop at the time of appraisal. (Appraised production can also be production assessed (harvested or unharvested acreage) for uninsured causes, destroying or putting acreage to another use without consent, abandoned acreage, or the insured's failure to provide records of production that are acceptable.) Appraisals made for Appraised production LOST due to uninsurable causes are not allowed for APH production records.
Appraisal Worksheet	A form used by an adjuster to enter appraisal information such as plant counts, tillers, sample weights, etc., to compute appraisals on unharvested or damaged crop acreage.
Approved Yield	The actual production history (APH) yield, calculated and approved by the verifier, used to determine the production guarantee by summing the yearly actual, assigned, adjusted or unadjusted transitional yields and dividing the sum by the number of yields contained in the database, which will always contain at least four yields. The database may contain up to 10 consecutive crop years of actual or assigned yields. The approved yield may have yield adjustments elected under applicable policy provisions, yield revisions/reductions, or other limitations according to FCIC-issued procedures applied when calculating the approved yield.
Area	Land surrounding the insured acreage with geographic characteristics, topography, soil types and climatic conditions similar to the insured acreage.
Area Yield Plan	Refer to GRP.
Assignment of Indemnity	A transfer of policy rights, made on the AIP's form, and effective when approved by the AIP. It is the arrangement whereby the insured assigns his/her right to an indemnity payment to any party of the insured's choice for the crop year.
Assuming Agent	An AIP agent who assumes the contracts that were previously serviced by another AIP.
Assuming Company	An AIP that assumes the contracts that were previously serviced by another AIP.
Authorized Representative	A party that is authorized by the applicant/insured via a properly executed Power of Attorney to represent and sign crop insurance documents for the applicant/insured.

EXHIBIT 1

DEFINTIONS

Basic Provisions	The multiple peril crop insurance policy (Common Crop Insurance Policy) that provides basic policy provisions common to all crops. Crop provisions that are specific to the crop are found in the crop provisions or crop endorsements.
Basic Units	Refer to PAR. 55
Beneficiary	The entity determined by the AIP to receive indemnity payments, in the event of the death of the original policyholder.
Block	Trees, vines, or bushes in an orchard, vineyard, or bog of a single or mixed age and density, separated by applicable practice, type, variety, different T-Yield Map Areas, or other characteristics shown in the actuarial documents (e.g., early, mid, late peaches).
Buffer Zone	A parcel of land, as designated in the insured's organic plan, that separates agricultural commodities grown under organic practices from agricultural commodities grown under non-organic practices, and used to minimize the possibility of unintended contact by prohibited substances or organisms.
Bypassed Acreage	Refer to PAR. 89.
Cancellation Date	The calendar date specified in the Crop Provisions on which coverage for the crop will automatically renew unless canceled in writing by either the insured or the AIP, or terminated in accordance with the policy terms.
Carryover Insured	An entity that was insured the previous crop year without respect to the carrier or agent and is determined on crop policy (by county) basis. If the insured had an MPCI, Income Protection, Crop Revenue Coverage, Group Risk Protection, Group Risk Income Protection, Revenue Assurance, Adjusted Gross Revenue, AGR-Lite, or other policies or other plans of insurance approved by FCIC, and then switches from one plan to another plan, the insured is still considered a carryover insured.
CAT	Acronym for Catastrophic Risk Protection. It is the minimum level of Federal crop insurance coverage a producer can obtain.
Catastrophic Risk Protection (CAT)	*** The minimum level of coverage offered by FCIC.
Ceding Agent	An AIP agent who cedes or transfers a contract (that the agent previously serviced) to another AIP agent.
Ceding Company	The AIP that cedes or transfers a contract (that the AIP previously serviced) to another company.
Certification Form	Refer to PAR. 66.

EXHIBIT 1

DEFINTIONS

Certified Organic Acreage	Acreage in the certified organic farming operation that has been certified by a certifying agent as conforming to organic standards in accordance with 7 CFR part 205.
Certifying Agent	A private or governmental entity accredited by the USDA Secretary of Agriculture for the purpose of certifying a production, processing or handling operation as organic.
Cherry Pick	To harvest or remove a portion of the crop from the crop acreage by selecting the best or most desirable fruit production including quality by either hand or mechanical harvesting while leaving less desirable fruit unharvested on the crop acreage.
Circumference	The distance around the outer boundary of a circular structure, such as a grain bin.
Claim	See Claim for Indemnity.
Claim Form	An insurance document used to record appraisals of potential or assessed production, unharvested and harvested production to count, guarantees, and acres by practice and type from which an indemnity will be computed.
Claim for Indemnity	Loss and contract information documented on a claim form for the insured due to damage or loss to an insured crop unit and required by the Basic Provisions to be submitted to the AIP no later than 60 days after the end of the insurance period.
Claims Adjuster	Refer to Adjuster.
Claims Supervisor	Any person having immediate or day-to-day supervisory control, management or oversight authority of the activities of adjusters or other persons who determine whether an indemnity will be paid and the amount thereof.
Classified Land (Insurable Land)	Land on which both a coverage and rate have been established in the County Actuarial Documents, making crops showed on the table that are grown on the land eligible for insurance.
Code of Federal Regulations (CFR)	The codification of general and permanent rules published in the Federal Register by the Executive departments and agencies of the Federal Government. Rules published in the Federal Register by FCIC are contained in 7 CFR chapter IV. The full text of the CFR is available in electronic format at http://www.access.gpo.gov/ or a successor website.
Collateral Assignment	Refer to Assignment of Indemnity.
Commingled Production	Refer to PAR. 126.

EXHIBIT 1

DEFINTIONS

Companion Contracts	Crop insurance contracts of individuals having a share in the same crop/crop units for the crop year.
Common Land Unit (CLU)	The smallest unit of land that has: a permanent, contiguous boundary; common land cover and land management; common owner and common producer association.
Company	As used in the context of this handbook, Company refers to AIPs.
Conical Pile	A quantity of crop whose base is a circle and whose sides taper evenly up to a point.
Consent	Approval in writing by the AIP allowing the insured to take a specific action; e.g., putting a damaged crop to another use.
Continuous Coverage	Insurance coverage not canceled or terminated for a crop year. Transfer of coverage to a different AIP is still continuous coverage.
Continuous Rating	A rate presentation method that allows a rate to be calculated for each unit of measure of a crop or for any producer's APH yield.
Continuous Production Report	Production reports submitted by a producer for each consecutive APH crop year (within the base period) and must include the most recent APH crop year in the base period.
Contained Water	Refer to paragraph 121.
Contract	Refer to Insurance Contract or Policy.
Contract Changes	The form used to make changes to or cancel an existing crop insurance contract.
Contract Change Date	The calendar date by which changes to the policy, if any, will be made available in accordance with the applicable section in the Basic Provisions.
Contract File	Refer to Policyholder File.
Contract Number	A number assigned by the AIP to identify insureds' specific contracts. Also known as policy number.
Contract Provisions	All the provisions that make up the contract. See insurance contract.
Controlled Substance Violation	Refer to PAR. 56.
Conventional Farming Practice	A system or process for producing an agricultural commodity, excluding organic farming practices, that are necessary to produce the crop that may be, but is not required to be, generally recognized by agricultural experts for the area to conserve or enhance natural resources and the environment.

EXHIBIT 1

DEFINTIONS

Conveyance	Anything in which agricultural commodities are transported. This may include combine hoppers, commodity bins, grain carts, grain wagons, farm truck, semi trailer, railcar, or barge. The term "transported" does not include all forms of grain movement; e.g., the following are not conveyances, grain augers, grain dryers, elevator legs, or picking lines.
County (Parish in Louisiana) ***	The county, parish, or other political subdivision of a state listed in the actuarial documents and designated on the accepted application, (county includes acreage in a field that extends into an adjoining county or state if the county or state boundary is not readily discernible).
County Crop Program	The offering of insurance coverage by FCIC on a crop in a specified county or parish as approved by FCIC's Board of Directors.
Cover crop	A crop generally recognized by agricultural experts as agronomically sound for the area for erosion control or other purposes related to conservation or soil improvement. A cover crop may be considered to be a second crop (refer to the definition of "second crop").
Coverage (Guarantee)	The amount of insurance protection against insured loss of production or value, by unit as shown on the insured's summary of coverage.
Coverage Begins Date	The calendar date insurance begins on the insured crop, as contained in the Crop Provisions (SPOIs, if applicable), or the date planting begins on the unit.
Crop Endorsement	An adjunct to the General Crop Insurance Policy or Basic Provisions that contains crop-specific provisions.
Crop Handbooks	The FCIC-issued crop-specific procedures that must be used to perform loss adjustment. They contain appraisal methods, forms completions instructions, and any other loss adjustment instructions specific to the crop.
Crop Loss Adjustment Standards (CLAS)	The required crop-specific instructions and methods (standards) that must be utilized during loss adjustment. The AIP must comply with these standards when performing loss adjustment.
Crop of Economic Significance	A crop or a type or variety of a crop (if the applicable policy allows the option to separately insure individual crop types or varieties) that has either contributed in the previous crop year, or is expected to contribute in the current crop year, 10 percent (10%) or more of the total expected value of the producer's share of all crops grown in the county. However, a crop will not be considered a crop of economic significance if the expected liability under the CAT Endorsement is equal to or less than the administrative fee required for the crop ($100 per crop per county).

EXHIBIT 1

DEFINTIONS

Crop Provisions	An adjunct to the Basic Provisions that contains crop-specific provisions (appraisal of production, production to count, indemnity calculations, definitions, etc.)
Crop Year	The period within which the insured crop is normally grown, regardless of whether or not it is actually grown, and designated by the calendar year in which the insured crop is normally harvested, unless otherwise specified in the crop provisions.
Damage	Injury, deterioration, or loss of production of the insured crop due to insured and/or uninsured causes.
Deductible	The amount determined by subtracting the coverage level percentage the insured chooses from 100 percent. For example, if the insured elected a 65 percent coverage level, the insured's deductible would be 35 percent (100% - 65% = 35%).
Delayed Claim	A claim for indemnity form signed by the insured later than the time required in the applicable policy.
Delayed Notice	A notice of damage or loss filed by the insured after the time required in the policy.
Destroyed Without Consent	A determination made by an adjuster that an insured has altered the condition of a crop (without permission) so that an accurate appraisal cannot be made.
Diameter	A straight line measurement passing through the center of a circle. Normally an inside measurement when measuring the volume of a round storage structure.
Digitizer	A measuring tool that computes areas and lengths by tracing an area and directly entering the results into a computer. Some digitizers have small internal computers. It is used to obtain acreage measurements.
Disinterested third party	A person that does not have any familial relationship (parents, brothers, sisters, children, spouse, grandchildren, aunts, uncles, nieces, nephews, first cousins, or grandparents, related by blood, adoption or marriage, are considered to have a familial relationship) with you or who will not benefit financially from the sale of the insured crop. Persons who are authorized to conduct quality analysis in accordance with the crop provisions are considered disinterested third parties unless there is a familial relationship. When making quality determinations, persons employed by USWA licensed warehouses and warehouses holding a storage agreement with CCC shall be considered disinterested third parties. For crops having quality provisions in the SPOIs, the SPOIs state: In addition to the definition of “Disinterested third party,” a person or business who does not routinely purchase production for resale or for feed

DEFINTIONS

Disinterested third party (Continued)	will not be considered a disinterested third party if the RIVs applied by the buyer are not reflective of the RIVs in the local market.
Double Crop	Producing two or more crops for harvest on the same acreage in the same crop year.
Earliest Planting Date	The initial planting date contained in the SPOIs, which is the earliest date the insured may plant an insured agricultural commodity and qualify for a replanting payment if such payments are authorized by the Crop Provisions.
Eligible crop insurance contract	An insurance contract for an agricultural commodity authorized by the Act with terms and conditions in effect as of the applicable contract change date, that is sold and serviced consistent with the Act, FCIC regulations, the procedures and the Standard Reinsurance Agreement, having a sales closing date within the reinsurance year, and with an eligible producer.
Eligible producer	A person who has an insurable interest in an agricultural commodity, who has not been determined ineligible to participate in the Federal crop insurance program, and who possesses a United States issued social security number or employer identification number.
Employee	A person who works for FCIC or AIP in return for wages or salary.
End of Insurance Period	The date upon which the insured's crop insurance coverage ceases for the crop year.
Enterprise Unit	Refer to PAR. 55 I for the definitions for crops insured under the Common Crop Insurance Policy Basic Provisions, Crop Revenue Coverage Basic Provisions, and Revenue Assurance Basic Provisions
Established Price	The price per unit of production issued by RMA by each crop's filing date. Also, known as Price Election.
Familial relationship	Means the same as relative. (Refer to definition of relative).
Farm Serial Number (FSN)	A number assigned to the farm by the local FSA office. Also known as FSN.

EXHIBIT 1

DEFINTIONS

Farming Organization	One or more individuals who participate in establishing a yield history; corporations, partnerships, and family operations are included under this title.
FCIC	An acronym for Federal Crop Insurance Corporation. A wholly owned government corporation under the control of the USDA and administered by the Risk Management Agency.
FCIC-issued Policy Provisions	Multiple Peril Crop Insurance (MPCI) policy provisions, (including endorsements and amendments) published in the Federal regulations or approved by the FCIC Board of Directors for pilot programs and that the AIP uses to print the policy provisions provided to the insured for which the AIP services.
Field	All acreage of tillable land within a natural or artificial boundary (e.g., roads, waterways, fences, etc.). Different planting patterns or planting different crops do not create separate fields. A field may be identified by a FSA FSN and field/or CLU number.
Final Acreage Reporting Date (ARD)	For each insured crop in the county on or before the ARD contained in the SPOIs for the insured crop except as follows: (1) if multiple crops are insured (by the same AIP) that have final planting dates on or after August 15 but before December 31, the acreage report must be submitted for all such crops on or before the latest applicable ARD for such crops; (2) if multiple crops are insured (by the same AIP) that have final planting dates on or after December 31 but before August 15, the acreage report must be submitted for all such crops on or before the latest applicable ARD for such crops; (3) If the SPOIs designate separate planting periods for a crop, the acreage report for each planting period must be submitted on or before the ARD contained in the SPOIs for the planting period; and (4) If planting of the insured crop continues after the final planting date or is prevented from planting during the late planting period, the ARD will be the later of: (a) the ARD contained in the SPOIs or applicable date described in (1) or (2) above if there are multiple insured crops insured by the same AIP; or (b) Five days after the end of the late planting period for the insured crop, if applicable. (See Late-Filed Acreage Reports for acreage reports filed after this date.)
Final Claim	A claim form developed by the AIP that meets the FCIC-issued form standards submitted (signed) by the insured after a final inspection has been completed and after all the necessary information to make an applicable indemnity payment, replant payment, or a prevented planting payment has been recorded on the claim form.
Final Inspection	An inspection that requires all of the necessary verifications and determinations of production (if applicable for the type of inspection), acreage, practice, etc., to have been made on a unit prior to processing an indemnity payment, replant payment, or prevented planting payment.

EXHIBIT 1

DEFINTIONS

Final Planting Date	The date contained in the SPOIs for the insured crop by which the crop must initially be planted in order to be insured for the full production guarantee or amount of insurance per acre. (Crops initially planted after this date are not insurable unless the crop provisions provide for coverage that extends beyond the planting date. Also, refer to definitions for Timely Planted and Late Planting Period.)
First Insured Crop	With respect to a single crop year and any specific crop acreage, the first instance that an agricultural commodity is planted for harvest or prevented from being planted and is insured under the authority of the Act. For example, if winter wheat that is not insured is planted on acreage that is later planted to soybeans that are insured, the first insured crop would be soybeans. If the winter wheat were insured, it would be the first insured crop.
Flood Irrigation	A method of irrigation other than sprinkler (traveling gun, center pivot, or other recognized forms of sprinkler systems) or furrow irrigation in which the cropland (wider than a furrow) between raised borders, embankments, or dikes of soil is inundated with controlled amounts of water.
Food Security Act	A law passed by Congress in 1985 that included provisions to discourage the planting of agricultural commodities on converted wetlands or land of predominately highly erodible soils.
FSA	Acronym for Farm Service Agency, an agency of the USDA, or successor agency.
FSA Farm Serial Number	Refer to Farm Serial Number.
Furrow Irrigation	A type of irrigation carried out by use of gravity water flow at the soil surface that is contained within furrows between planted rows. (Rows must be far enough apart to allow water furrows). The land must be formed to allow uniform distribution of water to the entire irrigated acreage without undue impoundment (ponding).
Generally Recognized	When agricultural experts or the organic agricultural industry, as applicable, are aware of the production method or practice and there is no genuine dispute regarding whether the production method or practice allows the crop to make normal progress toward maturity and produce at least the yield used to determine the production guarantee or amount of insurance.
Gleaner	A person who harvests for free distribution to the needy, or for donation to a nonprofit organization for ultimate distribution to the needy, an agricultural crop that has been donated by the crop owner(s).
Good Farming Practice	The production methods utilized to produce the insured crop and allow it to make normal progress toward maturity and produce at least the yield used to determine the production guarantee or amount of insurance, including any adjustments for late planted acreage, which are: (1) for conventional or

Good Farming Practice (Continued)	sustainable farming practices, those generally recognized by agricultural experts for the area; or (2) for organic farming practices, those generally recognized by the organic agricultural industry for the area or contained in the organic plan. The AIP may determine whether or not production methods are considered to be good farming practices, or the AIP or the insured may request the AIP to contact FCIC to determine whether or not production methods will be considered to be “good farming practices."
Gross Production	For delivered production, the net delivered production of the commodity (removing truck weight and other weights which are considered tare from the gross scale weight) prior to adjustments for dockage, test weight, moisture content, poor quality, FM, etc. For farm-stored production, the amount of production in the storage structure, prior to adjustments for dockage, test weight, moisture content, poor quality, FM, etc. For APH purposes, gross production is adjusted the same as adjusted on the claim form, provided there are acceptable records for these adjustments.
Group Risk Plan (GRP)	A plan of insurance offered for certain crops in specific counties and states that compare an expected county average yield to the county yield for the insured year. A form of insurance coverage that provides protection against loss of crop production that affects an area rather than individual producers.
Guarantee (unit)	The guarantee for the unit expressed in the unit of measure for the crop (e.g., bushels, pounds, hundredweight, dollars, etc.) calculated by multiplying the total insured acres on the unit by the guarantee per acre times the insured’s share.
Harvest	To combine, thresh, cut, pick, dig, or otherwise remove the crop from the crop acreage. Refer to crop policy/endorsement/crop provisions for specific harvest definition for the crop.
Headed	When the plant’s head has emerged from the leaf sheath and is visible to the naked eye.
Heading	At least 50 percent of the crop has headed.
High-Risk Land	Land that has a loss frequency and severity potential that cannot be rated adequately on the standard rate table, such as a flood plain, high sand content soil, high aluminum toxicity soil, high sodium content soil, high alkali soil, peat soil, soil with high or low pH, etc.
Household	A domestic establishment including the members of a family (parents, brothers, sisters, children, spouse, grandchildren, aunts, uncles, nieces, nephews, first cousins, or grandparents, related by blood, adoption or marriage, are considered to be family members) and others who live under the same roof.
Indemnity	The dollar amount paid in the event of an insured loss.

EXHIBIT 1

DEFINTIONS

Indemnity Summary	A computer-generated document showing the insured's dollar amount of indemnity payment by crop and unit number.
Initially Planted	The first occurrence of planting the insured crop on insurable acreage for the crop year.
Initial Planting Date	The earliest calendar date that an insured commodity can be planted and qualify for a replanting payment if such payments are authorized by the crop provisions. (If planted prior to this date, the crop is not eligible for a replanting payment but is still insurable.)
Insurable Acreage	Acreage that meets all policy insurability requirements, regardless of whether or not such acreage is reported as "insured acres" by the acreage reporting date for the applicable insured crop.
Insurance Contract	A binding agreement between the AIP and the insured producer to insure an agricultural commodity and consisting of the accepted application, the Common Crop Insurance Policy (Basic Provisions), Crop Provisions, SPOIs, or other applicable endorsement or options, the actuarial documents for the insured agricultural commodity, the Catastrophic Risk Protection Endorsement, if applicable, and the applicable regulations published in 7 CFR Chapter IV. Insurance for each agricultural commodity in each county will constitute a separate policy.
Insurable Interest	The same meaning as the term “share” in the applicable crop insurance policy.
Insurance Period	The period during which liability for loss due to insured causes is assumed according to the applicable endorsement or policy.
Insurance Policy	Defines the rights and responsibilities of the insured and the AIP. Refer to Insurance Contract.
Insurance Premium	The dollar amount paid for insurance. (Does not include administrative fees.)
Insured	The named person as shown on the application accepted by the AIP. This term does not extend to any other person having a share or interest in the crop (for example, a partnership, landlord, or any other person) unless specifically indicated on the accepted application.
Insured Acres	Insurable acreage that is insured in accordance with the policy. This would include, but is not limited to: (1) Insurable acreage reported by the insured by the acreage reporting date; or (2) Insurable acreage of the insured crop reported by the insured after the acreage reporting date and the AIP accepts such acreage as allowed by the policy provisions and paragraph 74 of this handbook.
Insured Cause of Loss	An unavoidable cause of loss defined in the policy or endorsement for which an indemnity can be paid.

EXHIBIT 1

DEFINTIONS

Insured Crop	The crop in the county for which coverage is available under the insured's policy defined in the Basic Provisions and the applicable Crop Provisions, as shown on the application accepted by the AIP.
Interplanted	Acreage on which two or more crops are planted in a manner that does not permit separate agronomic maintenance or harvest of the insured crops.
Irrigated Practice	A method of producing a crop by which water is artificially applied during the growing season by appropriate systems and at the proper times, with the intention of providing the quantity of water needed to produce at least the yield used to establish the irrigated production guarantee or amount of insurance on the irrigated acreage planted to the insured crop.
Kansas City (RMA) Office	The national office responsible for the acceptance and processing of electronically transmitted data for the Federal crop insurance program, for issuing actuarial documents, for developing policy regulations and other related regulations, and for developing and issuing underwriting and loss adjustment standards/procedures.
Late-Filed Acreage Report	Any original acreage report obtained from the policyholder after the final ARD established by the Actuarial Documents.
Late-Filed Application	Any original application for insurance signed by the producer after the sales closing date established by the Actuarial Document Book.
Late-Filed Claim	Refer to Delayed Notice.
Late Planted	Acreage initially planted to the insured crop after the final planting date or as provided in some crop provisions, during the late planting period or if due to an insured cause occurring within the insurance period for PP coverage and PP provisions are applicable to the insured crop, the acreage is prevented from planting by the final planting date or during the late planting period (if applicable for the crop), but is planted after the late planting period (final planting date if a late planting period is not applicable).
Late Planting Coverage	Refer to PAR. 139.
Late Planting Period	For crop provisions providing automatic late-planting coverage, this is the period that begins the day after the final planting date for the insured crop and ends 25 days after the final planting date, unless otherwise specified in the crop provisions or SPOIs. For acreage planted during the late planting period, coverage is reduced according to the crop policy provisions (or SPOI, if applicable).
Legal Description	A specified section, township, and range (or parts thereof) as identified by a land survey.
Legal Entity or Person	Refer to PAR. 14.

EXHIBIT 1

DEFINTIONS

Level Election	The percentage of coverage selected by the insured from those offered by FCIC that is used to determine the production guarantee, premium, and dollar amount of insurance.
Liability	The dollar amount of insurance coverage used in the premium computation for the insured agricultural commodity. **NOTE:** However, for the purpose of determining a LAF or MIF, share will be excluded from liability.
Liability Adjustment Factor (LAF)	When the dollar claim (determined) liability (based on the actual information determined by the adjuster (excluding share) and recorded on the claim form) is greater than the dollar acreage report liability (based on the acreage information reported by the insured (excluding share)), divide the dollar acreage report liability by the dollar claim liability; e.g., acreage report liability of $1557 divided by claim (determined) liability of $2000 = .778500 LAF (1557/2000 = .778500 rounded to six places).
Loss Adjustment Contractor (LAC)	A person under a personal contract with the AIP who is authorized to perform loss adjustment and/or contract service activities and is reimbursed for services rendered.
Loss Ratio	The ratio of paid indemnities to net premium expressed as a percentage (i.e., 1.10, etc.).
Management of a Crop	Person or persons exercise control of the day-to-day operation (controls what and when to plant, till, cultivate, irrigate, fertilize, spray, and harvest) of producing and marketing the crop.
Measuring Wheel	An instrument composed of a handle, wheel, and counter that is used to measure ground area. As the wheel is moved along the ground, the counter measures the number of revolutions of the wheel and then is converted to acreage measurements.
MIF	An acronym for Misreported Information Factor. Factor used to reduce a replanting payment, prevented planting payment, or indemnity payment when liability (excluding share) for the unit has been under/over reported by more than 10% of the actual liability (excluding share) determined for the unit. Refer to PAR. 29 and Exhibit 18.
Multiple Peril Crop Insurance (MPCI)	Crop insurance policies, which generally cover more than one cause of loss and that are sold and serviced by reinsured companies.
NAP	An acronym for Non-Insured Assistance Program. NAP covers non-insured commercial crops or other agricultural commodities (except livestock) for which CAT Coverage is not available and that is produced for food or fiber. NAP provides coverage similar to what CAT coverage would be if the crop were insurable under multiple peril crop insurance.

DEFINTIONS

National Resources Conservation Services (NRCS)	Formerly the Soil Conservation Service.
Native sod	Acreage that has no record of being tilled (determined in accordance with FSA or other verifiable records acceptable to us) for the production of an annual crop on or before May 22, 2008, and on which the plant cover is composed principally of native grasses, grass-like plants, forbs, or shrubs suitable for grazing and browsing.
Negligence	The failure to use such care as a reasonably prudent and careful person would use under similar circumstances.
New Crop Program	The offering of insurance or reinsurance coverage by FCIC on a crop that has not previously been entitled to insurance or reinsurance coverage.
Next Level Supervision	A person authorized by the AIP to supervise employees, agents, contractors, or other functions as assigned by the AIP.
Non-contiguous	Acreage of an insured crop that is separated from other acreage of the same insured crop by land that is neither owned by the insured nor rented by the insured for cash or a crop share. However, acreage separated by only a public or private right-of-way, waterway, or an irrigation canal will be considered as contiguous.
Notice of Acceptance	Refer to Policy Confirmation.
Notice of Loss	The written notice required to be provided by the insured to the AIP not later than 72 hours after certain occurrences or 15 days after the end of the insurance period, whichever is earlier, as identified in the policy provisions. Refer to the Basic Provisions or the PP Handbook for the insured's required Notices of Prevented Planting.
Nurse Crop	Sometimes called companion crop. It is a crop planted into the same acreage as another crop, that is intended to be harvested separately, and which is planted to improve growing conditions for the crop with which it is grown.
Official File	Hard copy of all original documents for each insured maintained by the AIP in their headquarters or as otherwise specified in the AIPs Plan of Operations required by Appendix II of the Standard Reinsurance Agreement.
Offset	The act of deducting one amount from another amount.
Operator or Tenant	Refer to PAR. 12.

DEFINTIONS

Optional Unit	Further division of a basic unit as allowed and described by the Basic Provisions, Crop Provisions, or SPOIs. The insured must pay the surcharge for each optional unit that is shown in the actuarial documents. Refer to PAR. 55.
Organic Agricultural Industry	Persons who are employed by the following organizations: Appropriate Technology Transfer for Rural Areas, Sustainable Agriculture Research and Education or the Cooperative State Research, Education and Extension Service, the agricultural departments of universities, or other persons approved by FCIC, whose research or occupation is related to the specific organic crop or practice for which such expertise is sought.
Organic Crop	An agricultural commodity that is organically produced consistent with section 2103 of the Organic Foods Production Act of 1990 (7 U.S.C. 6502.)
Organic Farming Practice	A system of plant production practices used to produce an organic crop that is approved by a certifying agent in accordance with 7 CFR part 205.
Organic Plan	A written plan, in accordance with the National Organic Program published in 7 CFR part 205, that describes the organic farming practices that the insured and a certifying agent agree upon annually or at such other times as prescribed by the certifying agent.
Organic Standards	Standards in accordance with the Organic Foods Production Act of 1990 (7 U.S.C. 6501 et seq.) and 7 CFR part 205.
Original Acreage Report, or Raisin Tonnage Report	The initial report filed for a crop year, by crop, used to determine the liability, amount of coverage, and premium. (See Acreage Report).
Other Use	Using insured acreage in a manner that is different from the original intended use as provided in the insurance provisions for the crop.
Palmer Drought Severity Index	A meteorological index calculated by the National Weather Service to indicate prolonged and abnormal moisture deficiency or excess.
Perennial crop	A plant, bush, tree, or vine crop that has a life span of more than one year.
Person	Refer to PAR. 11.
Plan of Insurance	A type of a crop insurance contract such as a revenue or a group risk plan of insurance.
Planted Acreage	Land in which seed, plants, or trees have been placed appropriate for the insured crop and planting method, at the correct depth, into a seedbed that has been properly prepared for the planting method and production practice.

DEFINTIONS

Prairie Pothole National Priority Area	Consists of specific counties within the States of Iowa, Minnesota, Montana, North Dakota or South Dakota as specified on the RMA Web site at *http://www.rma.usda.gov/*, or a successor Web site, or the Farm Service Agency, Agricultural Resource Conservation Program 2–CRP (Revision 4), dated April 28, 2008, or a subsequent publication.
Priority Area	
Polar Planimeter	An instrument moved along boundaries on aerial photography. The instrument readings are used to convert photograph measurements to acreages.
Policy	See Insurance Contract.
Policy Confirmation	A form or document issued to the insured indicating that the application, cancellation, etc., has been accepted.
Policyholder	The individual or entity listed on the application and who has been accepted and issued coverage by the AIP.
Policyholder File or folder	The file(s) maintained for each insured. The file(s) contains copies of documents, such as, application, acreage report appraisal worksheets, claims, etc. (Also known as insured's contract file or folder.) Some AIPs may have a file folder that maintains sales documents and another file folder for loss files.
Policy Number	See Contract Number.
Power of Attorney	A document signed by the insured naming another party to act on behalf of the insured. For crop insurance purposes, this document may be specific to only certain transactions or all transactions involved with the crop insurance contract.
Practical to Replant	Refer to PAR. 65.
Practice	A special farming procedure or method, such as irrigated, summer fallow, continuous crop, etc., shown on the actuarial documents for which a separate premium rate and/or yield has been established.
Preliminary Inspection	A farm visit by an adjuster in which an appraisal is usually made on a part of an insured crop unit, and in some instances, written permission is given to make other use of or destroy the affected crop.
Preliminary Yield	The APH yield calculated by the agent prior to approval by the verifier. Preliminary yields are used to provide coverage estimates and premium quotations.
Premium Adjustment	A premium cost adjustment applicable to some policies, based on continuous favorable insurance experience or unfavorable insurance experience for the crop (also referred to as Experience Adjustment Factor).
Premium Discount	A reduction in the base premium rate for unit consolidation, good experience, as applicable, etc.

EXHIBIT 1

DEFINTIONS

Premium Subsidy	The portion of the base premium paid by FCIC for the level elected as authorized by law.
Prevented Planting	Failure to plant the insured crop with proper equipment by the final planting date designated in the SPOIs for the insured crop in the county. The insured may also be eligible for a prevented planting payment if the insured failed to plant the insured crop with the proper equipment within the late planting period. The insured must have been prevented from planting the insured crop due to an insured cause of loss that is general in the surrounding area and that prevents other producers from planting acreage with similar characteristics.
Previous Crop Year	The crop year immediately preceding the current crop year.
Price Election	The amounts contained in the SPOIs or an addendum thereto, that is the value per pound, bushel, ton, carton, or other applicable unit of measure for the purposes of determining premium and indemnity under the policy.
Prior Crop Year	Two or more crop years preceding the current crop year.
Prior APH Yield	The approved APH yield from the previous year's APH form.
Producer Premium	The insurance premium that a policyholder must pay after the subsidy is deducted.
Production Guarantee (Per Acre)	The number of pounds, bushels, tons, cartons, or other applicable units of measure determined by multiplying the approved yield per acre by the coverage level percentage elected by the insured. For some crops (e.g., onions, tomatoes), the guarantee per acre for harvested acreage is higher than the guarantee for unharvested acreage, or the guarantee may vary with the maturity (stage) of the crop. Also, if late planting provisions apply to the crop and crop acreage is planted during the late planting period, the guarantee will be reduced for the late-planted acreage in accordance with the applicable crop provisions (or SPOIs, if applicable). Refer to the crop provisions for specifics, by crop.
Production Not to Count	Harvested production of the same crop that is subtracted from the unit's production before the indemnity is computed.
Production Report	A written record showing the insured’s annual production and is used by the AIP to determine the insured’s yield in accordance with section 3 of the Basic Provisions. The report contains yield information for previous years, including planted acreage and harvested production. This report must be supported by written verifiable records from a warehouseman or buyer of the insured crop or by measurement of farm-stored production, or by other records of production approved by the AIP on an individual case basis.

EXHIBIT 1

DEFINTIONS

Production Reporting Date	The latest date production reports will be accepted for inclusion in the base period to be used to calculate an approved APH yield for the current crop year, and is the earlier of the ARD or 45 days after the earliest cancellation date for the crop for the current crop year, unless stated otherwise in the SPOIs.
Production to Count	Harvested and/or appraised quantities of a crop produced (including appraised production from uninsured causes of loss) from a unit, which are subtracted from the unit's production guarantee in computing an indemnity.
Prohibited Substance	Any biological, chemical, or other agent that is prohibited from use or is not included in the organic standards for use on any certified organic, transitional or buffer zone acreage. Lists of such substances are contained at 7 CFR part 205.
Quality Assurance	An established review process maintained by the AIP to inspect and document the performance of its operations, employees, and adjusters. (This review process is also known as quality control.)
Quality Adjustment Factor	A factor used to reduce production to count when the policy allows for reduction of production to count and the production grades at or lower than the specified quality stated in the policy.
Raisin Tonnage Report	Refer to Acreage Report.
Range	All of the six-section north/south rows of a township identified as being east or west of the principal meridian.
Recognized Good Farming Practices	Refer to Good Farming Practice
Reduction in Value (RIV)	The dollar and cents RIV (discount) that the buyer applies for each quality defect of the crop allowed by the policy provisions. The RIV applies only when there is at least one type or level of defect for which there is not a pre-established discount factor listed in the quality section of the SPOIs.
Regional Office (RO)	Regional Office(s) of the Risk Management Agency. For the assigned states, the RO performs program and underwriting services for the crop insurance program.
Reinsured Company	Private insurance companies selling and adjusting multiple peril crop insurance reinsured by FCIC. Also known as AIP.
Relative	An individual who: (1) is a parent, brother, sister, child, spouse, grandchild, or grandparent; or (2) either resides in the household of, or engages in business with respect to a farming operation with, the person in question regardless of whether or not the individual is related by blood, adoption, or marriage.
Releasing Agent	Refer to Ceding Agent.

DEFINTIONS

Replant Claim	An insurance document submitted by the insured after an inspection that records the number of acres replanted, not replanted, and the cost of replanting any damaged acres from which a replant indemnity will be computed.
Replanted Crop	The same agricultural commodity replanted on the same acreage as the first insured crop for harvest in the same crop year if the replanting is specifically made optional by the policy and the insured elects to replant the crop and insure it under the policy covering the first insured crop, or replanting is required by the policy.
Replanting	Performing the cultural practices necessary to prepare the land to replace the seed or plants of the damaged or destroyed insured crop, and then replacing the seed or plants of the same crop in the same insured acreage. The same crop does not necessarily mean the same type or variety of the crop unless different types or varieties constitute separate crops or it is otherwise specified in the policy.
Replant Payment	The payment received when acreage qualifies for a replanting payment in accordance with the Basic Provisions and applicable crop provisions.
Reported Damage or Loss	A responsibility of the insured to promptly notify the Service Office Representative (agent) of any probable crop damage or loss.
Representative	Any person authorized by the AIP to work in the field or in an office to carry out in whole or in part the Federal crop insurance marketing, or contract servicing for new applicants or present policyholders. See Agent.
Representative Sample	Portions of the insured crop that must remain in the field for examination and review by the AIP's adjuster when making a crop appraisal, as specified in the Crop Provisions. In certain instances, the AIP may allow the insured to harvest the crop and require only that samples of the crop residue be left in the field. (This is not the same thing as Representative Sample Areas, as specified below.)
Representative Sample Areas	Refer to PAR. 88.
Representative Strips (Sample)	Strips of the unharvested crop that the insured is required, in accordance with policy provisions, to leave if damage is initially discovered within 15 days of or during harvest.
Revised Acreage Report or Raisin Tonnage Report	Completed when changes and/or corrections are made to the original acreage or tonnage report. Revised acreage reports (tonnage reports) prepared after the acreage (tonnage) reporting date, must be approved by the AIP before they are processed.
Risk Classification	Classification provided for each individual and crop that is used in the premium calculation for the crop. This classification may be based on the individual’s actual yield history, master yield, land, and/or other factors.

EXHIBIT 1

DEFINTIONS

RMA	An acronym for Risk Management Agency. RMA administers the Federal crop insurance program.
Sales Closing Date	The last date for the crop year that a producer may apply for insurance on a crop in a specific county and the last date by which an insured may change the crop insurance coverage for a crop year.
Scale Ruler	A calibrated ruler for use with tapes graduated in chains and feet. Scale rulers for chains are graduated in 660 feet (60 parts to inch and 2,000 feet (75.7 parts to inch.) A tool that can be used by FSA to determine acreage measurements.
Second crop	With respect to a single crop year, the next occurrence of planting any agricultural commodity for harvest following a first insured crop on the same acreage. The second crop may be the same or a different agricultural commodity as the first insured crop, except the term does not include a replanted crop. A cover crop, planted after a first insured crop and planted for the purpose of haying, grazing or otherwise harvesting in any manner or that is hayed or grazed during the crop year, or that is otherwise harvested is considered to be a second crop. A cover crop that is covered by FSA's noninsured crop disaster assistance program (NAP), or receives other USDA benefits associated with forage crops, will be considered as planted for the purpose of haying, grazing or otherwise harvesting. A crop meeting the conditions stated herein will be considered to be a second crop regardless of whether or not it is insured. Notwithstanding the references to haying and grazing as harvesting in the Basic Provisions, for the purpose of determining the end of the insurance period, harvest of the crop will be as defined in the applicable Crop Provisions.
Section	Refer to PAR. 55.
Share	Refer to PAR. 13.
Sketch Map	A diagram showing where fields or production are located.
Special Provisions of Insurance (SPOIs)	The part of the policy (contained in the county actuarial documents) that contains specific provisions of insurance for each insured crop that may vary by geographic area; e.g., planting dates, rotational requirements, exclusions to the policy, etc.
Special Report	A form used to record facts; e.g., used as an attachment to claims or acreage reports when there is not enough room in the narrative to record required documentation and for additional documentation regarding controversial claims, unusual cases, uninsured causes, not following good farming practices, etc.
Standard Reinsurance Agreement	The agreement between an AIP and FCIC by which the insurer cedes to FCIC certain liabilities arising from the insurer's sales of insurance policies in return for a portion of premium monies and administrative expense reimbursements.

EXHIBIT 1

DEFINTIONS

SSN or EIN	The social security number or Employer Identification Number used on insurance application forms to track an insured entity's insurance history. Insurance coverage cannot be offered if the SSN or EIN is not provided by the prospective insured.
State Premium Subsidy	The portion of the premium paid by the state, when applicable.
Sub-field	A part of a field where damage is so variable within the field that smaller divisions of the field are necessary in order to make accurate appraisals.
Substantial Beneficial Interest (SBI)	An interest held by any person of at least 10 percent in the applicant or insured. The spouse of any individual applicant or individual insured will be considered to have a SBI in the applicant or insured unless the spouses can prove they are legally separated or otherwise legally separate under state law. Any child of an individual applicant or individual insured will not be considered to have a SBI in the applicant or insured unless the child has a separate legal interest in such person. For example, there are two partnerships that each have a 50 percent interest in the insured and each partnership is made up of two individuals, each with a 50 percent share in the partnership. In this case, each individual would be considered to have a 25 percent interest in the insured, and both the partnerships and the individuals would have a SBI in the insured (The spouses of the individuals would not be considered to have a SBI unless the spouse was one of the individuals that made up the partnership). However, if each partnership is made up of six individuals with equal interests, then each would only have an 8.33 percent interest in the insured and although the partnership would still have a SBI in the insured, the individuals would not for the purposes of reporting SBIs.
Successor-In-Interest Entity	A successor entity that is entitled to receive all of the experience earned by the previous entity, as determined by the AIP.
Summary of Coverage	Our statement to the insured, based upon the insured's acreage report, specifying the insured crop and the guarantee or amount of insurance coverage provided by unit.
Sustainable Farming Practice	A system or process for producing an agricultural commodity, excluding organic farming practices, that is necessary to produce the crop and is generally recognized by agricultural experts for the area to conserve or enhance natural resources and the environment.
Tenant	A person who rents land from another person for a share of the crop or a share of the proceeds of the crop (see the definition of “share” above).
Termination for Indebtedness Date	The date specified in the crop policy or endorsement on which the insurance contract is subject to termination because of failure of the insured to pay the premium and/or administrative fee in full prior to this date.

DEFINTIONS

Tilled	The termination of existing plants by plowing, disking, burning, application of chemicals, or by other means to prepare acreage for the production of an annual crop.
Timely Planted	Planted on or before the final planting date designated in the SPOIs for the insured crop in the county.
Township	A tract of land approximately 6 miles square containing approximately 36 sections, each 1 mile square.
Transfer of Coverage	Refer to Transfer of Indemnity.
Transfer of Contract/Policy	Transfer of a contract or policy to another AIP.
Transfer of Indemnity	A form signed by the insured that transfers the right to an indemnity payment to another party when land ownership or interest has been transferred on part or all of a unit.
Transferee	One who receives an insured right to an indemnity from another party.
Transferor	An insured who transfers an insured right to an indemnity to another party.
Transitional Acreage	Acreage on which organic farming practices are being followed that does not yet qualify to be designated as organic acreage.
Uninsured Acres	Uninsurable acreage and insurable acreage that is not insured in accordance with the policy provisions.
Uninsurable Acreage	Acreage of an insured crop that does not meet the policy requirements for insurance. Such acreage is entered as “Uninsured Acres” on the acreage report.
Unit	An identifiable, insurable segment of land on which an insurable crop is grown and separate production records have been kept, and meets other guidelines defined in the crop policy; endorsement or option, if applicable; and/or SPOIs.
Unrated Land	Land which is not rated on the actuarial map or actuarial listing, requiring a Written Agreement (sometimes known as unclassified or uninsurable).
USDA	An acronym for United States Department of Agriculture.
Varying Share	A landlord-tenant agreement that allows for different crop shares within the same unit.
Verifier	Individual or organization authorized by FCIC to verify APH records and data furnished by the insured to the AIP in order to calculate and determine the approved APH yield.

EXHIBIT 1

DEFINTIONS

Verify	Determine by an on-site inspection, whether information submitted is true and accurate through independent means in accordance with procedures. With respect to certifications, asking the provider of the information whether the information is true and accurate does not constitute verification. Information from independent third parties or independent documentation must be obtained.
Void	When the policy is considered not to have existed for a crop year as a result of concealment, fraud, or misrepresentation.
Whole Farm Unit	All insurable acreage of two or more insured crops planted in the county in which the insured has a share on the date coverage begins for each crop for the crop year. All crops for which the whole farm unit structure is available must be included in the whole farm unit. At least two of the insured crops must each constitute at least 10 percent of the total liability of all insured crops in the whole farm unit, and all crops in the unit must be insured under the same plan of insurance and with the same AIP, unless specified otherwise in the individual crop provisions or SPOIs. (For this definition under CRC and RA plans of insurance, see the applicable Basic Provisions for these plans of insurance.)
Written Agreement	A written agreement between the AIP and the insured that alters designated terms of an additional coverage policy and that is authorized under the basic provisions, the crop provisions, or the SPOIs for the insured crop.
Zero Acreage Report	An acreage report filed by an insured that certifies that the insured does not have a share in insurable acres of the crop for that crop year.

EXHIBIT 2
CROP POLICY INFORMATION

2010 CY INFORMATION (or 2011 CY where designated). ***Crop***	***Crop Code***	***FCIC***		***NCIS***		***APH, ARH, or Dollar ($)***	***Late Planting Prov.***	***Prev. Planting Prov.***	***** Replant Payment Prov.***	******Enterprise (E) ** Optional (O) Basic (B) Unit***	***** High-Risk Land Ex. Opt.***
		****Basic Provisions***	****Crop Provisions***	****Basic Provisions***	****Crop Provisions***						
Almonds	0028	05-BR	08-028	2005-700B	2008-719	APH	No	No	No	B/O	Yes 1/
Apples	0054	05-BR	05-054 (Rev. 10/04)	2005-700B	2005-721	APH	No	No	No	B/O	Yes 1/
Avocados (Pilot - California Only) 4/	0019	05-BR	2010-0019	2005-700B	2010- 807	APH	No	No	No	B/O	Yes 1/
Avocados (Pilot - Florida Only)	0019	05-BR	99-019A	2005-700B	1999-808	APH	No	No	No	B/O by type	Yes 1/
Beans (Processing)	0046	05-BR	98-046	2005-700B	1998-704	APH	Yes 2/	Yes 2/	No	B/O/O by type	Yes 1/
Blueberries	0012	05-BR	05-012	2005-700B	2005-794	APH	No	No	No	B/O by type 3/	Yes 1/
Cabbage ***	0072	05-BR	10-0072	2005-700B	2010-810	APH	No	No	Yes	B/O by type 3/	Yes 1/
Canola/Rapeseed	0015	05-BR	98-015	2005-700B	1998-795	APH	Yes 2/	Yes 2/	Yes	B/O	Yes 1/
ARH Cherries (Pilot)	0057	05-BR	2009-057	2005-700B	2009-812	ARH	No	No	No	B/O	Yes 1/
Chile Peppers, Processing (Pilot)	0045	05-BR	00-045	2005-700B	2000-832	$	No	No	No	B/O by Type by county	Yes 1/
***	***	***	***	***	***	***	***	***	***	***	***
ARH Citrus (Pilot)	0215	05-BR	2011-0215 47	2005-700B	2011-922	ARH	No	No	No	B/O	Yes 1/
Citrus (AZ & CA) 4/											
Grapefruit	0201	05-BR	00-126	2005-700B	2000-731	APH	No	No	No	B by Crop/O	Yes 1/
Lemons	0202										
Mandarin	0205										
Minneola Tangelos	0206										
Navel Oranges	0215										
Sweet Oranges	0216										
Valencia Oranges	0217										
Orlando Tangelos	0237										
Kinnow Mandarins	0239										

1/ Requires insured's signature. Refer to the CADB to determine land designated as high risk.

2/ Refer to Part 5 for additional LP and instructions and the Prevented Planting Handbook for additional PP instructions. 3/ Optional units allowed by type if on SPOIs. 4/ 2011 Crop Year Information

***Current, up to signature date of this handbook. **Applies to additional coverage ONLY. *** Enterprise units if provided for in the SPOIs.**

Unit structures are as identified unless otherwise specified in the SPOIs. For pilot crops, only selected states and counties apply.

EXHIBIT 2
CROP POLICY INFORMATION

***2010* CY INFORMATION (or *2011* CY where designated)**	**Crop Code**	**FCIC**		**NCIS**		**APH or Dollar ($)**	**Late Planting Prov.**	**Prev. Planting Prov.**	**** Replant Payment Prov.**	***Enterprise (E) Optional (O) Basic (B) Unit**	**** High-Risk Land Ex. Opt.**
Crop		***Basic Provisions**	***Crop Provisions**	***Basic Provisions**	***Crop Provisions**						
Citrus Fruit (Florida) Citrus I (Early/Mid Season Orange Citrus II (Late Oranges – Juice) Citrus III (Grapefruit – Juice) Citrus IV (Tangelos &Tangerines Citrus V (Murcott Honey Oranges & Temple Oranges) Citrus VI (Lemons & Limes) Citrus VII (Grapefruit & Late Oranges -Fresh) Citrus VIII(Navel Oranges)	0245 0246 0247 0248 0249 0250 0251 0252	05-BR	09-026	2005-700B	2009-724	$	No	No	No	B by crop/O	Yes 1/
Citrus Fruit (Texas) 5/ Early & Midseason Oranges Late Oranges All Other Grapefruit Ruby Red Grapefruit Rio Red & Star Ruby Grapefruit	0224 0225 0226 0228 0238	05-BR	00-226	2005-700B	2000-733	APH	No	No	No	B/O by crop	Yes 1/
Citrus Trees (Texas) Citrus Trees I Citrus Trees II Citrus Trees III Citrus Trees IV Citrus Trees V	0240 0241 0242 0243 0244	05-BR	99-025	2005-700B	1999-737	$	No	No	No	B/O	Yes 1/
Cultivated Clams (Pilot)	0116	05-BR	08-0116	2005-700B	2008-882	$	No	No	Yes	B/O	Yes 1/
Coarse Grains Corn Grain Sorghum Soybeans	0041 0051 0081	05-BR	98-041	2005-700B	1998-702	APH	Yes 2/	Yes 2/	Yes	B/O/E	Yes 1/
Cotton	0021	05-BR	99-021	2005-700B	1999-703	APH	Yes 2/	Yes 2/	No	B/O/E	Yes 1/
Cotton (ELS)	0022	05-BR	99-022	2005-700B	1999-745	APH	No	Yes 2/	No	B/O	Yes 1/
Cranberries	0058	05-BR	99-058	2005-700B	1999-742	APH	No	No	No	B/O	Yes 1/
Dry Beans	0047	05-BR	98-047	2005-700B	1998-712	APH	Yes 2/	Yes 2/	Yes	B/O/O by type	Yes 1, 3/
Figs	0060	05-BR	01-060	2005-700B	2001-792	APH	No	No	No	B by type/O	Yes 1/

1/ Requires Insured's Signature. Refer to the CADB to determine land designated as high risk. 2/ Refer to Part 5 for additional LP instructions, and Prevented Planting Handbook for additional PP instructions.

3/ Not available in Idaho, Oregon, Utah, and Washington **4/ Basic unit by planting period.**

***Current, up to signature date of this handbook. 5/ For 2011 crop year information. ** Applies to additional Coverage ONLY. *** Enterprise units if provided for in the SPOIs.**

Unit structures are as identified unless otherwise specified in the SPOIs. For pilot crops counties, only selected counties apply.

EXHIBIT 2
CROP POLICY INFORMATION

***2010* CY INFORMATION (or *2011* CY where designated)**	***Crop Code***	***FCIC***		***NCIS***		***APH or Dollar ($)***	***Late Planting Prov.***	***Prev. Planting Prov.***	***** Replant Payment Prov.***	******Enterprise (E) ** Optional (O) Basic (B) Unit***	***** High-Risk Land Ex. Opt.***
Crop		****Basic Provisions***	****Crop Provisions***	****Basic Provisions***	****Crop Provisions***						
Florida Fruit Trees (Pilot) Avocado Trees Orange Trees Grapefruit Trees Lemon Trees Lime Trees All Other Citrus Trees Carambola Trees Mango Trees	 0212 0207 0208 0209 0210 0211 0213 0214	05-BR	08-0014	2005-700B	2008-748	$	No	No	No	B/O by county	Yes 1/
Forage Production	0033	05-BR	01-033 (Rev. 3/2000)	2005-700B	2001-729	APH	No	No	No	B/O	Yes 1/
Forage Seeding	0032	05-BR	04-032	2005-700B	2004-730	$	No	No	Yes	B/O	Yes 1/
Forage Seed (Pilot) Alfalfa Seed	0107	05-BR	07-0107	2005-700B	2007-886	$	No	No	No	B/O/O by contract or by variety 4/	Yes 1/
Grapes	0053	05-BR	10-0053	2005-700B	2010-717	APH	No	No	No	B/O Type 3/	Yes 1/
Grapes, Table	0052	05-BR	10-0052	2005-700B	2010-741	APH	No	No	No	B/O Type 3/	Yes 1/
Hawaii Tropical Fruit (Pilot) Bananas Coffee Papaya	 0255 0256 0257	05-BR	10-0255	2005-700B	2010-892	APH	No	No	No	B/O 6/	Yes 1/
Hawaii Tropical Trees (Pilot) Banana trees Coffee trees Papaya trees	 0265 0266 0267	05-BR	09-0265A	2005-700B	2009-894	Tree based/ $ plan	No	No	No	B/O 7/	Yes 1/
Hybrid Seed Corn	0062	05-BR	98-062	2005-700B	1998-738	$	Yes 2/	Yes 2/	No	B/O	Yes 1/
Hybrid Sorghum Seed	0050	05-BR	98-050	2005-700B	1998-797	$	Yes 2/	Yes 2/	No	B/O	Yes 1/
Macadamia Nuts 8/	0023	05-BR	00-023	2005-700B	2000-790	APH	No	No	No	B/O	Yes 1/
Macadamia Trees	0024	05-BR	99-024 (rev. 6/98)	2005-700B	1999-791	$	No	No	No	B/O	Yes 1/
Millet	0017	05-BR	08-017	2005-700B	2008-789	APH	Yes 2/	Yes 2/	No	B/O	Yes 1/
Mint	0074	05-BR	08-074	2005-700B	2008-828	APH	No	No	No	B/O by county	Yes 1/

1/ Requires Insured's Signature. Refer to the CADB to determine land designated as high risk. 2/ Refer to Part 5 for additional LP instructions, and the Prevented Planting Handbook for additional PP instructions. 3/ Basic unit by variety in CA/Optional units by non-contiguous land only - All other states B/O units. 4/ Optional unit by contract or variety only if permitted by the SPOIs
5/ BY type if allowed by SPOIs. 6/ Optional units (unless limited by the SPOIs) for noncontiguous land (except papaya), type, if types specified in the SPOIs), and harvest period, for bananas. 7/ Optional units (unless limited by the SPOIs for: Noncontiguous land (except papaya) and Type (if types specified on the SPOIs).
8/ For 2011 crop year information.

***Current, up to signature date of this handbook. . ** Applies to additional Coverage ONLY. ***Enterprise units if provided by SPOIs.**

Unit structures are as identified unless otherwise specified in the SPOIs. For pilot crops, only selected states and counties apply.

EXHIBIT 2
CROP POLICY INFORMATION

***2010** CY INFORMATION (or **2011** CY where designated)*	*Crop Code*	*FCIC*		*NCIS*		*APH or Dollar ($)*	*Late Planting Prov.*	*Prev. Planting Prov.*	*** Replant Payment Prov.*	****Enterprise (E)* ** Optional (O) Basic (B) Unit*	*** High-Risk Land Ex. Opt.*
Crop		**Basic Provisions*	**Crop Provisions*	**Basic Provisions*	**Crop Provisions*						
Mustard	0069	05-BR	09-069	2005-700B	2009-816	APH	Yes 2/	Yes 2/	Yes	B/O by county 5/	Yes 1/
Nursery (Container/Field Grown)	0073	05-BR	08-073 (Rev. 10-06)	2005-700B	2008-782	$	No	No	No	Share/plant/type	Yes 1/
Onions	0013	05-BR	00-013 (rev. 6/30/99)	2005-700B	2000-709	APH	Yes 2/	Yes 2/	Yes	B/O/O by type	Yes 1/
Peaches	0034	05-BR	01-034	2005-700B	2001-720	APH	No	No	No	B/O	Yes 1/
Peanuts	0075	05-BR	07-075	2005-700B	2007-718	APH	Yes 2/	Yes 2/	Yes	B/O	Yes 1/
Pears	0089	05-BR	01-089	2005-700B	2001-715	APH	No	No	No	B/O	Yes 1/
Peas Dry Green	 0067 0064	 05-BR 05-BR	 09-067 98-064	 2005-700B 2005-700B	 2009-713-D 1998-713-G	 APH APH	 Yes 2/ Yes 2/	 Yes 2/ Yes 2/	 Yes No	B/O/O by Type	Yes 1/
Pecans	0020	05-BR	05-020	2005-700B	2005-802	$	No	No	No	B by county	Yes 1/
Peppers, (Fresh Market)	0083	05-BR	99-083	2005-700B	1999-740	$	No	No	Yes	B/O	Yes 1/
Plums	0092	05-BR	01-092	2005-700B	2001-706	APH	No	No	No	B/O	Yes 1/
Popcorn	0043	05-BR	99-043	2005-700B	1999-744	APH	Yes 2/	Yes 2/	Yes	B/O	Yes 1/
Potatoes (Central/Southern)	0084	05-BR	09-0284	2005-700B	2009-734 CS	APH	Yes 2/	Yes 2/	No	B/O	Yes 1/
Potatoes (Northern)	0084	05-BR	08-184	2005-700B	2008-734N	APH	Yes 2/	Yes 2/	No	B/O	Yes 1/
Prunes	0036	05-BR	01-036	2005-700B	2001-747	APH	No	No	No	B/O 3/	Yes 1/
Processing Pumpkins (Pilot)	0147	05-BR	09-0147	2005-700B	2009-821	APH	No	No	No	B by contract	Yes 1/
Raisins	0037	05-BR	98-037	2005-700B	1998-723	$	No	No	No	B by variety /O 6/	Yes 1/
Rice	0018	05-BR	01-018	2005-700B	2001-716	APH	Yes 2/	Yes 2/	Yes	B/O	Yes 1/
Safflower	0049	05-BR	98-049 (rev. 12-97)	2005-700B	1998-749 (rev. 1/98)	APH	Yes 2/	Yes 2/	Yes	B/O	Yes 1/
Silage Sorghum Pilot	0059	05-BR	09-Silage Sorghum Endorsement	2005-700B	702-SS	APH	Yes 2/	Yes 2/	Yes	B/O/E	Yes 1/
Small Grains Barley Buckwheat Flax Oats Rye Wheat	 0091 0010 0031 0016 0094 0011	05-BR	04-011	2005-700B	2004-714	APH	Yes 2/	Yes 2/	Yes 5/	B/O/E	Yes 1/

1/ Requires Insured's Signature Refer to the CADB to determine land designated as high risk. 2/ Refer to Part 5 for additional LP instructions, and Prevented Planting Handbook for additional PP instructions. 3/ Unless limited by Crop Provisions or SPOIs. 4/ Not available in Utah or Idaho. 5/ Not available when SPOIs for the crop/county has only a fall planting date for the small grain crop. 6/ Optional units only by non-contiguous land. For pilot crops, only selected states and counties apply.

***Current, up to signature date of this handbook. ** Applies to additional Coverage ONLY. *** Enterprise units if provided for in the SPOIs. Unit structures are as identified unless otherwise specified in the SPOIs.**

EXHIBIT 2
CROP POLICY INFORMATION

2010 CY INFORMATION (or 2011 CY where designated)	***Crop Code***	***FCIC***		***NCIS***		***APH or Dollar ($)***	***Late Planting Prov.***	***Prev. Planting Prov.***	** ***Replant Payment Prov.***	***** ***Enterprise (E)*** ****Optional (O)*** ***Basic (B) Unit***	** ***High-Risk Land Ex. Opt.***
Crop		***Basic Provisions***	***Crop Provisions***	***Basic Provisions***	***Crop Provisions***						
Stonefruit 5/ Fresh Apricots Processing Apricots Fresh Nectarine Processing Cling Peaches Processing Freestone Peaches Fresh Freestone Peaches	 0218 0219 0220 0221 0222 0223	05-BR	01-077	2005-700B	2001-796	APH	No	No	No	B/O by type/variety	Yes 1/
Sugar Beets 6/	0039	05-BR	98-039	2005700B	1998-707	APH	Yes 2, 3/	Yes 2, 3/	Yes	B/O	Yes 1, 4/
Sugarcane	0038	05-BR	04-038	2005-700B	2004-732	APH	No	No	No	B/O	Yes 1/
Sunflower Seed	0078	05-BR	98-078	2005-700B	1998-708	APH	Yes 2/	Yes 2/	Yes	B/O	Yes 1/
Sweet Corn (Processing)	0042	05-BR	98-042	2005-700B	1998-728	APH	Yes 2/	Yes 2/	No	B/O	Yes 1/
Sweet Corn (Fresh Market)	0044	05-BR	08-0044	2005-700B	2008-746	$	No	No	Yes	B/O	Yes 1/
***	***	***	***	***	***	***	***	***	***	***	***
Tobacco *** Flue Cured Fire Cured Burley Maryland Dark Air Cigar Filler Cigar Binder Cigar Wrapper	 0229 0230 0231 0232 0233 0234 0235 0236	05-BR	10-0071	2005-700B	2010-736	APH	Yes 2/	Yes	No	B by type/FSN O/E if allowed by the SPOIs	Yes 1/
***	***	***	***	***	***	***	***	***	***	***	***
Tomatoes (Fresh Market Guar. Prod.)	0086	05-BR	99-186	2005-700B	1998-722	APH	No	No	Yes	B/O	Yes 1/
Tomatoes (Fresh Market Dollar Plan)	0086	05-BR	99-086	2005-700B	1999-739	$	No	No	Yes	B/O	Yes 1/
Tomatoes (Processing)	0087	05-BR	05-87	2005-700B	2005-727	APH	No	No	Yes	B/O	Yes 1/
Walnuts	0029	05-BR	08-029	2005-700B	2008-743	APH	No	No	No	B/O	Yes 1/

1/ Requires insured's signature. Refer to the CADB to determine land designated as high risk.

2/ Refer to Part 5 for additional LP instructions, and the Prevented Planting Handbook for additional PP instructions. 3/ Late and Prevented Planted is not applicable in California Counties with a July 15th Cancellation Date. 4/ Not available in Colorado. 5 Optional Units by contiguous land (unless limited by SPOI)
6/ Late and prevented planting provisions not applicable in California counties with a July 15th Cancellation Date. *** Current, up to signature date of this handbook**
****Applies to additional Coverage ONLY. *** Enterprise units, if provided for in the SPs. Unit structures are as identified unless otherwise specified in the SPs.**

EXHIBIT 2
CROP POLICY INFORMATION

2010 CY INFORMATION (or 2011 CY where designated)	***Crop Code***	***FCIC***		***NCIS***		***APH or Dollar ($)***	***Late Planting Prov.***	***Prev. Planting Prov.***	** ***Replant Payment Prov.***	***** ***Enterprise (E) **Optional (O) Basic (B) Unit***	** ***High-Risk Land Ex. Opt.***
Crop		****Basic Provisions***	****Crop Provisions***	****Basic Provisions***	****Crop Provisions***						
(Cultivated) Wild Rice ***	0055	05-BR	09-0055	2005-700B	2009-820	APH	No	No	No	B/O 2/	Yes 1/
Catastrophic Risk Protection Endorsement		1/	09-CAT	1/	2009-777 1/	N/A	N/A	N/A	N/A	N/A	No

1/ Endorsement attaches to Basic Provisions and specific crop policies when CAT coverage is selected by the insured.

2/ Basic only in MN – Basic/Optional in CA.

3/ Requires insured's signature. Refer to the CADB to determine land designated as high risk.

Current, up to signature date of this handbook. Unit structures are as identified unless otherwise specified in the SPOIs.

EXHIBIT 2
CROP POLICY INFORMATION

2010 CY INFORMATION (or 2011 CY where designated)		*FCIC*		*NCIS*		*Expected County Yield*	*Late Planting Prov.*	*Prev. Planting Prov.*	*Replant Payment Prov.*	*Unit of Measure*	*Unit by County/ (C) Basic (B)/ Optional (O) Enterprise (E) Whole Farm (WF)*	*High-Risk Land Ex. Option*
INSURANCE PLANS / *Crop*	*Crop Code*	**Basic Provisions*	**Crop Provisions*	**Basic Provisions*	**Crop Provisions*							
Group Risk Protection (GRP)												
Corn	0041	09-102	00-141	2009-950	2000-954	Yes	No	No	No	bu.	C	No
Cotton	0021	09-102	00-121	2009-950	2000-956	Yes	No	No	No	lbs.	C	No
Forage Production	0033	09-102	00-133	2009-950	2000-942	Yes	No	No	No	tons	C	No
Oysters	0115	09-GRP-Oysters	N/A	2009 969	N/A	Yes	No	No	No	lbs.	C	No
Peanuts	0075	09-102	00-175	2009-950	2000-960	Yes	No	No	No	lbs.	C	No
Sugarcane	0038	09-102	09-GRP-Sugarcane	2009-950	2009 966	Yes	No	No	No	lbs.	C	No
Sorghum	0051	09-102	00-151	2009-950	2000-962	Yes	No	No	No	bu.	C	No
Soybeans	0081	09-102	00-181	2009-950	2000-964	Yes	No	No	No	bu.	C	No
Wheat	0011	09-102	00-111	2009-950	2000-941	Yes	No	No	No	bu.	C	No
Group Risk Income Protection (GRIP)												
Corn	0041	05-GRIP-BASIC	06-GRIP-Corn	2005- 950-GRIP	2006-954-GRIP	Yes	No	No	No	bu.$	C	No
Cotton	0021	05-GRIP-BASIC	06-GRIP-Cotton	2005-950-GRIP	2006-956-GRIP	Yes	No	No	No	lbs./$	C	No
Grain Sorghum	0051	05-GRIP-BASIC	05-GRIP-Grain Sorghum	2005- 950-GRIP	2005-962-GRIP	Yes	No	No	No	bu./$	C	No
Soybeans	0081	05-GRIP-BASIC	06-GRIP-Soybeans	2005-950-GRIP	2006-964-GRIP	Yes	No	No	No	bu./$	C	No
Wheat	0011	05-GRIP-BASIC	06-GRIP-Wheat	2005-950-GRIP	2006-941-GRIP	Yes	No	No	No	bu./$	C	No

1/ ONLY available for Additional Coverage ONLY. 2/ Refer to Part 5 for additional LP instructions and the Prevented Planting Handbook for additional PP instructions.

3/ High-risk land not insurable under IP policy; however, the high-risk land may be insured under an MPCI policy. GRP, IP, CRC and RA insurance plans, if elected, meet the FSA linkage requirements. For pilot crops, only selected states and counties apply.

***Current, up to signature date of this handbook. ** Applies to additional coverage ONLY**. Unit structures are as identified unless otherwise specified in the SPOIs.

EXHIBIT 2
CROP POLICY INFORMATION

2010 CY INFORMATION (or 2011 CY where designated)		*FCIC*		*NCIS*		*Expected County Yield*	*Late Planting Prov.*	*Prev. Planting Prov.*	*Replant Payment Prov.*	*Unit of Measure*	*Unit by County/ (C) Basic (B)/ Optional (O) Enterprise (E) Whole Farm (WF)*	*High-Risk Land Ex. Option*
INSURANCE PLANS / *Crop*	Crop Code	**Basic Provisions*	**Crop Provisions*	**Basic Provisions*	**Crop Provisions*							
INCOME PROTECTION (IP)												
Barley (Pilot)	0091	05-BR	2004-391	2005-700-B	2004-714B-IP	APH/$	Yes 2/	Yes 2/	No	bu/$	E	No 3/
Corn (Pilot)	0041	05-BR	2002-341	2005-700-B	2002-702C-IP	APH/$	Yes 2/	Yes 2/	1/	bu./$	E	No 3/
Cotton (Pilot)	0021	05-BR	2002-321	2005-700-B	2002-703-IP	APH/$	Yes 2/	Yes 2/	No	lbs./$	E	No 3/
Grain Sorghum (Pilot)	0051	05-BR	2002-351	2005-700-B	2002-702G-IP	APH/$	Yes 2/	Yes 2/	Yes 1/	bu./$	E	No 3/
Soybeans (Pilot)	0081	05-BR	2002-381	2005-700-B	2002-702S-IP	APH/$	Yes 2/	Yes 2/	Yes 1/	bu./$	E	No 3/
Wheat (Pilot)	0011	05-BR	2004-311	2005-700-B	2005-714W-IP	APH/$	Yes 2/	Yes 2/	1/	bu./$	E	No 3/
CROP REVENUE COVERAGE (CRC)												
Corn 1/	0041	05-CRC-BASIC	02-CRC-CG (9/26/01)	2005 -700B-CRC	2002-702-CRC	APH/$	Yes 2/	Yes 2/	Yes	bu./$	B/O/E	Yes 4/
Cotton 1/	0021	05-CRC-BASIC	02-CRC-021 (9/26/01)	2005 -700B-CRC	2002-703-CRC	APH/$	Yes 2/	Yes 2/	No	lb./$	B/O/E	Yes 4/
Grain Sorghum 1/	0051	05-CRC-BASIC	02-CRC-CG (9/26/01)	2005- 700B-CRC	2002-702-CRC	APH/$	Yes 2/	Yes 2/	Yes	bu./$	B/O/E	Yes 4/
Rice 1/	0018	05-CRC-BASIC	02-CRC-RICE	2005- 700B-CRC	2002-716-CRC	APH/$	Yes 2/	Yes 2/	Yes	lb/$	B/O/E	Yes 4/
Soybeans 1/	0081	05-CRC-BASIC	02-CRC-CG (9/26/01)	2005- 700B-CRC	2002-702-CRC	APH/$	Yes 2/	Yes 2/	Yes	bu./$	B/O/E	Yes 4/
Wheat	0011	05-CRC-BASIC	04-CRC WHEAT (7/10/03)	2005-700B-CRC	2004-714W-CRC	APH$	Yes 2/	Yes 2/	Yes	bu./$	B/O/E	Yes 4/
RAINFALL INDEX (RI) PILOT)												
Apiculture	1191	10-00RI-	10-RI-API	2010-920	2010-921	Final Grid Index	No	No	No	Grid Index	B by grid/type/interval/share	No
Pasture,. Rangeland, Forage -	0088	10-00RI-	10-RI-PRF	2010-920	2010-922	Final Grid Index	No	No	No	Grid Index	B by grid/type/interval/share	No

Current, up to signature date of this handbook. **Applies to additional coverage only. Unit structures are as identified unless otherwise specified in the SPOIs.

1/ Available as Additional coverage Only 2/ Refer to Part 5 for additional LP instructions and the Prevented Planting Handbook for additional PP instructions.
3/ High-risk land not insurable under IP policy; however, the high-risk land may be insured under an MPCI policy. 4/ Requires insured's signature. Refer to the CADB to determine land designated as high risk.

EXHIBIT 2
CROP POLICY INFORMATION

***2010* CY INFORMATION (or *2011* CY where designated)**		***FCIC***		***NCIS***		***Expected County Yield***	***Late Planting Prov.***	***Prev. Planting Prov.***	***Replant Payment Prov.***	***Unit of Measure***	***Unit by County (C) Basic (B) Optional (O) Enterprise (E) Whole Farm (WF)***	***High Risk Land Exclusion Option***
INSURANCE PLANS / ***Crop***	***Crop Code***	***Basic Provisions***	***Crop Provisions***	***Basic Provisions***	***Crop Provisions***							
VEGETATION INDEX (VI) (PILOT)												
Apiculture (pilot)	1191	10-00VI	10-VI-API	2010-930	2010-931	Final Grid Index	No	No	No	Grid Index	B by grid/type/interval/share	No
Pasture,. Rangeland, Forage – (Pilot)	0088	10-00VI	10-VI-PRF	2010-930	2010-932	Final Grid Index	No	No	No	Grid Index	B by grid/type/interva/sharel	No
Adjusted Gross Revenue (AGR) (Pilot)												
Agricultural Commodities	0063	2007-AGR	N/A	2007-980	N/A	Revenue $	No	No	No	$	WF	No
ADJUSTED GROSS REVENUE LITE (AGR-L)												
Agricultural Commodities	0061	07-AGR-Lite	N/A	2007-982	N/A	Revenue $	No	No	No	$	WF	No
REVENUE ASSURANCE (RA)												
Barley, Spring (Feed) 1/	0091	05-RA	04-RA-Barley	2005- 700B-RA	2004-714B-RA	APH/$	Yes 2/	Yes 2/	Yes	bu/$	B/O/E/WF	Yes 3/
Canola/rapeseed 1/	0015	05-RA	02-RA-Canola-CP	2005 700B-RA	2002- 795-RA	APH/$	Yes 2/	Yes 2/	Yes	lbs./$	B/O/E/WF	Yes 3/
Corn 1/	0041	05-RA	04-RA-Corn & Soybeans	2005- 700B-RA	2004-702-RA	APH/$	Yes 2/	Yes 2/	Yes	bu./$	B/O/E/WF	Yes 3/
Cotton 1/	0021	05-RA	03-RA-Cotton (9/24/02)	2005- 700B-RA	2003 703-RA	APH/$	Yes 2/	Yes 2/	No	lbs./¢	B/O/E/WF	Yes 3/
Rice 1/	0018	05-RA	03-RA-Rice (9/24/02)	2005- 700B-RA	2003-716-RA	APH/$	Yes 2/	Yes 2/	Yes	lbs./¢	B/O/E/WF	Yes 3/
Soybeans 1/	0081	05-RA	04-RA-Corn & Soybeans	2005- 700B-RA	2004-702RA	APH/$	Yes 2/	Yes 2/	Yes	bu./$	B/O/E/WF	Yes 3/
Sunflowers 1/	0078	05-RA	02-RA-Sunflower-CP	2005- 700B-RA	2002- 708-RA	APH/$	Yes 2/	Yes 2/	Yes	lbs./¢	B/O/E/WF	Yes 3/
Wheat	0011	05-RA	04-RA-WH Rev. 7/25/03	2005- 700B-RA	2004-714W-RA	APH/$	Yes 2/	Yes 2/	Yes	bu/$	Spring-B/O/E/WF Winter-B/O/E	Yes 3/

1/ Available as Additional coverage only. 2/ Refer to Part 5 for additional LP instructions, and the Prevented Planting Handbook for additional PP instructions.

3/ Requires insured's signature. . Refer to the CADB to determine land designated as high risk.

EXHIBIT 2
CROP POLICY INFORMATION

***2010* CY INFORMATION (or *2011* CY where designated)**		***FCIC***		***NCIS***		***UNIT OF MEASURE***	***SALES CLOSING***	***COV. LEVELS***	***CONTRACT LENGTH***	***POLICY LIMITS***
INSURANCE PLANS	***LC Code***	**** FCIC POLICY PROVISIONS s***		**** NCIS POLICY PROVISIONS***						
LIVESTOCK										
Livestock Gross Margin –Cattle	0803	LGM-Cattle 2010	N/A	2010-916	N/A	CWT/$	Monthly	80-100	11 Months	15,000 head/insurance period or 30,000 year
Livestock Gross Margin -Dairy	0847	LGM-Dairy 2010	N/A	2010-918	N/A	CWT/$	Monthly	80-100	11 Months	240,000 CWT of milk/insurance period or year
Livestock Gross Margin -Swine	0815	LGM-Swine 2010	N/A	2010-912	N/A	CWT/$	Monthly	80-100	6 Months	15,000 head/ 6 mo. or 30,000 year
Livestock Risk Protection Swine	0815	10-LRP Basic	08-LRP Swine	2010-902	N/A	CWT/$	Daily	70-100	13, 17, 21 or 26-week periods	10,000 head/SCE or 32,000 head/year
Livestock Risk Protection Fed Cattle	0802	10-LRP Basic	08-LRP Fed Cattle	2010-902	N/A	CWT/$	Daily	70-100	13, 17, 21, 26, 30, 34, 39, 43, 47, or 52 week periods	2,000 head/SCE or 4,000 head/year
Livestock Risk Protection Feeder Cattle	0801	10-LRP Basic	10-LRP Feeder Cattle	2010-902	N/A	CWT/$	Daily	70-100	13, 17, 21, 26, 30, 34, 39, 43, 47, or 52 week periods	1,000 head/SCE or 2,000 head/year
Livestock Risk Protection Lamb	0804	10-LRP Basic	10-1-LRP-LAMB	2010-902	N/A	CWT/$	Weekly	80-95	13, 20, or 39 week periods	2,000 head /SCE or 28.000 head/year

EXHIBIT 2
CROP POLICY INFORMATION

2010 CY INFORMATION (or 2011 CY where designated)		**FCIC**			**NCIS**			***Late Plant Prov***	***Prev Prov.***	***Replant Pymnt Prov.***	***Unit by: County (C) Basic (B) Optional (O) Enterprise (E) 3/ Whole Farm WF) 3/***	***4/ High-Risk Land Ex. Opt.***
Plan/Endorsement Title	***Crop or Product***	***1/ Endors. #***	***1/ Basic Provisions***	***1/ Crop Provisions***	***1/ Endors #***	***1/ Basic Provisions***	***1/ Crop Provisions***					
Actual Revenue History Pilot Endorsement	ARH Cherries Citrus	09-ARH	05-BR	2009-057 2011-0215 47	2009-NCIS 990	05-700B	2009-991 2011-992	No	No	No	B/O	Yes
MPCI Barley Winter Coverage Endorsement 2/	Barley	04-011A	05-BR	04-011	04-714 FS	05-700B	04-714	Yes	Yes	Yes 2/	B/O/E	Yes
MPCI Malting Barley Price & Quality Endorsement	Barley	96-91B	05-BR	04-011	1996-773	05-700B	04-714	Yes	Yes	Yes 2/	Separate B/O/E for Malt Bly	Yes
[IP] Barley (malting) Price & Quality Endorsement	Barley	02-391MB	05-BR	04-391	02-773 IP	05-700-B	04-714B-IP	Yes	Yes	No	E	No
RA Malting Barley Price & Quality Endorsement	Barley	03-RA-MBARLEY-QE	05-RA	04-RA-Barley	03-773-RA	05- 700B-RA	04-714B-RA	Yes	Yes	Yes	Separate B/O/E for Malt Bly	Yes
Biotechnology Endorsement (BE) - Pilot	Corn (grain)	09-BE	05-BR 05-CRC-BASIC 05-RA	98-041 02-CRC-CG 04-RA-Corn & Soybenas	2009-NCIS 702-BE	05-700B 2005-700B-CRC 05-700B-RA	1998-702 202-702-CRC 2004-702-RA	Yes	Yes	Yes	Same as the applicable Basic and Crop Provisions	Yes
Commodity Exchange Endorsement	Wheat	08-GRIP-WHEAT-CEE	05-GRIP-BASIC	06-GRIP-Wheat	08-941 GRIP-CEE	05-950-GRIP	006-941-GRIP	No	No	No	B/O	Yes
Coverage Enhancement Option	Texas Citrus Trees	09-0026A	05-GRIP-BASIC	99-025	2009-NCIS 778	2005-700B	1999-737	No	No	No	B/O	No
GRIP – Harvest Revenue Option Endorsement	Corn Soybeans	04-GRIP--HRO	05-GRIP-BASIC	06-GRIP-Corn 06-GRIP Soybeans	04-950-GRIP-HR	05- 950-GRIP	06-954-GRIP	No No	No No	No No	C	No
Farm Bill Amendment	All	09-Farm Bill	All	All	2009-NCIS 701-FB	All	All	N/A	N/A	N/A	N/A	N/A
Farm Bill Amendment	All	10-Farm Bill	All	All	2010-NCIS 701-FB	All	All	N/A	N/A	N/A	N/A	N/A
Florida Fruit Tree Pilot Crop Insurance Comprehensive Tree Value (CTV) Endorsement	Orange grapefruit *** All other citrus Avocado ***	08-0014A	05-BR	08-0014	08-748 CTV	05-700B	08-748	N/A	N/A	N/A	B/O by County	Yes
Hawaii Tropical Tree Pilot Crop Insurance Comprehensive Tree Value (CTV) Endorsement	Banana Coffee Papaya	07-0265A	05-BR	09-0265	07-894 CTV	05-700B	09-894	N/A	N/A	N/A	B/O 5/	Yes
Hybrid Seed Price Endorsement	Corn Sorghum	02-HSPE (Ed 12/01)	05-BR	98-062 98-050	02-738 PE	05-700B	98-738 98-797	Yes Yes	Yes Yes	No No	B/O B/O	Yes No
Nursery Crop Provisions Rehabilitation Endorsement	Nursery	06-073B	05-BR	08-073 (Rev. 10-06)	2006-782 R	05-700B	08-782	N/A	N/A	N/A	B by share/plant/type	Yes

1/ Current, up to signature date of this handbook. 2/ Only available in counties having fall and spring planting dates. 3/ **Enterprise units**, if provided for in the SPOI. Unit structures are as identified unless otherwise specified in the SPOI4/ Requires insured's signature. 5/ Optional unit by: noncontiguous land /type if type specified in SPOI/harvest period for bananas.

EXHIBIT 2
CROP POLICY INFORMATION

2010 CY INFORMATION (or 2011 CY where designated)		FCIC			NCIS			Late Plant Prov	Prev Prov.	Replant Pymnt Prov.	Unit by: County (C) Basic (B) Optional (O) Enterprise (E) 3/ Whole Farm WF3/)	4/ High-Risk Land Ex. Opt.
Plan/Endorsement Title	**CROP**	**1/ Endors. #**	**1/ Basic Provisions**	**1/ Crop Provisions**	**1/ Endors #**	**1/ Basic Provisions**	**1/ Crop Provisions**					
Nursery Peak Inventory End.	Nursery	08-073A	05-BR	08-073 (Rev. 10-06)	2008-782 P	05-700B	08-782	N/A	N/A	N/A	B by share/plant/type	Yes
Nursery Growers Price Endorsement (Pilot)	Nursery	06-073NUR-C	05-BR	08-073 (Rev. 10-06)	2006-782 E	05-700B	08-782	N/A	N/A	N/A	B by share/plant/type	Yes
Northern Potato Certified Seed Endorsement	N. Potatoes	08-084C	05-BR	08-0184	08-769	05-700B	08-734N	Yes	Yes	No	B/O	Yes
Northern Potato Processing Quality Endorsement	N. Potatoes	08-084B	05-BR	08-0184	08-775	05-700B	08-734N	Yes	Yes	No	B/O	Yes
Northern Potato Quality End.	N. Potatoes	08-084A	05-BR	08-0184	08-771	05-700B	08-734N	Yes	Yes	No	B/O	Yes
Northern Potato Storage Coverage Endorsement	N. Potatoes	08-084D	05-BR	08-0184	08-774	05-700B	08-734N	Yes	Yes	No	B/O	Yes
Onion Stage Removal Option (pilot)	Onions	00-013A	05-BR	00-013	00-709A	05-700B	00-709	Yes	Yes	Yes	B/O/O by Type	Yes
Quarantine Endorsement Pilot	California Citrus, California Avocado, ARH Citrus Pilot	2011-QE	05-BR	00-126 2010-0019 2011-021547	2011-763	2005-700B	2010- 807 2000-731 2011-992	N/A	N/A	N/A	N/A	N/A
Sugar Beet Stage Removal Option (Pilot)	Sugar Beets	04-39A	05-BR	98-039	04-7075 RO	05-700B	98-707	Yes	Yes	Yes	B/O	Yes
CRC – Winter Coverage End. 2/	Wheat	04-CRC-WWO Ed.5/28/03	05-CRC-BASIC	04-CRC WHEAT	04-714-WWE CRC	05-700B-CRC	04-714W-CRC	Yes	Yes	Yes	B/O/E	Yes
[MPCI] Program – Winter Coverage Endorsement 2/	Wheat	04-011A	05-BR	04-011	04-714 FS	05-700B	04-714	Yes	Yes	Yes	B/O/E	Yes
RA Program- Winter Wheat Coverage Endorsement 2/	Wheat	04-RA-WWE	05-RA	04-RA-WH	04-714 WWE RA	05- 700B-RA	04-714W-RA	Yes	Yes	Yes	B/O/E/WF	Yes
Enterprise Unit Amendment	All	10-Enterprise Unit	05-BR 05-CRC-BASIC 05-RA	All, allowed by applicable Basic Provisions or SPOIs	2010-NCIS 701-EU	All	All, allowed by applicable Basic Provisions or SPOIs	N/A	N/A	N/A	N/A	N/A
Sanctions Amendment	All	09-Sanctions	05-BR 05-CRC-BASIC 05-RA 05-GRIP-BASIC 09-102	All, allowed by applicable Basic Provisions or SPOIs	2009-NCIS 701-S	All	All, allowed by applicable Basic Provisions or SPOIs	N/A	N/A	N/A	N/A	N/A
Written Agreement Amendment	All	07-Written Agreement	All	All, allowed by applicable Basic Provisions or SPOIs		All	All, allowed by applicable Basic Provisions or SPOIs	N/A	N/A	N/A	N/A	N/A

1/ Current, up to signature date of this handbook. 2/ Only available in counties having fall and spring planting dates. 3/ **Enterprise units or Whole Farm Units**, for some plans may be offered only if provided for in the SPOI. Unit structures are as identified unless otherwise specified in the SPOI4/ Requires insured's signature. 5/ Optional unit by: noncontiguous land/type (if type specified in SPOI/harvest period for bananas.)

EXHIBIT 3

CAUSE OF LOSS NAMES AND CODES		
LOSS CAUSE	**CODE**	**APPLICABLE TO:**
NO INDEMNITY	(00)	ALL CROPS
DECLINE OF PRICE	(01)	All crops insured under, Adjusted Gross Revenue, Income Protection, Crop Revenue Coverage, Livestock Risk Protection, Livestock Gross Margin, and Revenue Assurance policies, *** pecans, and ARH plans of insurance. For income protection, CRC, and RA policies, this is applicable when the harvest price falls below the projected price (base price for CRC policies) and is the primary or secondary contributor of the loss. This is applicable, for ***pecans when a decline in the market price used to determine the indemnity is the primary or secondary contributor of the loss, or for ***ARH plans of insurance when an inadequate market price results in a revenue loss.
ASIAN SOYBEAN RUST	(09)	**ONLY:** Soybeans
DROUGHT **1/**, **2/**	(11)	ALL CROPS **EXCEPT**: Texas Citrus Fruit, Texas Citrus Trees, Florida Citrus, Cultivated Clams, Florida Fruit Trees, Livestock, Fresh Market Peppers, Raisins, Rice, Fresh Market Sweet Corn, Fresh Market. Tomatoes ($ Plan), unless this cause of loss is provided on the SPOIs.
HEAT **2/**	(12)	ALL CROPS **EXCEPT**: Florida Citrus, Texas Citrus Fruit, Texas Citrus Trees, Cultivated Clams, Florida Fruit Trees, Livestock, Fresh Market Peppers, Raisins, Fresh Market Sweet Corn, and Fresh Market Tomatoes ($ Plan).
FIS (Failure of irrigation (water) supply)	(13)	ALL CROPS **EXCEPT**: Florida Citrus, Cultivated Clams, Florida Fruit Trees, Livestock, and Raisins.
FIE (Failure of irrigation equipment)	(14)	All CROPS **EXCEPT:** Raisins
HAIL **2/**	(21)	ALL CROPS **EXCEPT**: Cultivated Clams, Florida Fruit Trees, Livestock, and Raisins.
EXCESS SUN (Sunburn)	(22)	**ONLY**: Apples
EXCESS MOISTURE/PRECIP/ RAIN **2/**	(31)	ALL CROPS **EXCEPT**: Florida Citrus, Livestock, and Cultivated Clams.
FROST **2/**, **3/** **(See footnote below.)**	(41)	ALL CROPS **EXCEPT**: Florida Citrus, Cultivated Clams, Florida Fruit Trees, Livestock, Fresh Market Peppers, Raisins, Fresh Market Sweet Corn, and Fresh Market Tomatoes ($ Plan).
FREEZE **2/**, **3/** **(See footnote below.)**	(42)	ALL CROPS **EXCEPT**: Raisins and Livestock.

Some crop provisions may contain specific cause of loss definitions; e.g., wind, frost, or freeze. Please refer to the crop provisions for any such specifics.

1/ If the insured practice is irrigated, drought cannot be listed as the cause of loss. See PAR. 40 N for more information.

2/ If the applicable crop provisions list "adverse weather" as a cause of loss, the footnoted cause is considered "adverse weather." For statistical purposes, RMA requires that "adverse weather" is broken down into the specific cause; e.g., drought. If "Other" is used, it must be explained on the claim form.

3/ SPOIs may state freeze or frost is not an insurable cause if this cause occurs after the specified date or for some crops is not an insurable cause if adequate frost/freeze protection is not in effect.

EXHIBIT 3

CAUSE OF LOSS NAMES AND CODES		
LOSS CAUSE	**CODE**	**APPLICABLE TO:**
COLD WINTER **2/**	(43)	ALL CROPS **EXCEPT**: Florida Citrus, Texas Citrus Fruit, Texas Citrus Trees, Cultivated Clams, Florida Fruit Trees, Livestock, Fresh Market Peppers, Raisins, Fresh Market Sweet Corn, and Fresh Market Tomatoes ($ Plan).
COLD WET WEATHER **2/**	(44)	ALL CROPS **EXCEPT**: Florida Citrus, Texas Citrus Fruit, Texas Citrus Trees, Cultivated Clams, Florida Fruit Trees, Livestock, Fresh Market Peppers, Raisins, Fresh Market Sweet Corn, and Fresh Market Tomatoes ($ Plan).
ICH (Insufficient Chill hrs.)	(45)	**ONLY the following**: Blueberries, Peaches, and Plums.
FLOOD **2/**	(51)	ALL CROPS **EXCEPT**: Florida Citrus, Texas Citrus Fruit, Texas Citrus Trees, Cultivated Clams, Florida Fruit Trees 4/, Livestock, Fresh Market Peppers, Raisins, Fresh Market Sweet Corn, and Fresh Market Tomatoes ($ Plan).
GRP CROPS ONLY	(55)	CROPS INSURED UNDER THE GRP PLAN OF INSURANCE.
WIND/EXCESS WIND **1/** **(See footnote below.), 2/**	(61)	ALL CROPS **EXCEPT**: Florida Citrus, Cultivated Clams, Livestock, Fresh Market Peppers, Raisins, and Fresh Market Tomatoes ($ Plan).
HOT WIND **2/**	(62)	ALL CROPS **EXCEPT**: Florida Citrus, Texas Citrus Fruit, Texas Citrus Trees, Cultivated Clams, Florida Fruit Trees, Livestock, Fresh Market Peppers, Raisins, Fresh Market Sweet Corn, and Fresh Market Tomatoes ($ Plan).
CYCLONE **2/**	(63)	ALL CROPS **EXCEPT**: Florida Citrus, Texas Citrus Fruit, Texas Citrus Trees, Cultivated Clams, Florida Fruit Trees, Livestock, Fresh Market Peppers, Raisins, Fresh Market Sweet Corn, and Fresh Market Tomatoes ($ Plan).
TORNADO **2/**	(64)	ALL CROPS **EXCEPT**: Cultivated Clams, Florida Fruit Trees, Livestock, and Raisins.
TIDAL WAVE/TSUNAMI	(65)	**ONLY**: Cultivated Clams, and Hawaii Tropical Fruit, and Hawaii Tropical Fruit Trees
OXYGEN DEPLETION	(66)	**ONLY**: CULTIVATED CLAMS.
STORM SURGE	(67)	**ONLY**: CULTIVATED CLAMS.
INSECTS **1/ (See footnote below.)**	(71)	ALL CROPS **EXCEPT**: Florida Citrus, Texas Citrus Trees, Cultivated Clams, Florida Fruit Trees 5/, Figs, Livestock, and Raisins.
PREDATION **3/ (See footnote below.)**	(73)	**ONLY**: CULTIVATED CLAMS.
ICE FLOE	(74)	**ONLY:** CULTIVATED CLAMS

Some crop provisions may contain specific cause of loss definitions; e.g., wind. Please refer to the crop provisions for any such specifics.

1/ Some policies may be limited or restricted for this cause of loss; see the individual crop provisions for specifics.

2/ If the applicable crop provisions list "adverse weather" as a cause of loss, the footnoted cause is considered "adverse weather." For statistical purposes, RMA requires that "adverse weather" is broken down into the specific cause; e.g., drought. If "Other" is used, it must be explained on the claim form.

3/ This cause of loss is excluded unless allowed by the SPOIs.

4/ Flooding is covered ONLY if allowed by the SPOI.

5/ Coverage for insects **as provided by SPOI.**

EXHIBIT 3

CAUSE OF LOSS NAMES AND CODES		
LOSS CAUSE	**CODE**	**APPLICABLE TO:**
SALINITY	(76)	**ONLY**: CULTIVATED CLAMS.
DISEASE, AQUACULTURE	(80)	**ONLY**: CULTIVATED CLAMS.
PLANT DISEASE **3/ (See footnote below.)**	(81)	ALL CROPS **EXCEPT**: Trees, Florida Citrus, Texas Citrus Trees, Cultivated Clams, Florida Fruit Trees 5/, Figs, Livestock, and Raisins (see 3/ for Hawaii Tropical fruit and Tropical Fruit Tree.)
MYCOTOXIN OR OTHER CONDITION/SUBSTANCE (e.g., mycotoxins (such as Aflatoxin or Vomitoxin) or flooded crop contaminated with substances injurious to human or animal health)	(82)	ALL CROPS **EXCEPT**: Almonds, Apples, *** Blueberries, Cabbage, Cherries, *** AZ-CA Citrus, Florida Citrus Fruit, Texas Citrus, Texas Citrus Trees, Chile Peppers, Cultivated Clams, Florida Fruit Trees, Figs, Grapes, Hawaii Tropical Trees, Livestock, Table Grapes, Macadamia Nuts, Macadamia Trees, Mint, Peaches, Pears, Pecans, Fresh Market Peppers, Plums, Processing Pumpkins, Prunes, Raisins, (California) Stonefruit, Sweet Potatoes, Fresh Market Sweet Corn, Fresh Market Tomatoes ($ and GP Plans), and Walnuts.
FIRE **4/** (See footnote below)	(91)	ALL CROPS **EXCEPT**: Cultivated Clams, Florida Fruit Trees, Livestock, and Raisins.
HURRICANE OR TROPICAL DEPRESSION **1/** (See footnote below), **2/**	(92)	ALL **CROPS EXCEPT**: Texas Citrus Fruit, Texas Citrus Trees, Florida Fruit Trees, Livestock, Peaches, Raisins, and Fresh Market Sweet Corn.
WILDLIFE **3/** (See footnote below.)	(93)	ALL CROPS **EXCEPT**: Florida Citrus, Texas Citrus Trees, Cultivated Clams, Florida Fruit Trees, Livestock, Pears, Pecans, Fresh Market Peppers, Raisins, ***, and Fresh Market Tomatoes ($ Plan).
HOUSE BURN/POLE BURN	(95)	**ONLY**: Tobacco
EARTHQUAKE	(97)	ALL CROPS **EXCEPT**: Florida Citrus, Texas Citrus Fruit, Texas Citrus Trees, Cultivated Clams, Florida Fruit Trees, Livestock, Fresh Market Peppers, Raisins, ***, and Fresh Market Tomatoes ($ Plan).
VOLCANIC ERUPTION	(98)	ALL CROPS **EXCEPT**: Florida Citrus, Texas Citrus Fruit, Texas Citrus Trees, Cultivated Clams, Florida Fruit Trees, Livestock, Fresh Market Peppers, Raisins, ***, and Fresh Market Tomatoes ($ Plan).
OTHER (Snow, Lightning, Etc.) **2/**	(99)	ALL CROPS **EXCEPT**: Florida Citrus, Texas Citrus Fruit, Texas Citrus Trees, Cultivated Clams, Florida Fruit Trees, Livestock, Fresh Market Peppers, Raisins, Fresh Market Sweet Corn, and Fresh Market Tomatoes ($ Plan).

Some crop provisions may contain specific cause of loss definitions; e.g., wind. Please refer to the crop provisions for any such specifics.

1/ The Florida Citrus Fruit Crop Provisions list "Hurricane" as an insured cause of loss, but not "Tropical Depression."

2/ If the applicable crop provisions list "adverse weather" as a cause of loss, the footnoted cause is considered "adverse weather." For statistical purposes, RMA requires that "adverse weather" is broken down into the specific cause; e.g., drought. If "Other" is used, it must be explained on the claim form.

3/ Some policies may be limited or restricted for this cause of loss; see the individual crop provisions for specifics. This cause is also applicable to Hawaii Tropical Trees when the AIP authorizes destruction of live Banana trees determined by the AIP to have BBTV or Papaya trees determined to have PRV. This cause is also applicable to loss of fruit insured under Hawaii Tropical Fruit Crop Provisions when fruit trees are infected with a disease for which the AIP authorizes destruction of the trees.

4/ Fire must be due to an act of nature.

5/ Disease as specifically provided by SPOI.

EXHIBIT 4

UNITS OF MEASURE OF PRODUCTION, BY CROP	
CROP NAME	**UNIT OF MEASURE**
Almonds	Pounds
Apiculture Pilot Rainfall Index plan Vegetative Index plan	Grid Index
Apples (Area B)	Bushels (42 lbs.)
Apples (Area C)	Bushels (40 lbs.)
Apples (Area A)	Boxes (35 lbs. lose/field box)
Avocados California Only (Pilot)	Pounds/Dollars 4/
Avocados Florida Only (Pilot)	Bushels (55 lbs.)
Barley	Bushels (48 lbs.)
Barley (Malting)	Bushels (48 lbs.)
Beans (Processing)	Tons 3/
Blueberries	Pounds
Cabbage ***	Hundredweight
Canola/Rapeseed	Pounds
ARH Citrus (Pilot)	Carton/Dollars 4/
ARH Cherry (Pilot)	Pounds/Dollars 4/
Chile Peppers, Processing (Pilot)	Pounds/Dollars 4/
Citrus (AZ-CA) (Navel, Valencia, Sweet Oranges) (Lemons) (Grapefruit) (Tangerines, Tangelos, Mandarin Oranges)	 Cartons (38 lbs.) Cartons (40 lbs.) Cartons (32 lbs.) Cartons (25 lbs.)
***	***
Citrus (FL)	Boxes (90 lbs for Types I, II, IV (Tangelo), V (Temples), VI (Lemons) and VIII) Boxes (95 lbs for Types IV (Tangerines), V (Murcott Honey Oranges) Boxes (88 lbs. for Types VI (Limes)) Boxes (85 lbs. for Types III and VII)
Citrus (TX)	Tons
Texas Citrus Trees	% Tree Damage/Dollar 1/
Cultivated Clams (Pilot)	Dollar (Individual Clam Value) 5/
Corn (Grain) 2/	Bushels (56 lbs.)
Corn (Silage)	Tons 3/
Cotton	Pounds
Cotton, ELS	Pounds
Cranberries	Barrels (100 lbs.)

1/ For Tree Crops the loss measurement is first based on the % of tree damage, and then the dollar loss is determined from this.
2/ To convert weight of ear corn to equivalent bushels of shelled corn divide by 70.
3/ Tons = 2,000 pounds
4/ Loss measurement is first based on weight/capacity measurement, as shown, and then is converted to dollars.
5/ Clam value by size

EXHIBIT 4

UNITS OF MEASURE OF PRODUCTION, BY CROP	
CROP NAME	**UNIT OF MEASURE**
Dry Beans	Pounds ***
Figs	Pounds
Flaxseed	Bushels (56 lbs.)
Florida Fruit Trees (Pilot)	% Stand/Dollar 1/
Forage Production	Tons 3/
Forage Seed (Pilot)	Pounds
Forage Seeding	% Stand/Dollar 1/
Grain Sorghum	Bushels (56 lbs.)
Grapes	Tons 3/
Table Grapes	Lugs (20-21 lbs. 2/)
Hybrid Corn Seed	Bushels (56 lbs.)/Dollar -4/
Hawaii Tropical Fruit (Pilot)	Pounds
Hawaii Tropical Fruit Trees (Pilot)	% Tree damage/Dollar 1/
Hybrid Sorghum Seed	Bushels (56 lbs.)/Dollar -4/
Livestock	Hundredweight/Dollar 3/
Macadamia Nuts	Pounds
Macadamia Trees	% Tree damage/Dollar 1/
Millet	Bushels (50 lbs.)
Mint	Pounds
Mustard	Pounds
Nursery	Dollar (Individual Plant Value)
Oats	Bushels (32 lbs.)
Onions	Hundredweight
*** Pasture, Rangeland, Forage Pilot Rainfall Index plan	Grid Index
*** Pasture, Rangeland, Forage Pilot Vegetative Index plan	Grid Index
Peaches	Bushels (50 lbs.)
Peanuts	Pounds
Pears	Tons 3/
Peas, dry	Pounds ***
Peas, green	Pounds

1/ For Forage Seeding, the loss measurement is first based on the % of stand, and then the dollar loss is determined from this. For Tree Crops, the loss measurement is first based on the % of tree damage, and then the dollar loss is determined from this.
2/ 20 lbs. in Arizona and Coachella Valley, CA district; 21 lbs. in all other CA districts.
3/ Ton = 2,000 pounds
4/ Loss measurement is first based on weight/capacity measurement, as shown, and then is converted to dollars.

EXHIBIT 4

UNIT OF MEASURE OF PRODUCTION, BY CROP	
CROP NAME	**UNIT OF MEASURE**
Pecans	Pounds/Dollars 2/
Peppers	1 1/9 bushels (per box) /Dollar -2/
Plums	Lugs (28 lbs.)
Popcorn	Pounds ***
Potatoes (Northern and Central/Southern)	Hundredweight
Prunes	Tons 1/
Pumpkins (Pilot)	Tons 1/
Raisins	Tons 1//Dollar -2/
Rangeland (GRP) (Pilot)	Tons 1/
Rice	Pounds ***
Rye	Bushels (56 lbs.)
Safflowers	Pounds ***
Sorghum Silage (Pilot)	Tons 1/
Soybeans	Bushels (60 lbs.)
Stonefruit (Apricots) (Nectarines) (Freestone Peaches) (Proc. apricots and Proc. Peaches)	 Lugs (24 lbs.) Lugs (25 lbs.) Lugs (22 lbs.) Tons 1/
Sugar Beets	Tons 1/
Sugarcane	Pounds
Sugarcane (Hawaiian)	Pounds
Sunflower Seed (Oil)	Pounds ***
Sunflower Seed (Non-oil)	Pounds ***
Sweet Corn (Processing)	Tons 1/
Sweet Corn (Fresh)	Containers (42 lbs.) /Dollar -2/
Sweet Potatoes (Pilot)	Hundredweight
Tobacco ***	Pounds
Tomatoes (Processing)	Tons 1/
Tomatoes (Fresh)	Cartons (25 lbs.) /Dollar -2/
Tomatoes (Fresh Guarantee)	Cartons (25 lbs.)
Walnuts	Pounds
(Cultivated) Wild Rice	Pounds (25 lbs. per bu. for MN & 29 lbs per bu. for CA.)
Wheat	Bushels (60 lbs.)

1/ Ton = 2,000 pounds.

2/ Loss measurement is first based on weight/capacity measurement, as shown, and then is converted to dollars.

EXHIBIT 5

ENTITIES AND DOCUMENTATION CHART

ENTITY	APPLICATION	*SIGNATURE(S) REQUIRED	DOCUMENTATION NEEDED	ID NUMBER
INDIVIDUAL	John C. Doe	John C. Doe	None	Individual EIN or SSN 1/ and 3/
INDIVIDUAL	Northam Land Company c/o James T. Anderson	Northam Land Company By James T. Anderson, Sole Owner	None	EIN or SSN of The Owner 1/
INDIVIDUAL (Female)	Anna M. Smith (Not Mrs. John C. Smith)	Anna M. Smith (Not Mrs. John C. Smith)	None	EIN or SSN of Individual 1/
INDIVIDUAL (Joint & Survivor & Interest)	John W. Doe or Mary C. Doe	(Both must sign) John W. Doe Mary C. Doe	If they are not spouses, statements signed by both parties showing authority of one to act for the other	EIN or SSN of Individual 1/
INDIVIDUAL (Minor, Natural Guardian)	John Doe, (minor) by Fred Doe, Guardian	Fred Doe, Guardian for John Doe and John Doe	Statement signed by minor and guardian showing qualifications as separate entity	EIN or SSN of Minor 1/
INDIVIDUAL (Minor Unable To Enter Into Contracts & Incompetent Court-Appointed Guardian)	Frank W. Doe c/o John H. Doe, Guardian	John H. Doe Guardian for Frank W. Doe,	Statements signed by court-appointed guardian showing where court decree can be verified	EIN or SSN of Minor or Incompetent 1/
INDIVIDUAL (Authorized Signature)	John C. Doe c/o Richard C. Roe, Authorized Representative	John C. Doe By Richard C. Roe, Under Power of Attorney	Power of Attorney	Individual EIN or SSN of insured 1/
INDIVIDUAL (Undivided Interest	John C. Doe	John C. Doe	Copy of agreement designating responsible person	Named Insured EIN or SSN 2/
INDIVIDUAL (Spousal/married Individual)	John C. Doe	John C. Doe	None	Individual EIN or SSN 1/ and 3/
ENTITY INSURING A LANDLORD'S OR TENANT'S SHARE	John C. Doe	John C. Doe	None	Individual EIN or SSN 1/, 2/ 3/ or 4
CO-OWNERS JOINT VENTURE JOINT OPERATORS	James L. Smith and John A. Brown, Co-Owners James L. Smith and John A. Brown, Joint Venture James L. Smith and John A. Brown, Joint Operators	(All must sign) James L. Smith John A. Brown	None, if all sign, or Power of Attorney authorizing signature	Joint Interest EIN or SSNs 2/
CORPORATION (with stockholders)	ABC Company, Inc. c/o Richard Roe, (Title) First National Bank of Dallas c/o John H. Doe, (Title)	ABC Company, Inc. By Richard Roe, (Title) First National Bank of Dallas By John H. Doe, (Title)	Statements where articles of incorporation/organization are on file. Indicate in which State incorporation was filed. Application must be signed by authorized person.	EIN for the Corporation 4/
Limited Liability Company (LLC)	Jones Farms, LLD C/O Sarah Jones	Jones Farms, LLC By Sarah Jones	Statement indicating which State Articles of Organization are on file. Application must be signed by authorized person.	SSN or EIN for the LLC 4/
ESTATE	Estate of Richard Roe, Deceased, c/o John H. Doe, Executor (or Administrator)	Estate of Richard Roe, Deceased, by John H. Doe Executor (or Administrator)	Statement advising where authority can be found	Estate EIN or Deceased SSN or EIN
PARTNERSHIP Written or Verbal)	Jones and Smith, A Partnership c/o Sam Jones	Jones and Smith, A Partnership By Sam Jones, A Partner	Statement signed by all partners certifying they are members of the Partnership or copy of written partnership agreement signed by all partners.	Partnership EIN 4/

1/ If EIN, individual MUST be listed as SBI and SSN provided 2/ All ENTITIES/PERSONS insured must be listed as SBI and EIN or SSN provided 3/ SSN of spouse must be listed as a SBI. 4/ SSN/EIN of any person with a SBI.

EXHIBIT 5

ENTITIES AND DOCUMENTATION CHART

ENTITY	APPLICATION	*SIGNATURE(S) REQUIRED	DOCUMENTATION NEEDED	ID NUMBER
TRUST	John H. Doe Trust, c/o Richard Roe, Trustee	John H. Doe, Trust by Richard Roe, Trustee or Administrator	Statement advising where authority can be found	EIN for Trust or SSN Reported for the Trust 3/ and 4/ if applicable
	Jones, Brown, Smith c/o Richard Roe, Trustee	Jones, Brown, Smith By Richard Roe, Trustee		EIN for Trust or SSN Reported for the Trust 3/ (if applicable) and 4/.
TRUST-BIA	(Name of Trust) BIA Trust 0016	BIA Trust 0016 by John Doe Trustee or Power of Attorney	Statement advising where authority can be found	State County BIA# Example: 01 201 0016
TRUST-IRREVOCABLE	Ralph R. Doe, Trust, c/o Richard Roe , Trustee or Administrator	Ralph R. Doe Trust, c/o Richard Roe, Trustee or Administrator	Statement advising where authority can be found	EIN for Trust or SSN Reported for the Trust 4/
TRUST-REVOCABLE	John H. Doe, Trust, c/o Richard Roe, Trustee or Administrator	John H. Doe, Trust, c/o Richard Roe, Trustee or Administrator	Statement advising where authority can be found	EIN for Trust or SSN Reported for the Trust 3/ (if applicable) and 4/. SSN of Grantor 4/.
RECEIVER OR LIQUIDATOR	XYZ Company c/o John H. Doe, Receiver (or Liquidator)	XYZ Company By John H. Doe, Receiver or Liquidator & Court-Appointed	Statement advising where authority can be found	EIN of Named Insured or Correspondent's EIN and/or SSN
PUBLIC AGENCY State-Owned Entity	State of Ohio, Board of Aeronautics, c/o John H. Doe, Director	State of Ohio, Board of Aeronautics, By John H. Doe, Director (Other Authorized Title Acceptable)	Statement advising where authority can be found.	EIN
PUBLIC AGENCY County-Owned Entity	Brown County Farms c/o Richard R. Roe Farm Manager	Brown County Farms By Richard R. Roe, Farm Manager (Other Authorized Title Acceptable)	Statement advising where authority can be found.	EIN
PUBLIC AGENCY City-Owned Entity	Fairtown Farms c/o I.M. Boss, City Mgr.	Fairtown Farms By I.M. Boss, City Mgr. (Other Authorized Title Acceptable)	Statement advising where authority can be found.	EIN
PUBLIC AGENCY (Public School-owned entity	USD # 123, C/O Superintendent Bob Jones	USD # 123 Farms by Superintendent Bob Jones (Other Authorized Title Acceptable)	Statement advising where authority can be found.	EIN
ASSOCIATION, CLUBS, PRIVATE SCHOOLS, TAX-EXEMPT ORGANIZATION	Park and Recreation Association c/o John H. Doe, Treasurer	Park and Recreation Association By John H. Doe, Treasurer	Statement advising where authority can be found	EIN for the Organization

1/ If EIN, individual MUST be listed as SBI and SSN provided

2/ All ENTITIES/PERSONS insured must be listed as SBI and EIN or SSN provided

3/ SSN of spouse must be listed as a SBI.

4/ SSN/EIN of any individual/entity with a SBI.

EXHBIT 6

HAIL/FIRE EXCLUSION APPRAISAL FACTOR CHART

The following table lists the appraisal factors for the following levels of coverage when the percent of hail/fire loss exceeds the difference between 100% and the level of coverage percent.

% Hail Damage	65%	70%	75%	80%	85%
15%	0	0	0	0	0
16%	0	0	0	0	.0118
17%	0	0	0	0	.0236
18%	0	0	0	0	.0354
19%	0	0	0	0	.0472
20%	0	0	0	0	.0590
21%	0	0	0	.0125	.0708
22%	0	0	0	.0250	.0826
23%	0	0	0	.0375	.0944
24%	0	0	0	.0500	.1062
25%	0	0	0	.0625	.1180
26%	0	0	.0133	.0750	.1298
27%	0	0	.0267	.0875	.1416
28%	0	0	.0400	.1000	.1534
29%	0	0	.0533	.1125	.1652
30%	0	0	.0667	.1250	.1770
31%	0	.0143	.0800	.1375	.1888
32%	0	.0286	.0933	.1500	.2006
33%	0	.0429	.1067	.1625	..2124
34%	0	.0571	.1200	.1750	.2242
35%	0	.0714	.1333	.1875	.2360
36%	.0154	.0857	.1467	.2000	.2478
37%	.0308	.1000	.1600	.2125	.2596
38%	.0462	.1143	.1733	.2250	.2714
39%	0615	.1286	.1867	.2375	.2832
40%	.0769	.1429	.2000	.2500	.2950
41%	.0923	.1571	.2133	.2625	.3068
42%	.1077	.1714	.2267	.2750	.3186
43%	.1231	.1857	.2400	.2875	.3304
44%	.1385	.2000	.2533	.3000	.3422
45%	.1538	.2143	.2667	.3125	.3540
46%	.1692	.2286	.2800	.3250	.3658
47%	.1846	.2429	.2933	.3375	.3776
48%	.2000	.2571	.3067	.3500	.3894
49%	.2154	.2714	.3200	.3625	.4012
50%	.2308	.2857	.3333	.3750	.4130
51%	.2462	.3000	.3467	.3875	.4248
52%	.2615	.3143	.3600	.4000	.4366
53%	.2769	.3286	.3733	.4125	.4484
54%	.2923	.3429	.3867	.4250	.4602
55%	.3077	.3571	.4000	.4375	.4720
56%	.3231	.3714	.4133	.4500	.4838
57%	.3385	.3857	.4267	.4625	.4956
58%	.3538	.4000	.4400	.4750	.5074
59%	.3692	.4143	.4533	.4875	.5192
60%	.3846	.4286	.4667	.5000	.5310
61%	.4000	.4429	.4800	.5125	.5428
62%	.4154	.4571	.4933	.5250	.5546
63%	.4308	.4714	.5067	.5375	.5664
64%	.4462	.4857	.5200	.5500	.5782

EXHBIT 6

% Hail Damage	65%	70%	75%	80%	85%
65%	.4615	.5000	.5333	.5625	.5900
66%	.4769	.5143	.5467	.5750	.6018
67%	.4923	.5286	.5600	.5875	.6136
68%	.5077	.5429	.5733	.6000	.6254
69%	.5231	.5571	.5867	.6125	.6372
70%	.5385	.5714	.6000	.6250	.6490
71%	.5538	.5857	.6133	.6375	.6608
72%	.5692	.6000	.6267	.6500	.6726
73%	.5846	.6143	.6400	.6625	.6844
74%	.6000	.6286	.6533	.6750	.6962
75%	.6154	.6429	.6667	.6875	.7080
76%	.6308	.6571	.6800	.7000	.7198
77%	.6462	.6714	.6933	.7125	.7316
78%	.6615	.6857	.7067	.7250	.7434
79%	.6769	.7000	.7200	.7375	.7552
80%	.6923	.7143	.7333	.7500	.7670
81%	.7077	.7286	.7467	.7625	.7788
82%	.7231	.7429	.7600	.7750	.7906
83%	.7385	.7571	.7733	.7875	.8024
84%	.7538	.7714	.7867	.8000	.8142
85%	.7692	.7857	.8000	.8125	.8260
86%	.7846	.8000	.8133	.8250	.8378
87%	.8000	.8143	.8267	.8375	.8496
88%	.8154	.8286	.8400	.8500	.8614
89%	.8308	.8429	.8533	.8625	.8732
90%	.8462	.8571	.8667	.8750	.8850
91%	.8615	.8714	.8800	.8875	.8968
92%	.8769	.8857	.8933	.9000	.9086
93%	.8923	.9000	.9067	.9125	.9204
94%	.9077	.9143	.9200	.9250	.9332
95%	.9231	.9286	.9333	.9375	.9440
96%	.9385	.9429	.9467	.9500	.9558
97%	.9538	.9571	.9600	.9625	.9676
98%	.9692	.9714	.9733	.9750	.9794
99%	.9846	.9857	.9867	.9875	.9912
100%	1.0000	1.0000	1.0000	1.0000	1.0000

Instructions for using the "Decimal Part of a Percent" chart below: Add the whole number to the decimal %.
Example: 58.7 hail damage @ 65 % level of coverage (.3538 + .0108) = .3646 appraisal factor
.3646 X guarantee per acre = appraisal for uninsured causes.

	65%	70%	75%	80%	85%
.1	.0015	.0014	.0013	.0013	.0012
.2	.0031	.0029	.0027	.0025	.0024
.3	.0046	.0043	.0040	.0038	.0035
.4	.0062	.0057	.0053	.0050	.0047
.5	.0077	.0071	.0067	.0063	.0059
.6	.0092	.0086	.0080	.0075	.0071
.7	.0108	.0100	.0093	.0088	.0083
.8	.0123	.0114	.0107	.0100	.0094
.9	.0138	.0129	.0120	.0113	.0106

THIS FORM IS AVAILABLE ELECTRONICALLY.

FSA-426
(01-29-02)

U.S. DEPARTMENT OF AGRICULTURE
Farm Service Agency

MPCI/FCIC INFORMATION REQUEST WORKSHEET

1. COUNTY OFFICE NAME, ADDRESS, AND TELEPHONE NO. *(Include area code)*
ANYWHERE COUNTY FSA OFFICE
PO BOX 555
CITY, STATE XXXXX-XXXX
(XXX) XXX-XXXX

2. PROGRAM YEAR: 20YY

3. DATE: 1/1/2010

ITEMS 4 THROUGH 11 TO BE COMPLETED BY REQUESTER

4A. REQUESTER'S NAME	4B. TELEPHONE NUMBER	4C. ID NUMBER	4D. ID TYPE
I.M. INSURED	(XXX) XXX-XXXX	XXX-XX-XXXX	XXX

5. PRODUCER'S NAME	6. ID NUMBER	7. ID TYPE	8. INFORMATION REQUESTED *(/) Check appropriate box(es) that are applicable to producer.)* A. FSA-578 Producer Print	B. Map Photocopies
I.M.INSURED	XXX-XX-XXXX	XXX	Y	Y

9A. INFORMATION WILL BE:
[ ] MAILED [Y] PICKED UP

9B. ADDRESS, IF MAILED

10. REMARKS

11. CERTIFICATION

I certify that the producer(s) listed above has a current policy with the insurance company I represent. This information will be used by the insurance company I represent for the express purpose of fulfilling its loss adjustment and compliance obligations.

A. REQUESTER'S SIGNATURE	B. TITLE	C. DATE
I.M. ADJUSTER	ADJUSTER	1/1/2010

12. TO BE COMPLETED BY FSA ONLY

A. DATE RECEIVED	B. DATE FURNISHED	C. WORKLOAD DATA	D. INITIALS

The U.S. Department of Agriculture (USDA) prohibits discrimination in all its program and activities on the basis of race, color, national origin, age, disability, and where applicable, sex, marital status, familial status, parental status, religion, sexual orientation, genetic information, political beliefs, reprisal, or because all or part of an individual's income is derived from any public assistance program. (Not all prohibited bases apply to all programs.) Persons with disabilities who require alternative means for communication of program information (Braille, large print, audiotape, etc.) should contact USDA's TARGET Center at (202) 720-2600 (voice and TDD). To file a complaint of Discrimination, write to USDA, Director, Office of Civil Rights, 1400 Independence Avenue, SW., Washington, DC 20250-9410, or call (800) 795-3272 (voice) or (202) 720-6382 (TDD). USDA is an equal opportunity provider and employer.

EXHIBIT 8

FSA ABBREVIATIONS ON AERIAL PHOTOS

FSA AERIAL PHOTO ABBREVIATIONS	MEANING
HEL	Highly erodible land
NHEL	Not highly erodible land
W	Wetland
NW	Nonwetland
CW	Wetland converted before 11/28/90
CWA	Wetland converted after 11/28/90 Example: "CW95" to indicate that the conversion occurred in 1995.
FW	Farmed wetland
PC	Wetland converted before 12/23/85
AW	Artificial wetland or irrigated wetland
MW	Converted wetlands determined to have a minimal effect
MG	A prior converted wetland is restored to replace a frequently cropped wetland that is converted
	A prior converted wetland is restored to replace a non-frequently cropped wetland
RW	Restored wetland that was converted before 11/28/90
	Restored wetland that was converted after 11/28/90
	Wetland that was restored under a good faith agreement
CWTE	Wetlands determined by NRCS to be exempt because of technical error
CWNA	Wetlands converted for non-agricultural uses
FW	Wetland granted a commenced conversion or third party exemption that allows a maintenance of the current system
PC	Wetland granted a commenced conversion or third party exemption that does not restrict any drainage activities on the land
NC	Noncropland pasture and acreage reclassified as noncropland.
CRP	Land that is being devoted on a nonagricultural use (Land is under Conservation Reserve Program contract).
BCSYR	Fields approved for early release from the Conservation Reserve Program. The AYR is the year the CRP contract is scheduled to expire. CRP will have been lined through. When the originally expired date is reached the CRPBSCYR will be lined through and "Expired" will be shown beside it. Example "Expired."
FSN	Farm Serial Number. It is place in the upper-left corner of the farm on the photo.
T	T followed by numbers is the assigned "Tract number;" e.g., "T1520."
1...	An assigned number to identify the field, i.e., "1" or "2." When a field is subdivided a number followed by a letter suffix, such as "1A" is shown.

EXHIBIT 9

FSA CODES USED ON FSA-578

(The terms/definitions used in this table are FSA program definitions for their programs and may not be the same terms/definitions used for FCIC program crop regulations.

CROP STATUS CODES					
First Character		**Second Character**		**Third Character**	
I	Initial (1st crop)	**I**	Intended	**M**	FSA uses crop status code "M" in the third character field when either of the following apply: (1) a field has multiple different crops planted at the same time, and a planting pattern cannot be determined (2) a field has the same crop growing in different stages at the same time, and a planting pattern cannot be determined.
B	Program crop behind a contract commodity or minor oilseed.	**F**	Crop meets the definition of failed	**"1"/ "9"**	FSA uses crop status codes "1" through "9" when more than 1 repeat crop is reported. The "1" through "9" in the third character field can also be used to identify up to 11 different planting periods.
D	Covered commodity followed by a different covered commodity - meets double-cropping definition.	**P**	crop meets the definition of prevented planted		
E	Covered commodity followed by FAV or wild rice or vice versa - meets double-cropping definition.	**A**	Abandoned (Only for Peanuts)		
F	FAV followed by a different FAV - meets double-cropping definition.	**" "**	Means planted		
G	Noncovered commodity/non-FAV followed by covered commodity or vice versa - meets double-cropping definition.	G	Noncovered commodity/non-FAV followed by covered commodity or vice versa - meets double-cropping definition.		
H	Noncovered commodity/non-FAV followed by FAV or vice versa – meets double-cropping definition.				
O	Noncovered commodity/non-FAV followed by a noncovered commodity/non-FAV meets double-cropping definition.				

EXHIBIT 9

FSA CODES USED ON FSA-578 (Continued)

CROP STATUS CODES (continued)					
First Character		**Second Character**		**Third Character**	
J	Covered commodity followed by a different covered commodity – does not meet double-cropping definition.				
K	Covered commodity followed by FAV or wild rice or vice versa – does not meet double-cropping definition.				
L	FAV followed by a different FAV – does not meet double-cropping definition.				
M	Non-covered commodity/non-FAV followed by covered commodity or vice versa – does not meet double-cropping definition				
N	Non-covered commodity/non-FAV followed by FAV or vice versa – does not meet double-cropping definition.				
P	Non-covered commodity/non-FAV followed by a non-covered commodity/non-FAV does not meet double-cropping definition.				
R	Crop is a repeat of the same initial crop planted.				
X	Crop is considered experimental.				

Examples: II-Initial Intended DF- Double crop failed I- Initial Planted

EXHIBIT 9

FSA CODES USED ON FSA-578 (Continued)

INTENDED USE CODES				
Abbreviations	Explanation		Abbreviations	Explanation
BR	Brooders		**JU**	Juice
CN	Canning		**LV**	Leaves
DE	Dry edible		**ML**	Molasses
DS	Destroyed without benefit		**OL**	Oil
EG	Eggs		**PP**	Processing for pellets
FD	Fodder		**PR**	Processed
FF	Foodfish		**RS**	Rootstock
FG	Forage		**RT**	Root(s)
FH	Fresh		**SD**	Seed
FN	Fingerlings		**SE**	Sets
FZ	Freezing		**SG**	Silage
GC	Greenchop		**SK**	Stockers
GR	Grain		**SO**	Sod
GZ	Grazing		**ST**	Storage
GM	Green Manure			
GN	Greens		**GP**	Green peanuts
HY	Hay		**HP**	Hogged peanuts
HG	Haylage		**NP**	Nut peanuts

FSA LAND USE FLAG				
Abbreviation	**Explanation**		**Abbreviation**	**Explanation**
F	Fruit or Vegetables		**N**	No Credit
O	Other cropland (not counted for program purposes)			

PLANTING PRACTICE CODES USED ON FSA-578
The planting practices on the FSA-578 are FCIC planting codes. Refer to the FCI-35 for the code and code explanation.

EXHIBIT 10

CLAIM CHECKLIST FORM STANDARDS

A General Information for AIP

(1) It is recommended that AIPs provide this or a similar checklist to adjusters for them to complete during each loss inspection. (The AIP may choose to develop a similar checklist that has been modified to fit their region and the crops insured.)

(2) The checklist is to be used as a tool to assist the adjuster in determining that important verifications have been made. It may be utilized for other purposes, such as review of adjusters' work, etc.

(3) If the AIP chooses to use this checklist, be aware that this checklist was designed to be used nationwide. There may be some items that are not applicable to a particular geographical area or crop. On the other hand, there may be items that are not included on this list because they are specific to ONLY certain geographical areas or crops. Therefore, at the bottom of this checklist, space has been provided to add additional items that may be needed but have not been included.

B Adjuster completion instructions

(1) Enter the insured's name, claim number, contract number, crop(s) and units inspected during the farm visit, and purpose of farm visit; e.g., acreage report review inspection, preliminary inspection, growing season inspection, final inspection, etc.

(2) With a check mark, indicate "Yes" or "No" for each item on the checklist. If the item cannot be answered with a "Yes" or "No," explain on the line provided by each item or on the back of the checklist if more space is needed. Be sure to appropriately identify any comments made on the reverse side.

(3) Signature is optional unless otherwise locally instructed; however, it is recommended that adjusters sign the form to facilitate any necessary follow-up action.

(4) An indication that a particular item has been verified, such as "Special Option endorsements verified" is intended to be an indication that you not only verified that the insured had the option, endorsement, etc., but that you also verified the insured's eligibility for such option, etc., and that all applicable provisions have been met and applied properly in the adjustment of the loss.

Distribution

Place the completed checklist in the insured's contract folder. No other copies are required to be distributed unless otherwise instructed by the AIP.

EXHIBIT 10

CLAIM CHECKLIST FORM STANDARDS

_____ _____ _____
Insured's name Claim number Policy number

_____
Crop(s)-Unit(s)

YES	NO		
☐	☐	1	Insured Present_____
☐	☐	2	Insurable Entity verified_____
☐	☐	3	Timely Notice_____
☐	☐	4	Share Verified_____
☐	☐	5	Companion Contract Verified (if applicable)_____
☐	☐	6	Legal Description Verified_____
☐	☐	7	Practice(s) Insurability Verified_____
☐	☐	8	Insurable Type/Variety Verified_____
☐	☐	9	Planting Dates Verified_____
☐	☐	10	Unit/Unit Division Verified _____
☐	☐	11	Risk Area Verified_____
☐	☐	12	Insurable Cause Of Loss_____
☐	☐	13	Similar Damage_____
☐	☐	14	Reasonable APH_____
☐	☐	15	Insurable Acreage_____
☐	☐	16	Sharing Interests_____
☐	☐	17	Options/Endorsements_____
☐	☐	18	Review Previous Reports_____
☐	☐	19	Previous Appraisals_____
☐	☐	20	Quality Adjustment Eligibility Verified_____
☐	☐	21	Acreage Determined/Method_____
☐	☐	22	Acreage Replanted_____
☐	☐	23	Replanting Payment_____
☐	☐	24	Certification Form_____
☐	☐	25	Sold Production Verified_____
☐	☐	26	Farm-stored Production Verified_____
☐	☐	27	Commingled Production_____
☐	☐	28	Fed Production Verified_____
☐	☐	29	Other Names/Entities for Production Verified_____
☐	☐	30	All Production Accounted For_____
☐	☐	31	Unusual/Controversial Circumstances_____
☐	☐	32	Reviewed Completed Claim with Insured or Insured=s Representative_____
☐	☐	33	Obtained Signatures_____
☐	☐	34	Second Crop Acreage_____
☐	☐	35	Signatures_____
☐	☐	36	Other_____
☐	☐	37	Other_____

This form example does not illustrate signature and date entries. Refer to instructions in paragraph B above.

EXHIBIT 11

CERTIFICATION FROM STANDARDS AND COMPLETION INSTRUCTIONS

1 General Information

Refer to paragraph 66 for detailed information pertaining to uses of this form.

2 General Completion Instructions

The items listed in these instructions correspond to the item numbers listed in paragraph 3 C below.

A The adjuster will complete the following entries:

Items 1 thru 12 and items 17 (intended use), 21, 22 and 23.

B The insured will complete the following entries:

Items 13, 14, 15, 16, 17 (actual use), 18, 19 and 20.

3 Form Standards and Completion instructions for the Certification Form

All of the following form standards and completion instructions are **"Substantive."**

A Title of the form "Certification Form"

B Required Statements and Other General Form Requirements

(1) The Privacy Act and Non-Discrimination statements are required statements that must be printed on the form or provided as a separate document. These statements are not shown in the example form in this Exhibit. The current Non-Discrimination Statement and Privacy Act Statement can be found on the RMA website at http://www.rma.usda.gov/regs/required.html or successor website. For additional signature and distribution requirements for these statements, refer to section 10 G of the DSSH. Also, refer to the DSSH for other requirements general to all forms; e.g., point size of font, submission requirements for forms approval, etc.

(2) In an appropriate area on the front of the form include the following statement, which are instructions to the insured:

"Complete and mail this form within five (5) days (or within the timeframe specified by your approved insurance provider) after: (1) All acreage in the unit has been put to another use, (2) completion of replanting on the unit for replanting payment 1/, (3) For nursery, all ZMV plants on the unit have been destroyed, or (4) any action to which you have certified as stated on this form."

C Required Item Titles and Completion Instructions for These Items.

The following items numbers and statements correspond to the example Certification Form that has been completed to illustrate how to complete all entries, except the last five items are not shown on the illustrated form.

CERTIFICATION FORM STANDARDS AND COMPLETION INSTRUCTIONS (Continued)

C Required Item Titles and Completion Instructions for These Items (Continued)

ITEM #	ITEM TITLE	COMPLETION INSTRUCTIONS
1	Policy NO.	Adjuster enters the policy number exactly as shown on the most recent policy confirmation.
2	Insured	Adjuster enters the name of insured PRINTED exactly as shown on the most recent policy confirmation.
3	Date Originated	Adjuster enters date originated (inspection date).
4	Crop	Adjuster enters name of crop.
5	Farm Serial Number	Adjuster enters Farm Serial Number from the acreage report after verification.
6	Mail To:	Adjuster enters Name of the individual (or office) and address of where the completed Certification Form will be mailed if not pre-printed on the form.
7	Unit NO.	Adjuster enters unit number from acreage report after verification.
8	Unit Acres (Practice/ Type)	Adjuster enters total acres, to tenths, of crop on the unit. Account for all crop acreage on the unit. For nursery enter the plant name.
9	Crop Year	Adjuster enters Crop Year.
Adjuster enters the following Statement above items 10-14: Replant, destruction, or Other Use of Acreage (plants for nursery) Identified above was completed on the date(s) shown.		
10	Field ID (Plant Location for Nursery)	Adjuster enters identification symbol for each field (corresponds to the entry for this item on the claim form. For nursery, the adjuster enters the location of the plants. Leave items 10 thru 17 blank when completed for special delayed claims (see PAR. 69).
11	Intended Use	Adjuster enters intended use of the acreage in the field. For nursery, the plant name. Make separate line entries for different intended uses of fields or subfields ("plow-under," “cut for hay," "destroy Aflatoxin-infected corn,” "destroy zero-value production,” etc).
12	Acres (For Nursery - Plants)	Adjuster enters acres, to tenths, of the intended use (The acreage of all fields and subfields must equal the total acres in the unit as shown in item 8.); or when harvested production is to be destroyed, instead of acres, cross out “Acres” and write in the unit of measure of the crop (e.g., “bushels”), and enter the number of bushels (or other applicable unit of measure for the crop) to be destroyed. For Nursery: the adjuster enters the number of plants ZMV plants intended to be destroyed.
13	Actual Use	Insured enters the actual use of the acreage in the field (when completed). Make separate line entries for different actual uses. For Nursery: insured enters, destroyed ZMV plants.

CERTIFICATION FORM STANDARDS AND COMPLETION INSTRUCTIONS (Continued)

C Required Item Titles and Completion Instructions for These Items (Continued)

ITEM #	ITEM TITLE	COMPLETION INSTRUCTIONS
14	Acres (Number of plants for Nursery)	Insured enters acres, to tenths, of actual use (The acreage of all fields and subfields must equal the total acres in the unit as shown in item 8.) or when harvested production is to be destroyed, instead of acres, cross out "Acres" and write in the unit of measure of the crop (e.g., "bushels"). The insured enters the actual number of bushels (or other applicable unit of measure for the crop) actually destroyed. For Nursery – Insured enters the number of plants destroyed.
15	Date	Insured enters the date that any acreage was replanted, crop with no market value (such as Aflatoxin-infected corn) was destroyed, for nursery the date the ZMV plants were destroyed, OR that each field in the ENTIRE unit was put to another use.
16	Replant Cost Per Acre	For replant payments only: Insured enters his/her actual cost per acre for replanting.
17	Totals	Adjuster enters total acreage of intended use, and insured enters actual use, respectively.
18	Remarks	Insured notates: (1) Any remarks necessary to explain any entries on the form; and (2) When destruction of acreage or harvested production is required, the methods used to destroy the production and any other information pertinent to the destruction of the production.
Required Footnote on the form: At the bottom of the Remarks block or other appropriate area of the form, the following must be pre-printed on the form: 1/ Refer to the crop policy qualifications for replanting payments.		
Required statement pre-printed directly above insured's signature block: The certification statement required by the current FCIC-24040, DSSH immediately followed by: "Additionally, I understand that the information on this form may be used for processing the claim which I previously signed."		
19	Insured's Signature	Insured: Signature of the insured (or insured's authorized representative), if applicable, after the actual use and after the Certification Form has been completed. If the landlord and tenant are both insured, the operator's (tenant's) certification can be used for both the landlord and operator.
20	Date	Insured: Date of signature by the insured (or insured's authorized representative).

CERTIFICATION FORM STANDARDS AND COMPLETION INSTRUCTIONS (Continued)

C Required Item Titles and Completion Instructions for These Items (Continued)

ITEM #	ITEM TITLE	COMPLETION INSTRUCTIONS
21	☐: Accepted ☐: Rejected	Adjuster: Acceptance or rejection as signified by a check mark in the corresponding box. If the Certification Form is rejected, refer to PAR. 64. A second field inspection is required for: (1) Destruction Verification when production is to be Destroyed due to Zero Market Value/Zero Production to Count. (2) Special delayed claims to verify information reported.
22	Code NO. and AIP Representative's Signature	Adjuster: Enter adjuster's code number and signature by the adjuster or AIP Claim supervisor who accepted (or rejected) the completed form.
23	Date	Adjuster: Date of signature by the adjuster or field representative.

D DISTRIBUTION: Unless otherwise instructed by the AIP distribute copies as follows:

- Original and one copy to the insured.
- One copy to the contract folder.

CERITIFICATION FORM STANDARDS AND COMPLETION INSTRUCTIONS (Continued)

For Illustration Purposes Only

CERTIFICATION FORM

Complete and mail this form within five (5) days (or within the timeframe specified by your insurance provider) after: (1) All acreage in the unit has been put to another use, (2) completion of replanting on the unit for replanting payment 1/, or any action to which you have certified as stated on this form.

1. **Policy NO.**	2. **INSURED**	3. **DATE ORIGINATED**
XX-XX-XXXXX	*I.M. INSURED*	*06/15/YYYY*
4. **CROP**	5. **FARM SERIAL NO.**	6. **MAIL TO:**
Soybeans	*1264*	*AIP*
7. **UNIT NO.** *00100* / 8. **UNIT ACRES** *85* *0*	9. **YEAR** ***20YY***	*ANY STREET ADDRESS*
Replant/Other Use of acreage Identified above was completed on the dates(s) shown:		*ANY TOWN, STATE XXXXX*

10. **FIELD ID**	11. **INTENDED USE**	12. **ACRES**		13. **ACTUAL USE**	14. **ACRES**		15. **DATE**	16. **REPLANT COST PER ACRE**
A	*To Replant*	20	0	*Replanted*	20	0	*6/30/YYYY*	*18.00*
A	*Not Replanted*	20	0	*Not Replanted*	20	0		
B	*Not Replanted*	45	0	*Not Replanted*	45	0		
17. TOTALS		85	0		85	0		

18. REMARKS

1/ Refer to the crop policy qualifications for replanting payments.

This form example does not illustrate all required statements and entry items (e.g., signatures, etc. Refer to subparagraph 3 above for all required statements and entries.

EXHIBIT 12

SELF-CERTIFICATION REPLANT WORKSHEET FORM STANANDARDS AND COMPLETION INSTRUCTIONS

1 **General Information**

Refer to PAR. 64 for authorized crops and other information pertaining to self-certified replant claims.

2 **Form Standards and Completion Instructions**

All of the following form standards and completion instructions are **"Substantive" (required).**

A Title of the form "Self-Certification Replant Worksheet"

B Required Statements and Other General Form Requirements

The Privacy Act and Non-Discrimination statements are required statements that must be printed on the form or provided as a separate document. These statements are not shown in the example form in this Exhibit. The current Non-Discrimination Statement and Privacy Act Statement can be found on the RMA website at http://www.rma.usda.gov/regs/required.html or successor website. For additional signature and distribution requirements for these statements, refer to section 10 G of the DSSH. Also, refer to the DSSH for other requirements general to all forms; e.g., point size of font, submission requirements for forms approval, etc.

B The following items numbers and statements correspond to the example Self-Certification Replant Worksheet that has been completed to illustrate how to complete all entries, except the last 10 items are not shown on the illustrated form.

ITEM #	ITEM TITLE	COMPLETION INSTRUCTIONS
1	Company	AIP's name. (This can be a fill-in-entry or can be pre-printed on the form.)
2	Insured's name	Insured's name as shown on the most recent Policy Confirmation.
3	Policy NO.	Policy number from the most recent Policy Confirmation
4	Crop/Crop year	Crop/Crop year for this replant.
5	Claim Number	Claim number assigned by the company.
6	Share	Insured's share to THREE decimal places. (If shares vary on same UNIT, all shares must be listed and the acreage associated with each share must be identified.)
7	Unit NO.	Unit number from the acreage report.
8	FSA FSN	FSA Farm Serial Number for the replanted acreage.
9	Unit Acres	Total number of insurable acres in the unit.
10	Replanted Acres	Total number of replanted acres.
11	Legal Description	Legal description(s) where acreage is replanted.
12	Cause of damage	Insured cause of damage.

SELF-CERTIFICATION REPLANT WORKSHEET FORM STANDARDS AND COMPLETION INSTRUCTIONS (Continued)

2 **Form Standards and Completion Instructions (Continued)**

ITEM #	ITEM TITLE	COMPLETION INSTRUCTIONS
13	Date of Damage	Month plus the year, during which MOST of the insured damage occurred. Include the specific DATE where applicable.
14	Original Plant Date	Date acreage was originally planted.
15	Replant Date	Date acreage was replanted.
16	Field Diagram	Sketch of the field and replanted acreage (shaded as instructed on the worksheet.
17	Indicate the Practice/ Type Utilized (√)	Initial type/practice and the type/practice used for the replanted acreage (indicate by placing a check mark by the applicable practice.) Write in practice or type if not listed. Write in tillage method used for the original planting and tillage method used for the replanted acreage.
18	“My yield potential for acres to be replanted is_____ per acre.	Insured’s estimate of yield potential per acre on acres to be replanted.
19	“Is damage on your farm similar to other farms in the area?" YES ___ "NO" __”	Mark “YES” or “NO” as indicated.
20	The following represent my actual replant costs as landlord____ Tenant____ owner/operator_____: This entry is not required for crops insured under the Small Grains Crops Provisions.	**MAKE NO ENTRY IF CROP IS barley, flax, oats, rye, or wheat, but attach copies of receipts for replanting expenses actually incurred for the replanted acreage.** Mark "landlord", "tenant", or "owner/operator" to indicate insured entity. Insured's TOTAL ACTUAL cost to replant the acreage. (Only the dollar amount the insured paid or is liable for.)
21	I have an agreement with the other insured party(ies) to incur the entire cost of replanting or to receive all replant payments as provided by policy provisions. YES__NO__(If yes, provide documentation.)	Indicate whether an agreement exists with any other insured party to incur the entire cost of replanting or to receive all replant payments. If question in item 21 is answered “yes” include documentation of the agreement. If such provision is not shown in the policy, replant payments are limited to the insured’s actual cost times the share no matter what agreement is in effect.

SELF-CERTIFICATION REPLANT WORKSHEET FORM STANDARDS AND COMPLETION INSTRUCTIONS (Continued)

2 **Form Standards and Completion Instructions (Continued)**

ITEM #	ITEM TITLE	COMPLETION INSTRUCTIONS
Required statement pre-printed directly above insured's signature block: The certification statement required by the current FCIC-DSSH (FCIC-24040) immediately followed by: I understand the certified information will be used to determine my replanting payment, if any, for damage to the above crop. I also understand that this Worksheet and supporting papers are subject to audit and approval by the insurance provider and that my signature herein authorizes the insurance provider to process a replanting payment in accordance with the terms of my insurance contract.		
22	Insured's Signature and Date	Insured's signature and date, certifying to information on the worksheet.
23	Adjuster's Signature, Code No., and Date	Adjuster's signature, code number, and date (after reviewing and determining worksheet is correctly completed and crop acreage is eligible for a replanting payment.)
GENERAL RANDOM REVIEW (AUDIT) INFORMATION. (a) Items 24-31 of the worksheet are to be completed when a random review (audit) is done. (b) Use a Special Report when there is not room in item 23 for documenting additional information or reasons for differences found during the review. (c) As part of the random review determine the unit acreage. If the determined acreage does not agree with what is on the worksheet, enter this fact in item 23 or on a Special Report. (d) Any information recorded on the Self-Certification Replant Worksheet or on the claim form that is found to be incorrect, line through the incorrect information, enter the correct information, and have the insured initial the change. (If you find it necessary or if instructed by the AIP, prepare a new claim form and void the original.)		
24	Reviewer Remarks	Enter information pertinent to audit. If additional room is needed, use a Special Report and write appropriately, "See attached (Title or number of form used for documentation purposes)." in item 23.
25	Reviewer Code/Date	Enter the reviewer code number and the date of review.
26	Actual/Replant Acres	Enter "O.K." if you verify the field was initially planted timely and that the number of acres actually replanted agrees with the entry in item 10. If you verify that the number of acres do not agree with item 10, enter the correct number of acres replanted.

SELF-CERTIFICATION REPLANT WORKSHEET FORM STANDARDS AND COMPLETION INSTRUCTIONS (Continued)

2 **Form Standards and Completion Instructions (Continued)**

ITEM #	ITEM TITLE	COMPLETION INSTRUCTIONS
27	Date of Damage	Enter "O.K." if you verify that the date of damage agrees with the entry in item 13. If you verify that the date of damage does not agree with the entry in item 13, determine the correct date and enter.
28	Cause of Damage	Enter "O.K." if you verify that the cause of damage is insurable and agrees with the entry in item 12. If you verify that the entry does not agree with the entry in item 12, enter the cause of damage you have determined. If the cause of damage is not insurable, identify as such.
29	Replant Practice	Enter “O.K.” if you verify that the type or practice used for replanted acreage agrees with the entry in item 17. If you verify that the practice replanted does not agree with item 17, enter the practice you have determined.
30	Did acreage appear to qualify?	Enter "Yes" or "No" to indicate whether the acreage recorded in item 10 and 26 appears to qualify for the replanting payment. If you answered no, document why the acreage did not qualify for the replant payment in item 24 or on a Special Report.
31	Actual Cost	**For CROPS INSURED UNDER THE SMALL GRAINS CROP PROVISIONS: If receipts support the crop acreage has been replanted, enter OK.** Enter "O.K." after you have verified with the insured or insured's authorized representative that the total cost incurred by the INSURED for the replanting operation (without regard to crop share and substantiated by receipts) is the same as the entry in item 20. If you verify that the total cost incurred by the INSURED in item 20 does not agree with your determination, enter the total cost you have determined and explain the difference in item 24 or on a Special Report.

3 **DISTRIBUTION:**

A <u>Preliminary Distribution</u>

(1) Transmit partially completed original and two copies to the insured to be completed by the insured.

SELF-CERTIFICATION REPLANT WORKSHEET FORM STANDARDS AND COMPLETION INSTRUCTIONS (Continued)

3 **DISTRIBUTION (Continued):**

(2) Attach the completed original and copies (with receipts showing replanting costs) to all copies of the completed claim form and transmit in accordance with instructions from your AIP.

B Final Distribution

After the Self-Certified Replant claim is approved for processing, the minimum distribution of the Self-Certified Replant Worksheet is as follows:

(1) Original attached to original claim to the office designated by the AIP to maintain insureds' file of original documents.

(2) One copy to the insured along with a legible copy of the claim.

EXHIBIT 12

SELF-CERTIFICATION REPLANT WORKSHEET FORM STANDARDS AND COMPLETION INSTRUCTIONS (Continued)

For Illustration Purposes Only

Form No. XXXX **CERTIFICATION REPLANT WORKSHEET**

GUIDELINES:
The self-certification Replant Worksheet may be used when the acreage to be replanted is 50 acres or less for a unit. Per policy provisions, in order to qualify for a replant payment, the number of acres to be replanted must be at least the lesser of 20 acres or 20% of the insured planted acreage for the unit (as determined on the final planting date or within the late planting period if a late planting period is applicable). The potential for the acres to be replanted must not exceed the amount stated in the crop policy. A replant payment may be made only once on acreage in the same location for the same crop.
The maximum replant payment for eligible crops is your actual cost not to exceed the amount indicated in your policy.

INSTRUCTIONS: Please fill out the following information completely.

1. COMPANY	2. INSURED'S NAME	3. POLICY NUMBER	4. CROP/CROP YEAR
ABC	I.M. Insured	XX-XXX-XXXXX	Corn YYYY

5. CLAIM NUMBER	6. SHARE	7. UNIT NO.	8. FSA FSN	9. UNIT ACRES	10. REPLANT ACRES
xxxxx	1.000	0 0100	1234	100.0	20.0

11. LEGAL DESCRIPTION	12. CAUSE OF DAMAGE	13. DATE OF DAMAGE	14. ORIGINAL PLANT DATE	15. REPLANT DATE
E 1/2 6 8 10 Section Township Range	Excess Precipitation	MM-YYYY	MM-DD	MM-DD

16. Draw the field where the crop is planted. Shade the area actually replanted.

FIELD DIAGRAM

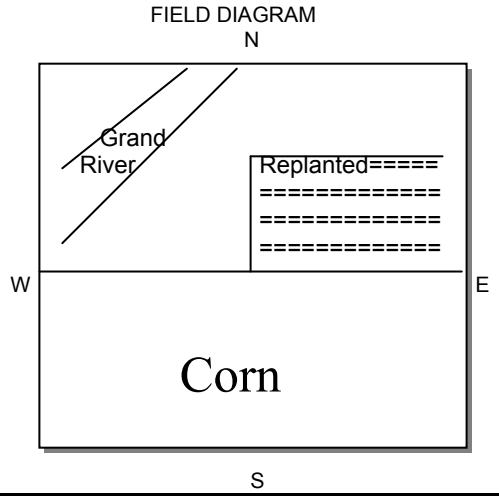

17. Indicate the practice/type utilized (✔).

	ORIGINAL	REPLANT
Drilled		
Broadcast		
Airplane-seeded		
Rowed	✔	✔
Dry bean type		
Tillage method		
Other		

18. My yield potential for the acres to be replanted is
___100.0 bu.___per acre.

19. Is damage on your farm similar to other farms in the area? YES_____NO_____(explain)

20. The following represent my ACTUAL REPLANT COSTS as

landlord____tenant_____owner/operator___

MY TOTAL ACTUAL COST FOR REPLANTED ACRES:
SEED $_XX.XX_____(Attach seed receipt)
CLEANING $_____(Bin run seed)
HERBICIDE $_XX.XX_____(Attach receipt)
__labor____ $_XX.XX_____$ XXX.XX
(other) TOTAL EXPENSE

21. I have an agreement with the other insured party(ies) to incur the entire cost of replanting or to receive all replant payments as provided by policy provisions.
YES_____ NO_X__(If yes, provide documentation)

This form example does not illustrate all required statements and entry items (e.g., signatures, etc.). Refer to subparagraph 2 above for all required statements and entries.

EXHIBIT 13

SQUARE ROOT TABLE

n	√n		n	√n		n	√n		n	√n
1	1.000		28	5.292		55	7.416		82	9.055
2	1.414		29	5.385		56	7.483		83	9.110
3	1.732		30	5.477		57	7.550		84	9.165
4	2.000		31	5.568		58	7.616		85	9.220
5	2.236		32	5.657		59	7.681		86	9.274
6	2.449		33	5.745		60	7.746		87	9.327
7	2.646		34	5.831		61	7.810		88	9.381
8	2.828		35	5.916		62	7.874		89	9.434
9	3.000		36	6.000		63	7.937		90	9.487
10	3.162		37	6.083		64	8.000		91	9.539
11	3.317		38	6.164		65	8.062		92	9.592
12	3.464		39	6.245		66	8.124		93	9.644
13	3.606		40	6.325		67	8.185		94	9.695
14	3.742		41	6.403		68	8.246		95	9.747
15	3.873		42	6.481		69	8.307		96	9.798
16	4.000		43	6.557		70	8.367		97	9.849
17	4.123		44	6.633		71	8.426		98	9.899
18	4.243		45	6.708		72	8.485		99	9.950
19	4.359		46	6.782		73	8.544		100	10.000
20	4.472		47	6.856		74	8.602			
21	4.583		48	6.928		75	8.660			
22	4.690		49	7.000		76	8.718			
23	4.796		50	7.071		77	8.775			
24	4.899		51	7.141		78	8.832			
25	5.000		52	7.211		79	8.888			
26	5.099		53	7.280		80	8.944			
27	5.196		54	7.348		81	9.000			

EXHIBIT 14

ROUND BIN CONVERSION CHART

ROUND BIN CONVERSION CHART: CONVERTING CIRCUMFERENCE TO DIAMETER: SQUARE FOOT FACTOR CHART

FACTOR FOR DETERMINING GROSS CUBIC FEET IN ROUND STRUCTURES

Circumference (feet)	Diameter (feet)	Factor (sq. ft.)		Circumference (feet)	Diameter (feet)	Factor (sq. ft.)
18.7-19.0	6.0	28.3		26.6-26.8	8.5	56.8
19.1-19.3	6.1	29.2		26.9-27.1	8.6	58.1
19.4-19.6	6.2	30.2		27.2-27.4	8.7	59.5
19.7-19.9	6.3	31.2		27.5-27.8	8.8	60.8
20.0-20.2	6.4	32.2		27.9-28.1	8.9	62.2
20.3-20.5	6.5	33.2		28.2-28.4	9.0	63.6
20.6-20.8	6.6	34.2		28.5-28.7	9.1	65.0
20.9-21.2	6.7	35.3		28.8-29.0	9.2	66.4
21.3-21.5	6.8	36.3		29.1-29.3	9.3	67.9
21.6-21.8	6.9	37.4		29.4-29.6	9.4	69.4
21.9-22.1	7.0	38.5		29.7-30.0	9.5	70.9
22.2-22.4	7.1	39.6		30.1-30.3	9.6	72.4
22.5-22.7	7.2	40.7		30.4-30.6	9.7	73.9
22.8-23.0	7.3	41.9		30.7-30.9	9.8	75.4
23.1-23.4	7.4	43.0		31.0-31.2	9.9	77.0
23.5-23.7	7.5	44.2		31.3-31.5	10.0	78.5
23.8-24.0	7.6	45.4		31.6-31.8	10.1	80.1
24.1-24.3	7.7	46.6		31.9-32.2	10.2	81.7
24.4-24.6	7.8	47.8		32.3-32.5	10.3	83.3
24.7-24-9	7.9	49.0		32.6-32.8	10.4	85.0
25.0-25.2	8.0	50.3		32.9-33.1	10.5	86.6
25.3-25.6	8.1	51.5		33.2-33-4	10.6	88.3
25.7-25.9	8.2	52.8		33.5-33-7	10.7	89.9
26.0-26.2	8.3	54.1		33.8-34.0	10.8	91.6
26.3-26.5	8.4	55.4		34.1-34.4	10.9	93.3

EXHIBIT 14

ROUND BIN CONVERSION CHART

ROUND BIN CONVERSION CHART: CONVERTING CIRCUMFERENCE TO DIAMETER: SQUARE FOOT FACTOR CHART FACTOR FOR DETERMINING GROSS CUBIC FEET IN ROUND STRUCTURES						
34.5-34.7	11.0	95.0		42.3-42.5	13.5	143.2
34.8-35.0	11.1	96.8		42.6-42.8	13.6	145.3
35.1-35.3	11.2	98.5		42.9-43.1	13.7	147.4
35.4-35.6	11.3	100.3		43.2-43.5	13.8	149.5
35.7-35.9	11.4	102.1		43.6-43.8	13.9	151.7
36.0-36.2	11.5	103.9		43.9-44.1	14.0	153.9
36.3-36.5	11.6	105.7		44.2-44.4	14.1	156.1
36.6-36.9	11.7	107.5		44.5-44.7	14.2	158.3
37.0-37.2	11.8	109.3		44.8-45.0	14.3	160.6
37.3-37.5	11.9	111.2		45.1-45.3	14.4	162.9
37.6-37.8	12.0	113.1		45.4-45.7	14.5	165.2
37.9-38.1	12.1	115.0		45.8-46.0	14.6	167.4
38.2-38.4	12.2	116.9		46.1-46.3	14.7	169.7
38.5-38.7	12.3	118.8		46.4-46.6	14.8	172.0
38.8-39.1	12.4	120.8		46.7-46.9	14.9	174.4
39.2-39.4	12.5	122.8		47.0-47.2	15.0	176.7
39.5-39.7	12.6	124.7		47.3-47.5	15.1	179.1
39.8-40.0	12.7	126.7		47.6-47.9	15.2	181.4
40.1-40.3	12.8	128.6		48.0-48.2	15.3	183.9
40.4-40.6	12.9	130.7		48.3-48.5	15.4	186.3
40.7-40.9	13.0	132.7		48.6-48.8	15.5	188.7
41.0-41.3	13.1	134.8		48.9-49.1	15.6	191.2
41.4-41.6	13.2	136.8		49.2-49.4	15.7	193.6
41.7-41.9	13.3	138.9		49.5-49.7	15.8	196.0
42.0-42.2	13.4	141.1		49.8-50.1	15.9	198.5

EXHIBIT 14

ROUND BIN CONVERSION CHART

ROUND BIN CONVERSION CHART: CONVERTING CIRCUMFERENCE TO DIAMETER: SQUARE FOOT FACTOR CHART FACTOR FOR DETERMINING GROSS CUBIC FEET IN ROUND STRUCTURES						
50.2-50.4	16.0	201.1		58.0-58.2	18.5	268.8
50.5-50.7	16.1	203.6		58.3-58.5	18.6	271.7
50.8-51.0	16.2	206.1		58.6-58.9	18.7	274.7
51.1-51.3	16.3	208.7		59.0-59.2	18.8	277.6
51.4-51.6	16.4	211.3		59.3-59.5	18.9	280.5
51.7-51.9	16.5	213.9		59.6-59.8	19.0	283.5
52.0-52.3	16.6	216.5		59.9-60.1	19.1	286.5
52.4-52.6	16.7	219.0		60.2-60.4	19.2	289.5
52.7-52.9	16.8	221.6		60.5-60.7	19.3	292.6
53.0-53.2	16.9	224.3		60.8-61.1	19.4	295.6
53.3-53.5	17.0	227.0		61.2-61.4	19.5	298.7
53.6-53.8	17.1	229.7		61.5-61.7	19.6	301.8
53.9-54.1	17.2	232.3		61.8-62.0	19.7	304.8
54.2-54.5	17.3	235.1		62.1-62.3	19.8	307.9
54.6-54.8	17.4	237.8		62.4-62.6	19.9	311.0
54.9-55.1	17.5	240.6		62.7-62.9	20.0	314.2
55.2-55.4	17.6	243.3		63.0-63.3	20.1	317.3
55.5-55.7	17.7	246.1		63.4-63.6	20.2	320.4
55.8-56.0	17.8	248.8		63.7-63.9	20.3	323.7
56.1-56.3	17.9	251.6		64.0-64.2	20.4	326.9
56.4-56.7	18.0	254.5		64.3-64.5	20.5	330.1
56.8-57.0	18.1	257.3		64.6-64.8	20.6	333.3
57.1-57.3	18.2	260.1		64.9-65.1	20.7	336.5
57.4-57.6	18.3	263.0		65.2-65.5	20.8	339.8
57.7-57.9	18.4	265.9		65.6-65.8	20.9	343.1

EXHIBIT 14

ROUND BIN CONVERSION CHART

ROUND BIN CONVERSION CHART: CONVERTING CIRCUMFERENCE TO DIAMETER: SQUARE FOOT FACTOR CHART FACTOR FOR DETERMINING GROSS CUBIC FEET IN ROUND STRUCTURES						
65.9-66.1	21.0	346.4		73.7-73.9	23.5	433.8
66.2-66.4	21.1	349.7		74.0-74.2	23.6	437.5
66.5-66.7	21.2	353.0		74.3-74.6	23.7	441.2
66.8-67.0	21.3	356.3		74.7-74.9	23.8	444.9
67.1-67.3	21.4	359.7		75.0-75.2	23.9	448.6
67.4-67.7	21.5	363.1		75.3-75.5	24.0	452.4
67.8-68.0	21.6	366.5		75.6-75.8	24.1	456.2
68.1-68.3	21.7	369.8		75.9-76.1	24.2	459.9
68.4-68.6	21.8	373.2		76.2-76.4	24.3	463.8
68.7-68.9	21.9	376.7		76.5-76.8	24.4	467.6
69.0-69.2	22.0	380.1		76.9-77.1	24.5	471.5
69.3-69.5	22.1	383.6		77.2-77.4	24.6	475.3
69.6-69.9	22.2	387.0		77.5-77.7	24.7	479.2
70.0-70.2	22.3	390.6		77.8-78.0	24.8	483.0
70.3-70.5	22.4	394.1		78.1-78.3	24.9	486.9
70.6-70.8	22.5	397.6		78.4-78.6	25.0	490.9
70.9-71.1	22.6	401.2		78.7-79.0	25.1	494.8
71.2-71.4	22.7	404.7		79.1-79.3	25.2	498.7
71.5-71.7	22.8	408.3		79.4-79.6	25.3	502.7
71.8-72.0	22.9	411.9		79.7-79.9	25.4	506.7
72.1-72.4	23.0	415.5		80.0-80.2	25.5	510.7
72.5-72.7	23.1	419.1		80.3-80.5	25.6	514.8
72.8-73.0	23.2	422.7		80.6-80.8	25.7	518.8
73.1-73.3	23.3	426.4		80.9-81.2	25.8	522.8
73.4-73.6	23.4	430.1		81.3-81.5	25.9	526.8

EXHIBIT 14

ROUND BIN CONVERSION CHART

ROUND BIN CONVERSION CHART: CONVERTING CIRCUMFERENCE TO DIAMETER: SQUARE FOOT FACTOR CHART FACTOR FOR DETERMINING GROSS CUBIC FEET IN ROUND STRUCTURES						
81.6-81.8	26.0	530.9		89.4-89.6	28.5	638.0
81.9-82.1	26.1	535.0		89.7-90.0	28.6	642.5
82.2-82.4	26.2	539.1		90.1-90.3	28.7	646.9
82.5-82.7	26.3	543.3		90.4-90.6	28.8	651.4
82.8-83.0	26.4	547.4		90.7-90.9	28.9	656.0
83.1-83.4	26.5	551.6		91.0-91.2	29.0	660.5
83.5-83.7	26.6	555.7		91.3-91.5	29.1	665.1
83.8-84.0	26.7	559.9		91.6-91.8	29.2	669.6
84.1-84.3	26.8	564.1		91.9-92.2	29.3	674.3
84.4-84.6	26.9	568.3		92.3-92.5	29.4	678.9
84.7-84.9	27.0	572.6		92.6-92.8	29.5	683.5
85.0-85.2	27.1	576.8		92.9-93.1	29.6	688.2
85.3-85.6	27.2	581.0		93.2-93.4	29.7	692.8
85.7-85.9	27.3	585.4		93.5-93.7	29.8	697.4
86.0-86.2	27.4	589.7		93.8-94.0	29.9	702.1
86.3-86.5	27.5	594.0		94.1-94.4	30.0	706.9
86.6-86.8	27.6	598.3		94.5-94.7	30.1	711.6
86.9-87.1	27.7	602.6		94.8-95.0	30.2	716.3
87.2-87.4	27.8	607.0		95.1-95.3	30.3	721.1
87.5-87.8	27.9	611.4		95.4-95.6	30.4	725.8
87.9-88.1	28.0	615.8		95.7-95.9	30.5	730.6
88.2-88.4	28.1	620.2		96.0-96.2	30.6	735.4
88.5-88.7	28.2	624.6		96.3-96.6	30.7	740.2
88.8-89.0	28.3	629.0		96.7-96.9	30.8	745.1
89.1-89.3	28.4	633.5		97.0-97.2	30.9	749.9

EXHIBIT 14

ROUND BIN CONVERSION CHART

ROUND BIN CONVERSION CHART: CONVERTING CIRCUMFERENCE TO DIAMETER: SQUARE FOOT FACTOR CHART FACTOR FOR DETERMINING GROSS CUBIC FEET IN ROUND STRUCTURES						
97.3-97.5	31.0	754.8		105.1-105.4	33.5	881.4
97.6-97.8	31.1	759.6		105.5-105.7	33.6	886.7
97.9-98.1	31.2	764.5		105.8-106.0	33.7	892.0
98.2-98.4	31.3	769.4		106.1-106.3	33.8	897.3
98.5-98.8	31.4	774.4		106.4-106.6	33.9	902.6
98.9-99.1	31.5	779.3		106.7-106.9	34.0	907.9
99.2-99.4	31.6	784.3		107.0-107.2	34.1	913.3
99.5-99.7	31.7	789.2		107.3-107.5	34.2	918.6
99.8-100.0	31.8	794.2		107.6-107.9	34.3	924.0
100.1-100.3	31.9	799.2		108.0-108.2	34.4	929.4
100.4-100.6	32.0	804.2		108.3-108.5	34.5	934.8
100.7-101.0	32.1	809.3		108.6-108.8	34.6	940.2
101.1-101.3	32.2	814.3		108.9-109.1	34.7	945.7
101.4-101.6	32.3	819.4		109.2-109.4	34.8	951.1
101.7-101.9	32.4	824.5		109.5-109.7	34.9	956.6
102.0-102.2	32.5	829.6		109.8-110.1	35.0	962.1
102.3-102.5	32.6	834.7		110.2-110.4	35.1	967.6
102.6-102.8	32.7	839.8		110.5-110.7	35.2	973.1
102.9-103.2	32.8	845.0		110.8-111.0	35.3	978.7
103.3-103.5	32.9	850.1		111.1-111.3	35.4	984.2
103.6-103.8	33.0	855.3		111.4-111.6	35.5	989.8
103.9-104.1	33.1	860.5		111.7-111.9	35.6	995.4
104.2-104.4	33.2	865.7		112.0-112.3	35.7	1001.0
104.5-104.7	33.3	870.9		112.4-112.6	35.8	1006.6
104.8-105.0	33.4	876.2		112.7-112.9	35.9	1012.2

EXHIBIT 14

ROUND BIN CONVERSION CHART

ROUND BIN CONVERSION CHART: CONVERTING CIRCUMFERENCE TO DIAMETER: SQUARE FOOT FACTOR CHART FACTOR FOR DETERMINING GROSS CUBIC FEET IN ROUND STRUCTURES						
113.0-113.2	36.0	1017.9		120.8-121.1	38.5	1164.2
113.3-113.5	36.1	1023.5		121.2-121.4	38.6	1170.2
113.6-113.8	36.2	1029.2		121.5-121.7	38.7	1176.3
113.9-114.1	36.3	1034.9		121.8-122.0	38.8	1182.4
114.2-114.5	36.4	1040.6		122.1-122.3	38.9	1188.5
114.6-114.8	36.5	1046.3		122.4-122.6	39.0	1194.6
114.9-115.1	36.6	1052.1		122.7-122.9	39.1	1200.7
115.2-115.4	36.7	1057.8		123.0-123.3	39.2	1206.9
115.5-115.7	36.8	1063.6		123.4-123.6	39.3	1213.0
115.8-116.0	36.9	1069.4		123.7-123.9	39.4	1219.2
116.1-116.3	37.0	1075.2		124.0-124.2	39.5	1225.4
116.4-116.7	37.1	1081.0		124.3-124.5	39.6	1231.6
116.8-117.0	37.2	1086.9		124.6-124.8	39.7	1237.9
117.1-117.3	37.3	1092.7		124.9-125.1	39.8	1244.1
117.4-117.6	37.4	1098.6		125.2-125.5	39.9	1250.4
117.7-117.9	37.5	1104.5		125.6-125.8	40.0	1256.6
118.0-118.2	37.6	1110.4		125.9-126.1	40.1	1262.9
118.3-118.5	37.7	1116.3		126.2-126.4	40.2	1269.2
118.6-118.9	37.8	1122.2		126.5-126.7	40.3	1275.6
119.0-119.2	37.9	1128.2		126.8-127.0	40.4	1281.9
119.3-119.5	38.0	1134.1		127.1-127.3	40.5	1288.3
119.6-119.8	38.1	1140.1		127.4-127.7	40.6	1294.6
119.9-120.1	38.2	1146.1		127.8-128.0	40.7	1301.0
120.2-120.4	38.3	1152.1		128.1-128.3	40.8	1307.4
120.5-120.7	38.4	1158.1		128.4-128.6	40.9	1313.8

EXHIBIT 14

ROUND BIN CONVERSION CHART

ROUND BIN CONVERSION CHART: CONVERTING CIRCUMFERENCE TO DIAMETER: SQUARE FOOT FACTOR CHART FACTOR FOR DETERMINING GROSS CUBIC FEET IN ROUND STRUCTURES						
128.7-128.9	41.0	1320.3		136.6-136.8	43.5	1486.2
129.0-129.2	41.1	1326.7		136.9-137.1	43.6	1493.0
129.3-129.5	41.2	1333.2		137.2-137.4	43.7	1499.9
129.6-129.9	41.3	1339.6		137.5-137.7	43.8	1506.7
130.0-130.2	41.4	1346.1		137.8-138.0	43.9	1513.6
130.3-130.5	41.5	1352.7		138.1-138.3	44.0	1520.5
130.6-130.8	41.6	1359.2		138.4-138.6	44.1	1527.5
130.9-131.1	41.7	1365.7		138.7-139.0	44.2	1534.4
131.2-131.4	41.8	1372.3		139.1-139.3	44.3	1541.3
131.5-131.7	41.9	1378.9		139.4-139.6	44.4	1548.3
131.8-132.1	42.0	1385.4		139.7-139.9	44.5	1555.3
132.2-132.4	42.1	1392.0		140.0-140.2	44.6	1562.3
132.5-132.7	42.2	1398.7		140.3-140.5	44.7	1569.3
132.8-133.0	42.3	1405.3		140.6-140.8	44.8	1576.3
133.1-133.3	42.4	1412.0		140.9-141.1	44.9	1583.4
133.4-133.6	42.5	1418.6		141.2-141.5	45.0	1590.4
133.7-133.9	42.6	1425.3		141.6-141.8	45.1	1597.5
134.0-134.3	42.7	1432.0		141.9-142.1	45.2	1604.6
134.4-134.6	42.8	1438.7		142.2-142.4	45.3	1611.7
134.7-134.9	42.9	1445.5		142.5-142.7	45.4	1618.8
135.0-135.2	43.0	1452.2		142.8-143.0	45.5	1626.0
135.3-135.5	43.1	1459.0		143.1-143.3	45.6	1633.1
135.6-135.8	43.2	1465.7		143.4-143.7	45.7	1640.3
135.9-136.1	43.3	1472.5		143.8-144.0	45.8	1647.5
136.2-136.5	43.4	1479.3		144.1-144.3	45.9	1654.7

EXHIBIT 14

ROUND BIN CONVERSION CHART

ROUND BIN CONVERSION CHART: CONVERTING CIRCUMFERENCE TO DIAMETER: SQUARE FOOT FACTOR CHART FACTOR FOR DETERMINING GROSS CUBIC FEET IN ROUND STRUCTURES						
144.4-144.6	46.0	1661.9		152.2-152.5	48.5	1847.5
144.7-144.9	46.1	1669.1		152.6-152.8	48.6	1855.1
145.0-145.2	46.2	1676.4		152.9-153.1	48.7	1862.7
145.3-145.6	46.3	1683.7		153.2-153.4	48.8	1870.4
145.7-145.9	46.4	1690.9		153.5-153.7	48.9	1878.1
146.0-146.2	46.5	1698.2		153.8-154.0	49.0	1885.7
146.3-146.5	46.6	1705.5		154.1-154.4	49.1	1893.5
146.6-146.8	46.7	1712.9		154.5-154.7	49.2	1901.2
146.9-147.1	46.8	1720.2		154.8-155.0	49.3	1908.9
147.2-147.4	46.9	1727.6		155.1-155.3	49.4	1916.7
147.5-147.8	47.0	1734.9		155.4-155.6	49.5	1924.4
147.9-148.1	47.1	1742.3		155.7-155.9	49.6	1932.2
148.2-148.4	47.2	1749.7		156.0-156.2	49.7	1940.0
148.5-148.7	47.3	1757.2		156.3-156.6	49.8	1947.8
148.8-149.0	47.4	1764.6		156.7-156.9	49.9	1955.7
149.1-149.3	47.5	1772.1		157.0-157.2	50.0	1963.5
149.4-149.6	47.6	1779.5				
149.7-150.0	47.7	1787.0				
150.1-150.3	47.8	1794.5				
150.4-150.6	47.9	1802.0				
150.7-150.9	48.0	1809.6				
151.0-151.2	48.1	1817.1				
151.3-151.5	48.2	1824.7				
151.6-151.8	48.3	1832.3				
151.9-152.1	48.4	1839.8				

EXHIBIT 15

NOTICE OF PREVENTED PLANTING OR NOTICE OF DAMAGE OR LOSS FORM STANDARDS

A General Information. The following provides the Notice of Prevented Planting or Notice of Damage or Loss Form Standards. A separate notice of prevented planting may be used rather than combining with the Notice of Damage or Loss for planted crops. However, the statements in subparagraph B and the following items listed in subparagraph D below are required: Items (1)-(10), (14)-(18), (20)-(21), and (24)-(27).

B Required Statements and Other General Form Requirements

The Privacy Act and Non-Discrimination statements are required statements that must be printed on the form or provided as a separate document. These statements are not shown in the example form in this Exhibit. The current Non-Discrimination Statement and Privacy Act Statement can be found on the RMA website at http://www.rma.usda.gov/regs/required.html or successor website. For additional signature and distribution requirements for these statements, refer to section 10 G of the DSSH. Also, refer to the DSSH for other requirements general to all forms; e.g., point size of font, submission requirements for forms approval, etc.

C Insured's E-mail Notice of Loss

The insured can provide notice via E-mail, but must have the following information in order to be considered as complying with the policy requirements for providing a written notice:

(1) Insured's Name

(2) Policy number

(3) Crops for which notice is being provided

(4) State and county in which the damaged or prevented planting acreage is located

However, if the e-mail notice is not accompanied by an electronic signature for the insured, AIPs are still responsible for verifying that the notice of loss was actually submitted by the policyholder. All other information contained in subparagraph D below must be obtained from the insured via telephone, postal service, fax, in person, etc., and the insured must be provided with a copy of the required statements outlined in subparagraph B above.

D Notice of Prevented Planting or Damage or Loss Form Standards

Following are the minimum items that are required (identified as substantive) for this form: (Also, included are suggested but not required items identified as non-substantive):

(1) Title of Form – "Notice of Prevented Planting or Damage or Loss" (Substantive)

If the AIP chooses to make these separate forms, then use the title "Notice of Prevented Planting" for the prevented planting notice, and "Notice of Damage or Loss" for planted acres.

(2) Company Name, Address, and Telephone Number (Substantive)

NOTICE OF PREVENTED PLANTING OR NOTICE OF DAMAGE OR LOSS FORM STANDARDS

(3) Insured's Name (Substantive)

(4) Insured's Address and Telephone Number (Substantive)

(5) Policy Number (Substantive)

(6) Claim Number (Non-substantive)

(7) Agency Name (Substantive)

(8) Agency Address and Phone Number (Substantive)

(9) Best Time to Contact Insured (Non-substantive)

(10) Insured's Intention- Check one □ To harvest □ To chop/silage □ Leave for cover □ Destroy □ Plant to another crop □ Pasture □ Hay □ Crop will be direct marketed □ Other (explain) □ Replant □ Unknown at this time (Substantive)

(11) If the intent is to replant and a replanting payment is applicable, is the acreage greater than 50 acres of the unit? YES____ NO____? (Non-substantive)

(12) I request authorization to commingle production from two or more units or commingle production between insured and uninsured acreage within the same structure and to use my load records, structure markings, or combine monitor records to determine production between units or production from insured/uninsured acreage. Do you agree to follow your insurance provider's written criteria and instructions to do this? YES_____ NO_____

Written or oral authorization and written criteria and instructions must be received from your insurance provider before production can be commingled. I understand that if authorization is given, my insurance provider will annually provide written criteria and instructions for the use of load or combine monitor records to separate such production, and if I fail to follow all instructions, my optional unit structure will be collapsed. (Non-substantive)

(13) I am an agent, employee, or contractor affiliated with multiple peril crop insurance (MPCI)? □ Yes □ No (Substantive)

(14) Crop (Substantive)

(15) Crop Year (Substantive)

(16) Unit No. (Substantive)

(17) Acres (Non-substantive)

(18) Legal Description (Substantive for prevented planting notices, but Non-substantive for planted acres.)

(19) Est. Prod. (Non-substantive)

NOTICE OF PREVENTED PLANTING OR NOTICE OF DAMAGE OR LOSS FORM STANDARDS

(20) Cause of Damage (Substantive)

(21) Date of Damage (Substantive)

(22) Expected Harvest Date (Non-substantive)

(23) Check one:

- ☐ This is a notice of Prevented Planting. (Substantive)
- ☐ *** This is a notice of damage only (appears that production will exceed the guarantee at this time) (Substantive)
- ☐ This is a notice of probable loss (Substantive)
- ☐ Immediate inspection is requested. If checked, explain why.

  _____

  Why immediate inspection is needed.
  (Substantive)

(24) Insured's Signature and Date (Substantive)

(25) Refer to the Basic Provisions and the specific Crop Provisions for more details on notice requirements for acreage prevented from planting and notice requirements for damage or loss requirements." (Substantive)

(26) "If you have less than 100% share, is the other share insured under an MPCI program? If so, list the person's name, name of insurance company for which they carry MPCI insurance and policy number if known." (Substantive)

(27) "Form No." - Alpha and/or numeric characters assigned by the AIP that identifies this form as a Notice of Prevented Planting, or notice of Damage or Loss form. For example: Form No. 123-NOL (02-2005). (Substantive)

EXHIBIT 16

PRODUCTION WORKSHEET CONTINUATION SHEET FORM STANDARDS

FOR ILLUSTRATION PURPOSES ONLY

PRODUCTION WORKSHEET
Continuation Sheet – Harvested Production

FORM NO. XXXX

1. Crop/Code#	2. Unit #

7. Company _____

Agency_____

8 Name of Insured_____

9 Claim #_____ 11. Crop Year_____

10 Policy # _____

SECTION II – HARVESTED PRODUCTION

MEASUREMENTS					GROSS PRODUCTION				ADJUSTMENTS TO HARVESTED PRODUCTION									
A_1 / A_2	B	C	D	E	F	G	H	I	J	K_1 / K_2	L_1 / L_2	M_1 / M_2	N	O	P	Q_1 / Q_2	R	S
Share / Field ID	Length or Diameter	Width	Depth	Deduc-Tion	Net Cubic Feet	Conver-Sion Factor	Gross Prod. (FxG)	Bu. Ton Lbs. Cwt.	Shell/ Sugar Factor	FM% / Factor	Moisture % / Factor	Test Wt. / Factor	Adjusted Production (HorI)x$JxK_2xL_2xM_2$)	Prod. Not to Count	Production (N-O)	Value / MKT. Price	Quality Factor	Production To Count (P X R)

22. . Section II Subtotal
(Add to Section II Total on Page 1)_____

Page_____of_____

EXHIBIT 16

PRODUCTION WORKSHEET CONTINUATION SHEET FORM STANDARDS

(For 2010 CY, this PW Continuation Sheet is applicable ONLY to: Canola/Rapeseed Small Grains crops, Safflowers, Sunflowers, Corn, Grain Sorghum, and Soybeans

FOR ILLUSTRATION PURPOSES ONLY

PRODUCTION WORKSHEET
Continuation Sheet – Harvested Production

FORM NO. XXXX

1. Crop/Code#	2. Unit #

7. Company _____ 8. Name of Insured _____

Agency _____ 9. Claim # _____ 11. Crop Year _____

10. Policy # _____

SECTION II – DETERMINED HARVESTED PRODUCTION

A. MEASUREMENTS						B. GROSS PRODUCTION				C. ADJUSTMENTS TO HARVESTED PRODUCTION									
47a. 47b. Share Field ID	48. Multi-Crop Code	49. Length or Diameter	50. Width	51. Depth	52. Deduc-Tion	53. Net Cubic Feet	54. Conver-Sion Factor	55. Gross Prod.	56. Bu. Ton Lbs. Cwt.	57. Shell/ Sugar Factor	58a. 58b. FM% Factor	59a. 59b. Moisture % Factor	60a. 60b. Test Wt. Factor	61. Adjusted Production	62. Prod. Not to Count	63. Production Pre-QA	64a. 64b. Value MKT. Price	65. Quality Factor	66. Production To Count

EXHIBIT 16

PRODUCTION WORKSHEET (TPC) CONTINUATION SHEET FORM STANDARDS

FOR ILLUSTRATION PURPOSES ONLY

PRODUCTION WORKSHEET (TPC)
Continuation Sheet – Harvested Production

1 Crop/Code#	Unit #

7 Company_____

Agency _____

8 Name of Insured

9 Claim #

10 Policy #

11 Crop Year

SECTION II – HARVESTED PRODUCTION

Stalk Inspection							Adjustments to Harvested Production								
A_1 A_2	B	C	D	E			F	G	H_1 H_2	I	J	K	L	M	N
Share Field ID	Row Width	Tractor	Est. Yield	Leaf Quality			Quota (Q) Non-Quota(NQ), Or Bale No.	Production	Value Per Pound Local Mkt. Price	Quality Factor ($H^1 \div H^2$)	Production Not to Count (Lbs.)	Production to Count (Lbs.)	Value of Production ($)	Value not To Count (4)	Production/ Value to Count
				G	F	P									

EXHIBIT 17

FGIS' (OR APPLICABLE STATE OR OTHER ENTITY'S) FM AND DOCKAGE DEFINITIONS

CROP	FGIS Dockage Definition (State definition, as specified) (Conspicuous Admixture or Admixture, if applicable).	FGIS FM Definition (State or other entity, as specified)
Barley	**Dockage**: All matter other than barley that can be removed from the original sample by use of an approved device according to procedures prescribed in FGIS instructions. Also, underdeveloped, shriveled, and small pieces of barley kernels removed in properly separating the material other than barley and that cannot be recovered by properly rescreening or recleaning.	**FM:** All matter other than barley, other grains and wild oats that remains in the sample after removal of dockage.
Canola/ Rapeseed	**Dockage** - All matter other than canola that can be removed from the original sample by use of an approved device according to procedures prescribed in FGIS instructions. Also, underdeveloped, shriveled, and small pieces of canola kernels that cannot be recovered by properly rescreening or recleaning. Machine separated dockage is added to conspicuous admixture in the computation of total dockage **Conspicuous admixture**: All matter other than canola including, but not limited to ergot sclerontinia, and stones, which is conspicuous and readily distinguishable from canola and which remains in the sample after the removal of machine separated dockage. Conspicuous admixture is added to machine separated dockage in the computation of total dockage.	**FM:** No definition (N/A).
Corn	**Dockage:** No definiton (N/A)	**FM:** All matter that passes readily through a 6/64 round-hole sieve and all matter other than corn that remains on top of the 12/64 round-hole sieve according to procedures prescribed in FGIS instructions.
Dry Beans	**Dockage:** N/A to grade – FGIS does not perform a dockage test unless requested.	**FM:** Stones, dirt, weed seeds, cereal grains, lentils, peas, and all matter other than beans.
Dry Peas	**Dockage** - Small, underdeveloped dry peas, pieces of dry peas, and all matter other than dry peas, which can be removed readily by the use of an approved device in accordance with procedures prescribed in the Pea and Lentil Handbook and the Equipment Handbook. For the purpose of this paragraph, "approved device" shall include sieves as set forth in paragraph (q) of this section and any other equipment that is approved by the Administrator as giving equivalent results.	**FM in dockage-free dry peas** – All matter other than dry peas and including detached seedcoats. **FM in thresher-run dry peas –** All matter other than dry peas, including detached seedcoats, which cannot be readily removed in the determination of dockage.

EXHIBIT 17

FGIS' (OR APPLICABLE STATE OR OTHER ENTITY'S) FM AND DOCKAGE DEFINITIONS

CROP	FGIS Dockage Definition (State definition, as specified) (Conspicuous Admixture or Admixture, if applicable).	FGIS FM Definition (State or other entity, as specified)
Flax	**Dockage:** All matter other than flaxseed that can be removed from the original sample by use of an approved device according to procedures prescribed in FGIS instructions. Also, underdeveloped, shriveled, and small pieces of flaxseed kernels removed in properly separating the material other than flaxseed and that cannot be recovered by properly rescreeening or recleaning. There are no definitions for stones, admixture, or conspicuous admixture.	**FM**: No definition (N/A).
Millet	**Dockage:** No definition (N/A)	**FM:** All matter other than millet seed that you can remove from the original sample by use of an approved device according to procedures prescribed in the Federal Grain Inspection Service (FGIS) instructions. Foreign material is also underdeveloped, shriveled, and small pieces of millet kernels removed in properly separating the material other than millet seed and which cannot be recovered by properly rescreening or recleaning and includes detached millet hulls.
Mustard	**Dockage (as defined by State Standards specified in the SPOIs for state/county in which the mustard is insured):** All matter removed from the sample using the required standard method of dockage determination. Dockage is reported in percent and added to and made a part of the grade designation after subclass.	**FM: (As defined by the State Standards specified in the SPOIs for the state/county in which mustard is insured):** All material other than mustard seed of the four subclasses after the removal of dockage (includes weed seeds, other grains, earth pellets or stones, sclerotia, trash, etc.). This total foreign material is composed of: a) A combination of seeds of cockle (Lychnis spp.), wild mustard (Brassica Kaber), and rapeseed (Brassica campestris and B napus); b) Other weed seeds than those subdivision a: and c) All matter other than mustard or weed seeds of subdivisions a) and b).
Oats	**Dockage:** No definition (N/A)	FM: All matter other than oats, wild oats, and other grains.
Popcorn	**Dockage:** No definition (N/A)	FM: All matter other than popcorn
Rice	**Dockage:** No definition (N/A)	FM: No definition (N/A)
Rye	**Dockage**: All matter other than rye that can be removed from the original sample by use of an approved device in accordance with procedures prescribed in FGIS instructions. Also, underdeveloped, shriveled, and small pieces of rye kernels removed in properly separating the material other than rye and that cannot be recovered by properly rescreening and recleaning.	FM: All matter other than rye that remains in the sample after the removal of dockage.

EXHIBIT 17

FGIS' (OR APPLICABLE STATE OR OTHER ENTITY'S) FM AND DOCKAGE DEFINITIONS

CROP	FGIS Dockage Definition (State definition, as specified) (Conspicuous Admixture or Admixture, if applicable).	FGIS FM Definition (State or other entity, as specified)
Safflowers	**Dockage**: All material other than whole safflower seed that can be easily removed with a cleaning device and by handpicking and also includes underdeveloped, shriveled, and small pieces of safflower seed that cannot be recovered by properly recleaning. There are no definitions for admixture, conspicuous admixture, or stones.	**FM:** No definition (N/A)
Sorghum, Grain	**Dockage:** All matter other than sorghum that can be removed from the original sample by use of an approved device according to procedures prescribed in FGIS instructions. Also, underdeveloped, shriveled, and small pieces of sorghum kernels removed in properly separating the material other than sorghum.	**FM**: All matter, except sorghum, which passes over the number 6 riddle and all matter other than sorghum that remains on the top of the 5/64 triangular-hole sieve according to procedures prescribed in FGIS instructions.
Soybeans	**Dockage**: No definition (N/A)	All matter that passes through an 8/64 round-hole sieve and all matter other than soybeans remaining in the sieved sample after sieving according to procedures prescribed in FGIS instructions.
Sunflower Seed Non-Oil (Confec-tionary)	**Dockage**: All material other than whole confectionary sunflower seeds containing kernels that you can remove by using handsieving and by handpicking a portion of the sample. **Admixture**: Consists of all material other than confectionary sunflower seed which you can remove from a test portion by handseiving and handpicking. Consider empty hulls and part of seed as confectionary sunflower seed. The major difference between admixture and dockage is that hulls and pieces of hulls are not included in admixture. Consequently, the percentage of admixture is lower than the percentage of dockage. There are no definitions for conspicuous admixture or stones.	**FM:** No definition (N/A)
Sunflower Seed – Oil	**Dockage:** No definition (N/A)	**FM:** All matter other than whole sunflower seeds containing kernels that can be removed from the original sample by use of an approved device and by handpicking a portion of the sample according to procedures prescribed in FGIS instructions.
Wheat	**Dockage:** All matter other than wheat that can be removed from the original sample by use of an approved device according to procedures prescribed in FGIS instructions. Also, underdeveloped, shriveled, and small pieces of wheat kernels removed in properly separating the material other than wheat and that cannot be recovered by properly rescreening or recleaning.	**FM:** All matter other than wheat that remains in the sample after the removal of dockage and shrunken and broken kernels.

EXHIBIT 18

CALCULATION SEQUENCE OF LIABILITY ADJUSTMENT FACTOR (LAF), MISREPORTED INFORMATION FACTOR (MIF), AND 1ST/2ND CROP REDUCTION

A General Information

(1) Refer to PAR. 21 for information on LAF, and Exhibit 1 for definition of LAF.

(2) Refer to PAR. 21 for information on MIF, and Exhibit 1 for definition of MIF.

(3) Refer to PAR. 47 for information on 1st/2nd Crop Reduction.

(4) **The liability used to determine the LAF and MIF for a replanting payment, preventing planting payment, and an indemnity payment is a separate liability for each type of payment (i.e., the liability for a replanting payment, a prevented planting payment, and an indemnity payment with the same unit number are not combined). They are kept separate in the same manner that each payment type is a separate payment.**

B. Calculation Sequence of LAF, MIF, and 1st/2nd Crop Reduction

(1) Indemnity Payment:

Step 1. Stage Guarantee Per Acre [1/] X Determined Acres X LAF = Loss Guarantee.

Step 2. Loss Guarantee minus Production to Count (dollar amount to count, if applicable) = Production or Dollar Loss.

Step 3. Production or Dollar Loss X Price Election X Stage Price Percent Factor [2/], if applicable X Insured Share X MIF, if applicable = Preliminary Indemnity.

Step 4. Preliminary Indemnity X Multi-crop Reduction Factor, if applicable = Indemnity.

[1/] If a Guarantee Reduction Factor is applicable, the Stage Guarantee Per Acre is Stage Guarantee Per Acre X Guarantee Reduction Factor; e.g., Guarantee Reduction Factor would be for late planted, prevented planting acres, and is also applicable for a particular crop such as strawberries. Refer to Appendix III (M-13 Handbook) for applicable calculation for the Stage Guarantee Per Acre for the applicable crop.

[2/] Refer to Appendix III/M-13 Handbook to determine whether a Stage Price Percent Factor applies.

(2) Replant Payment:

Step 1. Stage guarantee per acre = what the applicable crop provisions state the replant payment will be based; e.g., Lesser of: .20 of guarantee per acre or number of bushels stated in the policy.

Step 2. Stage Guarantee per acre X Determined acres replanted X LAF = Loss Guarantee.

Step 3. Loss Guarantee X Price Election X Insured Share X MIF = Replant Payment.

(3) Prevented Planting Payment

Step 1 Stage Guarantee per acre X PP% of Guarantee X =+5 or +10 option, if applicable X Determined Acres X LAF = PP Loss Guarantee.

Step 2 PP Loss Guarantee X price election X share X MIF = PP Preliminary Payment.

Step 3 PP Preliminary Payment X Multi-crop Reduction Factor = PP Payment

EXHIBIT 19

INSTRUCTIONS FOR DETERMINING TREE/VINE/BUSH ACRES

Generally, determined perennial crop acres are based on land acres. However, for certain situations perennial crop acres may be determined using tree/vine/bush plantings as stated in PAR. 80 G (3). ADJUSTERS ARE AUTHORIZED TO USE THIS PROCEDURE ONLY IF ONE OF THE SITUATIONS DESCRIBED IN PAR. 80 G (3) EXISTS. If one of the situations does not exist, land acres must be determined as stated in PAR. 80 G (1)-(2).

The symbols (☼, x, etc.) in the planting pattern diagrams herein, represent a single tree/vine/bush. Planting pattern diagrams and number of trees/vines/bushes contained herein are for illustration purposes only and are not to scale.

A. SQUARE OR RECTANGLE PLANTING PATTERNS

(1) Trees/vines/bushes planted in a square or rectangle pattern (see diagram below).

Square Planting Pattern

	1	☼	☼	☼	☼	☼	☼
Row	2	☼	☼	☼	☼	☼	☼
	3	☼	☼	☼	☼	☼	☼
	4	☼	☼	☼	☼	☼	☼

(2) Calculate the number of trees/vines/bushes per acre by multiplying the average distance between trees/vines/bushes (L) by the average distance between tree/vine/bush rows (W) and divide this product into 43,560 sq. ft./acre using the formula below.

Number of Trees per Acre Formula:
43,560 sq. ft./acre ÷ (L x W) = trees/vines/bushes per acre (T)

Example: 43,560 sq. ft./acre ÷ (20.0 ft. x 20.0 ft.) = 108.9 rounded to 109 trees/acre.

(3) Count the actual number of trees in the orchard (N) and divide this amount by the number of trees/acre (T) to calculate acreage using the formula below.

Orchard Acreage Formula:
N ÷ T = A

Example: 42 ÷ 109 = 0.385 rounded to 0.4 acres.

INSTRUCTIONS FOR DETERMINING TREE/VINE/BUSH ACRES

B.

(1) Trees/vines/bushes planted in a hedgerow or border pattern (see diagram below).

Hedgerow or Border Planting Pattern

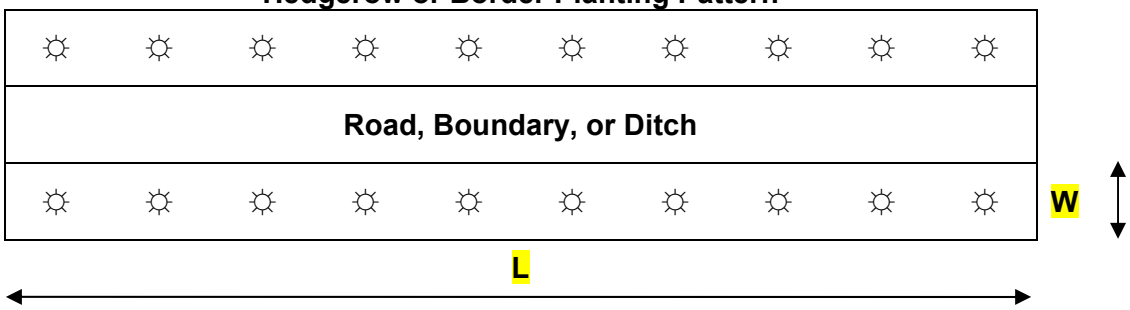

(2) If the trees/vines/bushes are planted along a road, boundary or ditch row, use (L) to designate the length of the row of trees.

(3) Use (W) to designate the average row width (i.e., average width of the distance between trees in the row not to exceed the distance from the center of the tree to the middle of the road, boundary, or ditch). Multiply (L) times (W) and divide this product into 43,560 sq. ft./acre to determine trees/vines/bushes per acre using the formula below.

Hedgerow or Border Trees/Vines/Bushes per Acre Formula:
43,560 ÷ (L x W) = trees/vines/bushes per acre (T).

Example: 43,560 ÷ (350.0 ft. x 8.5 ft.) = 14.6 trees per acre.

(4) Divide the trees per acre (T) into the number of trees counted in a single row (R). Calculate acreage occupied by this row of trees using the formula below.

Acreage Occupied by a Row of Trees/Vines/Bushes Formula:

R ÷ T = acres

Example: 10 ÷ 14.6 = 0.684 rounded to 0.7 acres. If two or more rows, multiply result by the number of rows.

C. HEXAGONAL/QUINCUNX PLANTING PATTERNS

(1) Trees/vines/bushes planted in a hexagonal/quincunx pattern (see diagram below).

Quincunx/Hexagonal Planting Patterns

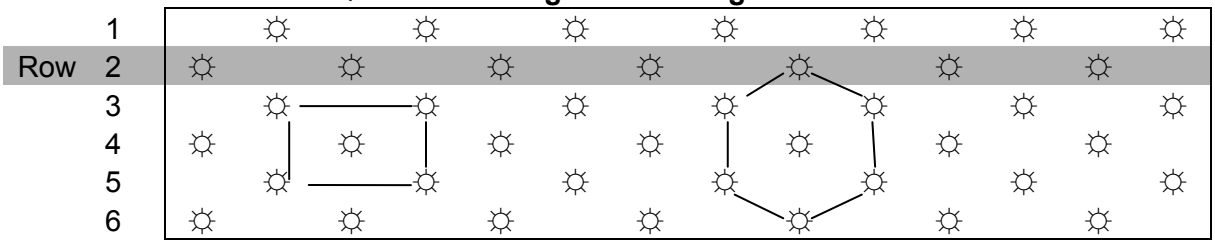

(2) A quincunx planting pattern is defined as trees/vines/bushes planted in corners of a rectangle with one tree in the middle of the rectangle (illustrated on the left above). A hexagonal planting pattern is defined as six adjoining trees/vines/bushes planted equidistant from any one plant in the orchard (illustrated on the right above).

(3) For hexagonal/quincunx planting patterns, double the number of trees per acre for a square pattern from the trees per acre chart. For example, for a 20.0 ft. x 20.0 ft planting pattern from the chart, doubled is 218 trees per acre, or calculate trees per acre by multiplying the distance between trees (L), times the distance between rows (W), (i.e., distance between highlighted trees in the above diagram) and divide this product into 87,120 using the formula below.

Formula:
87,120 ÷ (L x W) = trees/vines/bushes per acre (T)

Example: 87,120 ÷ (20.0 ft. x 20.0 ft.) = 217.8 rounded to 218 trees/acre.

(4) Count the actual number of trees in the orchard (N) and divide this amount by the number of trees/acre (T) to calculate acreage using the formula below.

Orchard Acreage Formula:
N ÷ T = A

Example: 435 ÷ 218 = 1.995 rounded to 2.0 acres.

D. DOUBLE ROW PLANTING PATTERN

(1) Tree/vines/bushes planted in a double row pattern (see diagram below).

Double Row Planting Pattern

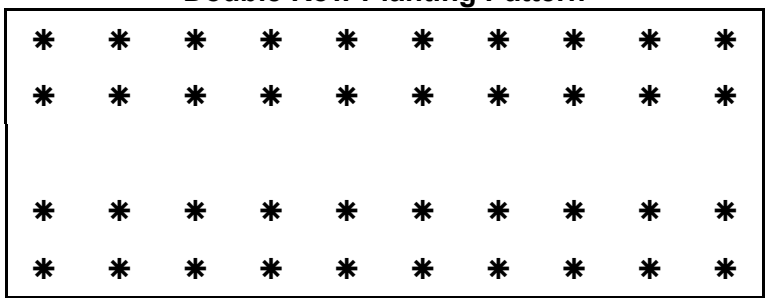

(2) Calculate the number of trees per acre by counting the actual number of trees in each row (T). Next, count the number of rows (R). Calculate the number of trees (N) in the orchard using the following formula:

Number of Trees in Orchard Formula:
T x R = N

Example: 22 x 14 = 308

(3) Measure the length (L) and width (W) of the orchard boundary in accordance with PAR 80 G. Calculate the number of square feet in the orchard using the following formula:

Square Feet per Orchard Formula
L x W = square feet/orchard

Example: 240.0 ft. x 200.0 ft. = 48,000 sq. ft.

(4) Calculate acreage (A) using the following formula:

Acreage Formula:
Square Feet per Orchard ÷ 43,560 (sq. ft. per acre) = (A)

Example: 48,000 sq. ft. ÷ 43,560 sq. ft. = 1.102 acres rounded to 1.1 acres

(5) Calculate the number of trees per acre using the following formula:

Trees per Acre Formula:
Number of trees in orchard ÷ Acreage = Trees/Acre

Example: 308 ÷ 1.1 = 280 trees/acre

E. INTERPLANTED CROP PLANTING PATTERN

(1) Two separate tree/vine/bush crops interplanted in the same orchard (see diagram below).

Orchard Dimensions: 320.0 ft. L x 80.0 ft. W

A	P	A	P	A	P	A	P	A	P	A	P	A	P	A
P	A	P	A	P	A	P	A		A	P	A	P	A	P
A	P	A		A	P	A	P	A	P	A	P	A	P	A
P	A	P	A	P	A		A	P	A	P	A	P	A	P

Actual tree counts: A = 30 Apple trees, P = 27 Pear trees, 3 missing Pear trees

(2) Calculate the orchard acreage as follows. Orchard boundary extends 10.0 ft. beyond the outside rows and 10.0 ft. beyond the ends. The dimensions of the orchard boundary are 320.0 ft. L x 80.0 ft. W; calculate acres using the following formula.

Orchard Acreage Formula:
(L x W) ÷ 43,560 sq. ft./acre

Example: 25,600.0 sq. ft. ÷ 43,560.0 sq. ft./acre = 0.588 rounded to 0.6 acres.

(3) Calculate percent of each tree crop acreage in the orchard as follows.

30 apple trees ÷ 57 total orchard trees= 0.53 or 53% apple trees

0.6 acres X 0.53 = 0.3 apple tree acres.

0.6 block acres − 0.3 apple acres = 0.3 pear tree acres.

F. MISSING AND PARTIAL TREE PLANTING PATTERN

(1) Orchard contains full trees, trees with two scaffold limbs, trees with on scaffold limb, and skips (see diagram below). Tree spacing is 20.0 ft. x 20.0 ft.

Orchard Dimensions: 320.0 ft. L x 80.0 ft. W

X	X		X			X	X		X	X		X	V	X
X	V	X		X	X	X	X	X	\	X	X	X	X	X
X		X	X	X	X		/	X	X	X	X	X		X
X	X	X			X	X	X	X	X		X	X	X	V

Actual tree counts: X = 43 full trees, V = 3 two-scaffold limb trees, \ or / = 2 one-scaffold trees, 11 skips (dead or missing trees). Original stand was 59 trees.

(2) Calculate the number of trees per acre by multiplying the average distance between trees (L) by the average distance between tree rows (W) and dividing this product into 43,560 sq. ft. per/acre.

Example: 43,560 sq. ft./acre÷ (20.0 ft. x 20.0 ft.) = 108.9 rounded to 109 trees/acre.

(3) Calculate the orchard acreage. Orchard dimensions are 320.0 ft. L by 80.0 ft W, that includes the boundary that extends 10.0 ft. beyond the outside rows and 10.0 ft. beyond the ends.

Example: 320.0 ft. L x 80.0 ft. W = 25,600.0 sq. ft. in the orchard.
25,600.0 sq. ft. ÷ 43,560.0 sq. ft./acre = 0.587 rounded to 0.6 acres.

(4) Calculate insurable acres. Count the number of full trees, two scaffold trees, and one scaffold trees. Do not count skips. There are a total of 48 trees.

Example: 48 trees ÷ (109 trees/acre X 0.6 acres) = 0.733 rounded to 0.73 percent stand.
0.6 tree acres X 0.73 percent stand = 0.438 rounded to 0.4 acres.

(5) Refer to the Special Provisions, Crop Provisions, Basic Provisions, and CIH for additional information on acreage adjustments for orchards (e.g., orchards with less than a 90% percent stand, etc.).

EXHIBIT 20

SETTLEMENT OF CLAIM WHEN INSURED HAS LESS THAN 100% SHARE

The following examples include mycotoxin damage only to add complexity to the examples. The examples are based on the requirements in PAR. 84 C.

EXAMPLE 1:– Indemnity calculation when QA is involved and QA Provisions are in the SPOIs –

The tenant's and landlord's corn indemnity payments are affected by each other's disposition choices and the dates of disposition when they differ from each other. This is because claims for a tenant and landlord operation are settled on the basis of the **TOTAL harvested and appraised production for the TOTAL INSURED ACREAGE for the UNIT (which represents the combined tenant/landlord operation).**

In this example, the landlord and tenant have equal shares of the crop (50%). All of the insured corn acreage was harvested and produced 1,000 bushels. The corn production contained 330 ppb Aflatoxin, which puts it in Section (C4 - **For Group 1 QA Statements**, C3 - **For Group 2 QA Statements**) of the SPOIs because the Aflatoxin exceeded 300 ppb. Section Section (C 4 - **For Group 1 QA Statements**, C3 - **For Group 2 QA Statements**) requires that such production is destroyed, sold, or fed or combination of all of these before the claim can be settled.

(1) If fed (or used in a manner other than feed or sold to other than a disinterested third party), the DF = 0.500. See Column (2) in table 1 below for fed production in this example.

(2) If destroyed in a manner acceptable to the AIP, DF = 1.000. See Column (3) in table 1 below for production destroyed in a manner acceptable to the AIP. If the production was not destroyed in a manner acceptable to the AIP or the insured makes no attempt (or refuses) to destroy the production, no quality adjustment would be allowed for quality deficiencies in Section C of the SPOI.

Both shareholders do not have to select the same disposition. Each could select a different disposition and that share of the production would be adjusted accordingly; e.g., the landlord sold her production, and the tenant fed part of his production and destroyed the rest of his production.

CROP **Corn** **With 330 ppb of Aflatoxin**	**Landlord Sold Production October 15, 2010 (production was transported directly from field to buyer** (1)	**Tenant FED PART of his Share of Production All fed by end of January 21, 2011** (2)	**Tenant acceptably destroys production on February 1, 2011** (3)
Loss guarantee =	1,500.0	1,500.0	1,500.0
DF =	**0.750**	**0.500**	**1.000**
QAF	**.250**	**.500**	**.000**
Sold Gross Production	**500.0**		**0.0**
Fed Gross Production		**450.0**	**0.0**
Destroyed Production			**50**
QA Adjusted PTC	**125.0**	**225.0**	**0.0**
Production to count entered on both claims	**350.0 bu**		
Total Production Loss	1150.0 bu. (1500.0 bu. (Unit Guarantee) minus 350.0 PTC = 1150.0)		
Landlord's Share = 50%	.500 share X 1150 bu. = 575.0 bu. loss		
Tenant's Share = 50%	.500 share X 1150 bu. = 575.0 bu. loss		
Since both tenant and landlord in this example have equal shares and have the same price election, the indemnities are the same for both. Neither claim can be completed and processed until at least February 1, 2011, the date of the final known disposition of all production on the unit (which represents the combined tenant/landlord operation).			

EXHIBIT 20

SETTLEMENT OF CLAIM WHEN INSURED HAS LESS THAN 100% SHARE

EXAMPLE 2:

Scenario 1 – Corn – PART A

This scenario involves **corn insured as grain** in an area of the country where the calendar date for the EOIP is **December 10th**. Assume insurability requirements are met (e.g. Farmer Brook (Tenant w/60% share) and Farmer Dunn (Landlord w/40% share) harvest and deliver their corn directly from the field to the elevator. The production is comprised of a single 1,000 bushel load from a 20 acre unit. The corn has 14 percent moisture (no adjustment required) and no foreign material but has a **test weight of 48 pounds** and **25 ppb Aflatoxin** (as per a disinterested testing facility). Both shareholders have crop insurance and 100 bu/ac guarantees but with different companies. They both filed timely notices of loss.

On December 5th (same date as harvest), Farmer Brook (tenant) sold his 60% share of the production for $3.15/bu. On date of sale, the LMP was $3.50/bu. The elevator had applied a $0.35/bu. RIV for the low test weight but no RIV for the Aflatoxin.

Farmer Dunn's (landlord) grain was delivered to the elevator on the same day it was harvested, but placed in commercial storage at the elevator. On January 3rd, Farmer Dunn sold his 40% share of the production for $3.40/bu. On date of sale, the LMP was $4.00/bu. The elevator had applied a $0.35/bu. RIV for the low test weight plus a $0.25bu. RIV for the Aflatoxin.

QUESTION 1A: On December 10th, the adjuster from the Speedy Service Insurance Company arrives to work Farmer Brook's (tenant) claim. Based solely on the above information, could the Speedy Service Insurance Company finalize Farmer Brook's claim on this date? If not, why?

ANSWER 1A: No. The claim could not be finalized until the disposition of Farmer Dunn's 40% share was known.

QUESTION 2 A: On January 29th, the adjuster from the Barely-In-Time Insurance Company arrives to work Farmer Dunn's (landlord) claim. Based solely on the above information, could the Barely-In-Time Insurance Company finalize Farmer Dunn's claim on this date and why or why not?

ANSWER 2 A: Yes, because the disposition of both shareholders is known at this time.

QUESTION 3 A: Which Section of the SPOI Quality Statements applies to Farmer Brooks and what QAF is used for his share?

ANSWER 3 A: Section C 2 of the SPOI is the applicable section since the production contained Aflatoxin and was sold (transported directly from the field to the elevator and sold prior to 60 days after the calendar date for the EOIP). The DF is determined by adding the $0.35/bu. RIV for test weight plus $0.000 RIV for Aflatoxin (no RIV applied) divided by $3.50/bu. (LMP) ($.35/bu ÷ $3.50/bu = .100 DF). The QAF of .900 is determined by taking 1.000 minus .100 DF.

EXHIBIT 20

SETTLEMENT OF CLAIM WHEN INSURED HAS LESS THAN 100% SHARE

QUESTION 4 A: For (tenant) Farmer Brooks' claim being worked by the Speedy Service Insurance Company on January 29th, how might the production be shown on the production worksheet and after any adjustment for quality, what would be the unit's production to count?

***ANSWER 4 A:** Farmer Brook's (tenant) PW Section II – Harvested Production (For Illustration Purposes Only). By January 29th, the disposition of Farmer's Brooks production was known.

MEASUREMENTS	GROSS PRODUCTION	ADJUSTMENTS TO HARVESTED PRODUCTION				
Bin Measurements, Weight Tickets, etc.	Bu. Tons Lbs Cwt.	Factor	Test Weight	Adjusted Production	Quality Factor	Prod. To Count
Dunn's 40% of 1,000 bushel load	400.0			400.0	.850	340.0
Brook's 60% of 1,000 bushel load	600.0			600.0	.900	540.0
					Total	880.0

QUESTION 5 A: Which Section of the SPOI Quality Statements applies to Farmer Dunn (landlord) and what QAF is used for his share?

ANSWER 5 A: Section C 2 of the SPOI applies because the production was transported directly from the field to the elevator, commercially stored, and then sold prior to 60 days after the calendar date for the EOIP. The QAF for farmer Dunn's share is .850 (1.000 minus .150 DF). The DF is determined by adding the $0.25/bu.RIV for Aflatoxin plus $0.35/bu. RIV for test weight divided by $4.00/bu.LMP.

QUESTION 6 A: For (landlord) Farmer Dunn's claim being worked by the Barely-In-Time Insurance Company on January 29th, how might the production be shown on the production worksheet and after any adjustment for quality, what would be the unit's production to count?

ANSWER 6 A: Farmer Dunn's (landlord) PW Section II – Harvested Production (For Illustration Purposes Only)

MEASUREMENTS	GROSS PRODUCTION	ADJUSTMENTS TO HARVESTED PRODUCTION				
Bin Measurements, Weight Tickets, etc.	Bu. Tons Lbs Cwt.	Factor	Test Weight	Adjusted Production	Quality Factor	Prod. To Count
Dunn's 40% of 1,000 bushel load	400.0			400.0	.850	340.0
Brook's 60% of 1,000 bushel load	600.0			600.0	.900	540.0
					Total	880.0

EXHIBIT 20

SETTLEMENT OF CLAIM WHEN INSURED HAS LESS THAN 100% SHARE

Scenario 1 – Corn – PART B

Assume that Farmer Dunn (landlord) stored his grain on the farm and then delivered and sold his production on January 20th for $3.60/bu. The LMP on January 20th was $4.15/bu. The elevator applied a $0.30/bu. RIV for Aflatoxin, and a $0.25/bu. RIV for test weight. Farmer Brooks' scenario is the same as stated in Scenario 1 Corn–Part A above.

QUESTION 1 B:

Which Section of the SPOI Quality Statements applies to this scenario for Farmer Dunn (landlord) and what QAF is used on Farmer Dunn's share in this scenario?

ANSWER 1 B:

Section (C2b – **For Group 1 QA Statements** – C2c – **For Group 2 QA Statements**) is applicable to this scenario since Farmer Dunn's (landlord) farm-stored his Aflatoxin infected production instead of delivering directly from the field to the elevator. The total DF is .141 determined by adding .100 DF (DF for 25 ppb from chart in Section C2b) to .041 DF (DF for 48 lb. test weight from chart in Section A). Section C2b indicates to add any applicable DFs from sections A or B to the pre-established DF for the applicable mycotoxin in this section. The QAF is .859 (1.000 minus .141 DF).

QUESTION 2 B**:** For (landlord) Farmer Dunn's claim being worked by the Barely-In-Time Insurance Company on January 29th, how might the production be shown on the production worksheet, and after any adjustment for quality, what would the unit's production to count be?

ANSWER 2 B: Farmer Dunn's (landlord) PW Section II – Harvested Production (For Illustration Purposes Only)

MEASUREMENTS	**GROSS PRODUCTION**	**ADJUSTMENTS TO HARVESTED PRODUCTION**				
Bin Measurements, Weight Tickets, etc.	Bu. Tons Lbs Cwt.	Factor	Test Weight	Adjusted Production	Quality Factor	Prod. To Count
Dunn's 40% of 1,000 bushel load	400.0			400.0	.859	343.6
Brook's 60% of 1,000 bushel load	600.0			600.0	.900	540.0
					Total	883.6

QUESTION 3 B: Based on this Scenario, how might the production for Farmer Brook (tenant) be shown on the Production Worksheet, and after any adjustment for quality, what would the unit production to count be?

ANSWER 3 B: It would look the same the PW illustration shown in Answer 2 B above.

EXHIBIT 20

SETTLEMENT OF CLAIM WHEN INSURED HAS LESS THAN 100% SHARE

EXAMPLE 3:

(Scenario 2 - Wheat)

This scenario involves HRW wheat. The calendar date for the EOIP is **October 31st**. Assume insurability requirements are met (e.g. timely planted, insurable type and practice, etc.). Farmer Bob (Tenant) shares a unit of wheat 50/50 with Sally Mae (Landlord). Both shareholders have crop insurance with the same AIP. Due to insurable causes, it is expected there will be quality issues. Prior to harvest, they file a timely notice of loss and notify their company that a portion of the unit would be put in a bin containing poor quality wheat from a previous crop year. The previous year's crop in the bin is properly measured and documented, but the quality of this grain was not determined. Then, on July 7th, the crop is harvested and 1,000 bushels are delivered to the Elevator for commercial storage to be sold at a later date and 500 bushels are farm stored (as later determined by the adjuster's bin measurements).

The farm stored and the delivered wheat had been properly sampled, graded, and tested prior to being stored with the previous year's production. For this example, assume the entire 1,500 bushels contain **5.5 ppm Vomitoxin** as the only concern (e.g. moisture, test weight, etc. were all OK).

On August 10th, Farmer Bob sold his portion of the 1,000 bushels (500 bushels) that had been commercially stored at the Elevator for $3.00/bu. The RIV was $2.00/bu. and the LMP was $5.00/bu. On August 21th, Sally Mae sold her portion of the 1,000 bushels for $3.30/bu. The RIV was $1.90/bu. and the LMP that day was $5.20/bu.

On August 30th, the wheat that had been farm stored and commingled with other low quality wheat from the previous crop year was delivered to the elevator and sold. The elevator's test made upon delivery of this commingled wheat production showed **3.5 ppm Vomitoxin** plus **25% kernel defects**. This production sold for $3.20/bu. The LMP is still $5.20/bu. The elevator applied a $1.50/bu. RIV for the Vomitoxin and a $0.50/bu. RIV for the defects.

QUESTION 1: Which Section of the SPOI Quality Statements would apply to the production sold on August 10th and August 21st? What section would apply to the wheat sold on August 30th?

ANSWER 1: For the production that was sold on August 10th and 21st, Section C1a applies since the production was sold prior to 60 days after the calendar date for EOIP. Section C1a applies since production with Vomitoxin may be sampled from storage.

***QUESTION 2:** When is the earliest these claims could be finalized?

ANSWER 2: The earliest it could be finalized was August 21st because this was the date when ALL of the commercially stored and farm stored grain for the unit was sold.

QUESTION 3: Would the total production to count be the same or different on each sharing party's claim (PW)?

ANSWER 3: The same.

SETTLEMENT OF CLAIM WHEN INSURED HAS LESS THAN 100% SHARE

QUESTION 4: When listing the gross production for the unit, what might be the fewest required number of line items on Sally Mae's Production Worksheet? Would it be the same for Farmer Bob's PW?

ANSWER 4: Three. One line for the 500 bushels sold on August 10th, one line for the 500 bushels sold on August 21st, and one line for the 500 bushels sold on August 30th that was farm-stored. It would be the same for both insureds.

QUESTION 5: What would be the QAF for Sally Mae's share of production (500 bushels) that was sold on August 10th? What would be the QAF for Farmer Bob's share of production (500 bushels) sold on August 21st? What was the QAF for the Sally Mae's share (250 bushels) and Farmer Bob's share (250 bushels) of the farm-stored production and then sold on August 30th

ANSWER 5: The QAF for Sally Mae's share of production that was sold on August 10th is .600 ($2.00/bu. RIV÷ $5.00/bu. LMP = .400 DF. 1.000 - .400 DF = .600 QAF)**.**

The QAF for Farmer Bob's share of production that was sold on August 21st is .635 ($1.90/bu. RIV ÷ $5.20/bu. LMP = .365 DF. 1.000 - .365 = .635 QAF).

The QAF for the Sally Mae's and Farmer's Bob's share of the farm-stored production that was sold on August 30th is .712 ($1.50/bu. RIV (for the Vomitoxin) ÷ $5.20/bu. LMP = .288 DF. 1.000 - .288 DF = .712 QAF). A DF for the defects was not allowed to be included in determining the QAF because defects were not documented as being in this year's insured crop.

QUESTION 6: What if the farm-stored production from the current year's production had not been tested for Vomitoxin prior to storing and commingling with the previous year's production nor had the previous year's production been tested for mycotoxins prior to storing with the current year's production?

ANSWER 6: No QAF would be allowed for Vomitoxin since there is no way of knowing whether the Vomitoxin was from the previous' year's production or the current year's production.

QUESTION 7: What if prior to storing the current year's production with the previous year's production no samples were pulled by the adjuster to be submitted for grading of covered quality deficiencies; e.g., low test weight, kernel damage, etc.?

ANSWER 7: No QA would be allowed.

EXAMPLE 4:

(Scenario 3 - One Sharing Party Insured and One Sharing Party Not Insured)

Assume there is a landlord/tenant arrangement where the landlord has 40% share and the tenant has 60% share. The tenant has a policy on the 60% share but the landlord is uninsured. We can account for 100% of the gross production and all of the quality deficiencies. However, the uninsured landlord will not divulge whether or not he/she has sold, used, fed or destroyed any of their share of the production or if sold, what was received.

EXHIBIT 20

SETTLEMENT OF CLAIM WHEN INSURED HAS LESS THAN 100% SHARE

QUESTION 1: If we assume all of the grain is eligible for quality adjustment (and does not have zero value) under the terms of **Section A** in the SPOI. Can the quality DF be determined for the uninsured landlord's share of the production? How soon could the tenant's claim be worked?

***ANSWER 1:** Yes. The claim could be worked as soon as possible once harvest was complete. (If the grain had zero value, the tenant could receive a 1.000 DF on the tenant's share if that 60% of production was destroyed in an acceptable manner. The landlord's 40% share would still receive the applicable Section A chart DF since disposition cannot be verified.)

QUESTION 2: Assume the grain is eligible for quality adjustment under the terms of **Section B** in the Special Provisions of Insurance. Can the quality discount factor be determined for the uninsured landlord's share of the production? How soon could the tenant's claim be worked?

ANSWER 2: No. The claim could not be worked until the earlier of knowing the disposition of the landlord's share of the crop or 60 days after the calendar date for the end of the insurance period. We must wait for the 60th day after the calendar date, in case prior to the 60th day, the landlord elects to disclose the disposition of his/her share of the production.

At 60 days or more after the calendar date for the end of the insurance period, in accordance with Informational Memorandum PM-07-026, if the uninsured landlord will not divulge the disposition of his/her 40% of the production, the landlord's 40% of the production will be considered undamaged production. The SPOIs state that for production sold to a disinterested third party prior to 60 days after the calendar date for the EOIP, the DF for such production will be the RIV applied by the buyer; or for production that remains unsold and unfed 60 days or more after the calendar date for the EOIP, or sold to other than a disinterested third party, fed, or used in a manner other than feed prior to 60 days after the calendar date for the EOIP, the DF for such production will be .500. If the uninsured landlord will not divulge the disposition of the grain, a quality DF cannot be determined for the landlord's 40% of the production.

QUESTION 3: Assume the grain is eligible for quality adjustment under the terms of **Section (C 4 – For Group 1 QA Statements, C 3 – For Group 2 QA Statements)** in the SPOIs. Can the quality DF be determined for the uninsured landlord's share of the production? How soon could the tenant's claim be worked?

ANSWER 3: No. The claim cannot be worked unless the insured can prove that all of the unit's production has been sold, used, fed or destroyed.

EXAMPLE 5:

(Scenario 4 – Crop Disposition)

This scenario involves a unit of grain consisting of several loads that have been delivered to an Elevator. The elevator is basing settlement with the producer on an average test weight of 48.1 lbs. for all production sold or to be sold at a later times. Some of the grain is of good quality, some falls under the terms of **Section A** in the SPOIs and some falls under the terms of **Section B** in the SPOIs.

For this example, assume all insurability requirements have been met, the insured crop is corn at 100% share and the only quality concern is test weight (no moisture or FM, etc.). The adjuster is

working the claim on November 30th. The insured decided to commercially store 300 bushels of the corn at the elevator.

Corn Delivered on November 4
Load #1 = 600.0 bushels at 53.0 TW
Load #2 = 400.0 bushels at 47.0 TW
Load #3 =800.0 bushels at 45.0 TW

The insured's delivery/storage receipt for the 300 bushels delivered on Nov. 4th is as follows:

Load # 3 =300 bushels at 48.1 lb. TW average.

Disposition of the 1,800 bushels as of November 30th (sold by volume based on average test weight)
900.0 bushels were sold at $3.00/bu. on November 8 with a $3.75/bu. LMP.
600.0 bushels were sold at $3.25/bu. on November 20 with a $4.00/bu. LMP.
300.0 bushels remains unsold.

QUESTION 1: Based on the above information, can the claim be settled on November 30th?

ANSWER 1: Yes. Section B2 of the SPOI indicates the DF will be .500 for all unsold production, plus any additional DFs in Section C that may apply." Therefore, if on the date of adjustment (November 30th), the production is unsold and the insured wishes to settle the claim, the claim can be settled rather than waiting until 60 days after the calendar date for the EOIP.

QUESTION 2: Based on the above information, how might this insured's production be shown on the Production Worksheet and what would be the correct quality adjustment factor for each line item entry?

ANSWER 2: PW Section II – Harvested Production (For Illustration Purposes Only)

Load #1 does not qualify for quality adjustment. Load #2 qualifies for qualify adjustment under section A of the SPOI. Because the elevator is basing grain settlement on an average test weight we do not know what portion of load #3's production should be attributed to production that was sold on November 8 at $3.00/bu., sold on November 20 at $3.25/bu., and what portion was not sold. Load #3 also qualifies for quality adjustment due to low test weight under both sections B1 and B2 of the SPOI. Load #3 therefore must be prorated based upon the percentage of bushels for each disposition to the insured's share of the total bushels. In this example, load #3 is apportioned across three different dispositions after calculating the "proration factors" as follows:

900 bu. (sold @ $3.00/bu.)/1800 bu. = .5000;
600 bu. (sold @ $3.25/bu.)/1800 bu. = .3333;
300 bu. unsold at time of adjustment)/1800 bu. = .1667.

EXHIBIT 20

SETTLEMENT OF CLAIM WHEN INSURED HAS LESS THAN 100% SHARE

ENTRIES FOR THE CLAIM FORM:

MEASUREMENTS	GROSS PRODUCTION	ADJUSTMENTS TO HARVESTED PRODUCTION				
Bin Measurements, Weight Tickets, etc.	Bu. Tons Lbs Cwt.	*Proration Factor	Test Weight	Adjusted Production	Quality Factor	Prod. To Count
Load #1	600.0		53.0	600.0	N/A	600.0
Load #2	400.0		47.0	400.0	.948	379.1
Load #3 sold @ $3.00/bu.	*{800.0}	.5000	45.0	400.0	.800	320.0
Load #3 sold @ $3.25/bu.	*{800.0}	.3333	45.0	266.6	.813	216.7
Load #3 unsold	*{800.0}	.1667	45.0	133.4	.500	66.7
					Total	1582.5

QUESTION 3: How might the production be listed differently if this unit had involved another sharing party?

ANSWER 3: In this example, load #3 would be divided and split out additionally according to the disposition of each party's share. Loads #1 and #2 would remain unaffected.

EXHIBIT 21

STANDARD BUSHEL (STANDARD TEST) WEIGHTS FOR BUSHEL UNIT OF MEASURE

A Table

CROP	WEIGHT PER BUSHEL (LBS.)
Avocados (Florida) 1/	55
Barley 1/	48
Barley, Malting 1/	48
Dry Beans 2/	60 2/
Corn, Shelled 1/, 3/	56 1/
Corn, Ear husked 1/, 3/	70 1/
***	***
***	***
Flaxseed 1/	56 1/
Grain Sorghum 1/	56 1/
Hybrid Seed Corn 1/	56 1/
Hybrid Sorghum 1/	56 1/
Millet 1/	50 1/
Oats 1/	32 1/
Peaches	50 1/
Peas, Dry 2/	60 2/
Pears	Refer to the Pear LASH.
Popcorn 2/	56 2/
Rice 2/	45 2/
Rye 1/	56 1/
Safflowers 2/	35 2/
Soybeans 1/	60 1/
Sunflower Seed (Oil) 2/	29 2/
Sunflower Seed (Non-oil) 2/	25 2/
Wheat 1/	60 1/
Wild Rice, Cultivated 2/	25. for MN 2/ 29 for CA 2/

1/ These crops have bushel units of measure.

2/ These crops have a pound unit of measure and the standard test weight is not used in the farm-stored calculation of gross production.

3/ For corn insured as grain that is to be harvested and ground and stored as corn and cob meal (ground ear corn) or chopped for earlage, a pre-harvest appraisal is required to establish the production. (Refer to PAR. 85.)

B For crops that have a bushel unit of measure. If settlement sheets provide scale weights (i.e., pounds) instead of bushel weights, determine the gross bushel amount by dividing the total gross pound weight of production (before adjustments) shown on the settlement sheet by the standard bushel weight; e.g., 50,000 pounds of shelled corn divided by 56 (standard bushel weight) = 892.86 rounded to tenths – 892.9 bushels.

C For crops that have a pound unit of measure. In the rare case that a settlement sheet showed bushels for a crop having pound unit of measure, then determine the pounds of production by multiplying the total bushel weights (before adjustments) by the standard bushel weight; e.g., 50 bushels of safflowers times 35 (standard bushel weight) = 1,750 pounds.

EXHIBIT 22
SCP FORM STANDARDS

1 General Information

Refer to PAR. 137 for authorized crops and other information pertaining to SCP Claim criteria.

2 Form Standards and Completion Instructions

All of the following form standards and completion instructions are **"Substantive" (required).**

A Required Statements and Other General Form Requirements

(1) The Privacy Act and Non-Discrimination statements are required statements that must be printed on the form or provided as a separate document. These statements are not shown in the example form in this Exhibit. The current Non-Discrimination Statement and Privacy Act Statement can be found on the RMA website at http://www.rma.usda.gov/regs/required.html or successor website.

(2) The Certification statement required by the current DSSH must be included on the form directly above the insured's signature block immediately followed by the statement below:

I also certify that all of the supporting documents included with this form are true and complete. I understand that the certified information on this form (including the attached supporting documents) may be used to determine my loss, if any, to my insured crop(s) unit(s) submitted on this form. I also understand that this form and supporting papers are subject to audit and approval by the insurance provider.

(3) For additional signature and distribution requirements for these statements, refer to section 10 G of the DSSH. Also, refer to the DSSH for other requirements general to all forms; e.g., point size of font, submission requirements for forms approval, etc.

C Required Item Titles and Completion Instructions for These Items

(1) Title of the form: Simplified Claims Qualification Process and Notice of Loss.

(2) The following item numbers and statements correspond to the example form that has been completed to illustrate how to complete all entries, except the last 5 items are not shown on the illustrated form.

(2) The insured is required to complete items 1-27 and items 29 and 31. The Insurance Provider Verifier will complete item 30.

ITEM #	ITEM TITLE	COMPLETION INSTRUCTIONS
1	Insured's Name	**Insured's Instructions:** Enter your name exactly as shown on the most recent Policy Confirmation.
2	Policy Number	**Insured's Instructions:** Enter the policy number from your most recent Policy Confirmation.
3	My Insurance Agent is:	**Insured's Instructions:** Enter the name of your crop insurance agent.
4	My Phone Number is:	**Insured's Instructions:** Enter your area code and phone number where you can be reached.
5	Town/State Where You Live:	**Insured's Instructions:** Enter the Town/State where you reside.

C Required Item Titles and Completion Instructions for These Items (Continued)

ITEM #	ITEM TITLE	COMPLETION INSTRUCTIONS
6	Crop (only one per form)	**Insured's Instructions:** Enter the name of the insured crop for which you are filing the loss (list only one crop per SCP form). If you have other insured crops you wish to file a SCP claim on, complete a separate SCP for each crop.
7	Crop Year	**Insured's Instructions:** Enter the crop year for which the claim is applicable.
8	County Where Crop is Grown (only one per form)	**Insured's Instructions:** Enter the County where the crop/unit is located (list only one per SCP form).
9	State Where Crop is Grown (only one per form)	**Insured's Instructions:** Enter the State where the crop/unit is located (list only one per SCP form.
10	Non-Loss (N-L) Units and Est. Prod. Per Acre	**Insured's Instructions:** Enter in each sub-block (e.g., 10a) any non-loss unit (for the crop listed in item 6) you have and the estimated production per-acre of the non-loss unit. If all of the units for the crop in item 6 are loss units, enter N/A.
11	Loss Unit #	**Insured's Instructions:** Enter the unit number (s) of the crop for which you are claiming a loss, entered on separate lines.
12	Cause of Loss	**Insured's Instructions:** Enter in 12a (Primary Cause of Loss), the insured cause of loss that contributed to greater than fifty percent of the damage of the crop and the percentage amount for the unit number listed on this line; e.g., excess precipitation; e.g., drought, 60%. Enter in 12b (Secondary Cause of Loss), the insured cause that contributed to less than fifty percent of damage of the crop and the percentage amount for the unit number listed on this line; e.g., hail, 30%. If there is no secondary cause of loss, leave blank.
13	Date of Damage	**Insured's Instructions:** Enter the month during which most of the insured damage (including progressive damage) occurred for the primary (item 13a) and secondary (item 13b) causes of loss, if applicable, for the unit number on this line. Include the specific date where applicable as in the case of hail damage; e.g., June 15. If there was no Secondary Cause of Loss (item 13b), do not make an entry.
14	Harvest Completion Date	**Insured's Instructions:** Enter the date the entire acreage on the unit listed on this line was harvested.
15	Companion Contract Yes/No?	**Insured's Instructions:** For the unit on this line, if you are sharing in the crop with another person and that person has crop insurance on this crop, enter "Yes." If the person does not have crop insurance on this crop, enter "No." If you do not know, enter "Do not know."
16	Assignment of Indemnity Yes/No?	**Insured's Instructions:** For the unit on this line, enter "Yes" if an Assignment of Indemnity is on file for the crop in item 6 for the crop year; otherwise answer "No."
17	Transfer of Right to Indemnity Yes/No?	**Insured's Instructions:** For the unit or partial unit on this line, enter "Yes" if a Transfer of Right to Indemnity is on file for the crop in item 6 for the crop year. If no Transfer of Right To Indemnity is on file, check "No".
18	Has all acreage of the loss units listed in item 11 been harvested?	**Insured's Instructions:** Check "Yes" only if ALL of the units you listed in item 11 have been harvested; otherwise, check "No." If you checked "No," list the unit numbers for the units listed in item 11 that have not been harvested.
19	Has all of the production from the loss unit(s) listed in item 11 above been sold or commercially stored?	**Insured's Instructions:** Check yes only if all of the production for ALL of the units you listed in item 11 above has been sold or commercially stored; otherwise, answer "No." If you checked, "No," list the unit numbers for any of the units that have not been sold or commercially stored.

C Required Item Titles and Completion Instructions for These Items (Continued)

ITEM #	ITEM TITLE	COMPLETION INSTRUCTIONS
20	Have you completed harvest of all insurable acreage for all crops on your policy? (This includes the crop you listed above as well as any other crop you may have on your policy).	**Insured's Instructions:** Check "Yes" only if ALL crops insured under this policy (including the crop listed in item 6 above) have been harvested. If any crop has not been harvested, check "No." If "No" was checked, list the crops not harvested.
21	Do you anticipate any loss units for any other crop not listed in item 11 for this crop year?	Insured's Instructions: Check "Yes" only if you anticipate or know if you have loss units for any other crop not listed in item 11 for the crop year. Otherwise, check "No."
22	Has any production from any acreage from the units listed in item 11 above been farm stored, fed to livestock, or saved for seed?	**Insured's Instructions:** Check "Yes" if production from ANY of the loss units listed in item 11 above is farm-stored or has been fed, or saved for seed; otherwise check "No". If you checked "NO," list the unit number(s) for which "No applies.
23	Do you have third party written verification (i.e., summary/settlement sheets) available for 100 percent of the production from all units listed in item 11 above? (This must include **both** landlord and tenant shares, when applicable.)	**Insured's Instructions:** Check "Yes" only if this is true for ALL units listed in item 11 above; otherwise answer "No. Such documents must be attached to this form.
24	Is damage for the loss units listed in item 11 similar to other farms in the area?	**Insured's Instructions:** Check "Yes" only if this is true for all units listed in item 11; otherwise, answer "No." If "No" is checked, list the unit number of any unit listed in item 11 that does not have similar damage and explain why that particular unit does not have similar damage.
25	Are you or any member of your household directly associated with the Federal Crop Insurance program (i.e., agent, agency owner, loss adjuster, FCIC employee, insurance provider employee or contractor)?	**Insured's Instructions:** Check "Yes or "No" as applicable.
26	Was all acreage of your insured crop(s) in the county, in which you have a share, reported by you on your acreage report?	Check "Yes" only if all acreage of your insured crop(s) in the county was reported on your acreage report; otherwise, check "No." If you checked "No," list the unit or location where the acreage was not reported.
27	On the specific loss unit(s) listed in item 11 above, is your Summary of Coverage correct for:	
	a. Your share?	**Insured's Instructions:** For all of the units listed in item 11, check "Yes" only if the share you reported on your acreage is correct for all of the units listed in item 11; otherwise answer "No." If "No" is checked, list the unit number(s) for which "No" applies and explain why.
	b. The legal description(s) and/or the FSA Farm Serial Numbers?	**Insured's Instructions:** For all of the units listed in item 11, check "Yes" only if the legal description(s) and/or the FSA Farm Serial Numbers reported on your acreage report are correct for ALL of the units listed in item 11; otherwise check "No. If "No" is checked, list the unit number(s) for which "No" applies.

C Required Item Titles and Completion Instructions for These Items (Continued)

ITEM #	ITEM TITLE	COMPLETION INSTRUCTIONS
27 (Cont.)	On the specific loss unit(s) listed in item 11 above, is your Summary of Coverage correct for:	
	c. The practice actually carried out by you (i.e., If you reported your practice as irrigated, was water applied at the proper time and rate)?	**Insured's Instructions:** For all of the units listed in item 11, check "Yes" only if the practice(s) you actually carried out agrees with the practice(s) for ALL of the units listed in item 11; otherwise check "No." If "No" is checked, list the unit number(s) for which "No" applies.
	d. The type or variety (if applicable)?	**Insured's Instructions:** For all of the units listed in item 11, check "Yes" only if the type or variety reported on your acreage report is correct for ALL of the units listed in item 11; otherwise check "No." If "No" is checked, list the unit number(s) for which "No" applies and enter the correct type or variety for the each unit listed.
	e. The total acreage for each unit listed in item 11 above (if measured or re-measured) would be within 5% of what you reported on your acreage report?	**Insured's Instructions:** For all of the units listed in item 11, check "Yes" only if the total acreage for each unit listed in item 11 (if measured or re-measured) would be within 5% of what you reported on your acreage report; otherwise, check "No." If you checked "No," list the units listed in item 11 for which "no" applies.
28	**Required Statements pre-printed above the insured's certification/signature blocks:** **This form serves as written verification of your notice of loss and as an aide in determining qualified insureds for the SCP. We may rely on the information you provide on (or attach to) this form in making material determinations in the preparation of your claim. Once this completed Notice of Loss Form and supporting documentation has been received by your insurance provider, it will be determined whether or not your claim qualifies for the SCP. If it DOES qualify, the appropriate claim for indemnity form(s) will be prepared and may need to be sent to you for your signature if the AIP determines when reviewing this information with you over the phone that a correction is needed. Otherwise, the signature on this SCP form will serve as the signature for each Claim for Indemnity form to which this information was transferred, and a copy and a copy will be mailed to you. The claim form(s) will contain all the necessary data and production information to complete your claim. If qualified, you will have your claim processed in the most expedient manner possible. You will not need to wait for an adjuster. The SCP is subject to an in-field review for compliance to established policies and procedures. If any of the unit(s) listed in item 11 above DOES NOT qualify for the SCP, you will be contacted in the near future by a claims representative to set up an appointment to adjust your loss on that or all units listed above.** **Supporting documentation must be attached to this form and delivered to the address provided by your agent or insurance provider**. **You must attach either a settlement sheet(s), summary sheet(s) or similar third party ledger(s)** that accounts for **all** production from any crop unit you have listed above. Individual load tickets **will not** qualify. Individual loads on any settlement/summary sheet(s) must be clearly marked to indicate which unit they came from. If you have FSA or similar measurement service such as utilization of Global Positioning Systems, remote sensing devices, etc., for the current crop year, please attach copies and indicate who made the measurement. **In all cases you must attach copies of maps identifying each field, crop and acreage by loss unit.** The per unit acreage used in calculating any indemnity will be the lesser of your reported acres or your actual planted acres.	
29	Insured's Signature and Date of Signature	**Insured's Instructions:** The insured or the insured's authorized representative signs the form and enters the date signed.
30	**Company Use ONLY:** Verifier's Signature, Code #, and Signature Date	**VERIFIER'S COMPLETION INSTRUCTIONS** After the verifier has verified that the crop/unit(s) has met all of the required criteria for processing the claim as an SCP claim in (including the required documentation provided with this form), has transferred the information to a PW and attached a copy of this form to the PW, the verifier signs the form, enters the verifier's code number, and enters the signature date the verifier signs the form. If there is any crop/unit listed above that does not meet the qualifications, the verifier is to list these on the form.
31	Page ____of _____	**Insured's Instructions:** Enter the page numbers (Example: Page 1 of 1, Page 1 of 2, Page 2 of 2, etc.).

EXHIBIT 22
SCP FORM STANDARDS

FOR ILLUSTRATION PURPOSES ONLY
SIMPLIFIED CLAIMS PROCESS (SCP) QUALIFICATION AND NOTICE OF LOSS

For proper service, you must fill in all blanks and answer all questions as completely as possible.

1. Insured's Name (Please Print)				2. Policy Number	
I. M Insured				*XXXXX*	
3. My insurance Agent is: John Doe.		4. My phone number is: (XXX) XXX-XXXX		5. Town/State Where You Live: Any Town, Any State	
6. Crop (only one per form) *Corn*	7. Crop Year *XXXX*	8. County Where Crop is Grown: (Only one per form): *Adams*		9. State Where Crop is grown (only one per form): *Any State*	
10. Non-Loss (N-L) Units and Est. Prod. Per Acre	10a N-L Unit *CC103*	10b N-L Unit *CC104*	10c –N-L Unit *N/a*	10d N-L Unit *N/a*	10e N-L Unit *N/a*
	10 a Est. Prod *150 bu.*	10b Est. Prod. per Acre *175 bu.*	10c Est. Prod. per Acre *N/a*	10d Est. Prod. per Acre *N/a*	10e Est. Prod. per Acre *N/a*

11. Loss Unit #	12. CAUSE OF LOSS 12.a. Primary Cause/ %	12. b . Secondary Cause/ %	13. DATE OF DAMAGE 13a Primary Cause Date Of Damage	13b.. Secondary Cause Date Of Damage	14. Harvest Completion Date	15. Companion Contract-Yes/No?	16. Assignment Of Indemnity-Yes/No?	17. Transfer Of Right To Indemnity-Yes/No?
CC101	*Excess Moisture*	*Hail*	*June*	*June 15*	*October 10*	*Yes*	*Yes*	*No*
CC102	*Excess Moisture*	*Hail*	*June*	*June 15*	*October 15*	*Yes*	*Yes*	*No*

NOTE: Please use a separate form for additional loss units.

Carefully consider each of the following questions and check the "Yes" or "No" box. YES NO

18. Has all acreage of the loss unit(s) listed in item 11 above been harvested? If No, list the unit number(s) for which "No applies: _____. √

19. Has all of the production from the loss unit(s) listed in item 11 above been sold or commercially stored? If you answered no, list the applicable unit numbers meeting "no" *Unit 102*. √

20. Have you completed harvest of all insurable acreage for all crops on your policy? (This includes the crop you listed above as well as any other crop you may have on your policy). If you answered No, list the crops not harvested: *soybeans*. √

21. If you answered "NO" to the above question, do you anticipate loss units for any other crop not listed in item 11 above for this crop year? √

22. Has any production from any acreage from the units listed in item 11 above been farm stored, fed to livestock, or saved for seed? If "No," list the unit number(s) for which "No" applies *Unit 102*. √

23. Do you have third party written verification (i.e., summary/settlement sheets) available for 100 percent of the production from all units listed in item 11 above? (This must include **both** landlord and tenant shares, when applicable.) √

24. Is damage for the loss units listed in item 11 similar to other farms in the area? If "No," list the unit(s) for which "No" applies and explain: *Unit CC2 – Most other farms in the area received no hail damage.* √

25. Are you or any member of your household directly associated with the Federal Crop Insurance program (i.e., agent, agency owner, loss adjuster, FCIC employee, insurance provider employee or contractor)? √

26.. Was all acreage of your insured crop(s) in the county, in which you have a share, reported by you on your acreage report? If "No," list the unit or location where the acreage was not reported _____. √

27.. On the specific loss unit(s) listed in item 11 above, is your Summary of Coverage correct for:

a. Your share? If "No," list the unit(s) and explain here: _____. √

b. The legal description(s) and/or the FSA farm serial number? If "No," list the unit(s) for which "No" applies: *Unit CC2*. √

c. The practice actually carried out by you (i.e., If you reported your practice as irrigated, was water applied at the proper time and rate)? If "No," list the unit(s) for which no applies: _____. √

d. The type or variety (if applicable)? If "No," list the unit(s) numbers for which "No" applies and enter the correct type or variety for each unit listed _____: _____. √

e. The total acreage for each loss unit listed in item 11 above (if measured or re-measured) would be within 5% of what you reported on your acreage report? If "No," list the unit(s) for which "No"applies: _____ √

28. This form serves as written verification of your notice of loss and as an aide in determining qualified insureds for the SCP. We may rely on the information you provide on (or attach to) this form in making material determinations in the preparation of your claim. Once this completed Notice of Loss Form and supporting documentation has been received by your insurance provider, it will be determined whether or not your claim qualifies for the SCP. If it DOES qualify, the appropriate claim for indemnity form(s) will be prepared and may need to be sent to you for your signature if the AIP determines when reviewing this information with you over the phone that a correction is needed. Otherwise, the signature on this SCP form will serve as the signature for each Claim for Indemnity form to which this information was transferred, and a copy and a copy will be mailed to you. The claim form(s) will contain all the necessary data and production information to complete your claim. If qualified, you will have your claim processed in the most expedient manner possible. You will not need to wait for an adjuster. The SCP is subject to an in-field review for compliance to established policies and procedures. If any of the unit(s) listed in item 11 above DOES NOT qualify for the SCP, you will be contacted in the near future by a claims representative to set up an appointment to adjust your loss on that or all units listed above.

Supporting documentation must be attached to this form and delivered to the address provided by your agent or insurance provider. **You must attach either a settlement sheet(s), summary sheet(s) or similar third party ledger(s)** that accounts for **all** production from any crop unit you have listed above. Individual load tickets **will not** qualify. Individual loads on any settlement/summary sheet(s) must be clearly marked to indicate which unit they came from. If you have FSA or similar measurement service such as utilization of Global Positioning Systems, remote sensing devices, etc., for the current crop year, please attach copies and indicate who made the measurement. **In all cases you must attach copies of maps identifying each field, crop and acreage by loss unit.** The per unit acreage used in calculating any indemnity will be the lesser of your reported acres or your actual planted acres.

This form example does not illustrate all required entry items or statements; e.g., signatures, etc. Refer to the SCP Form instructions above for all requirements.

EXHIBIT 22
SCP FORM STANDARDS

(RESERVED)

EXHIBIT 23

INDEX

Abandon (abandoned or abandonment).....16, 17, 147, 148, 168, 190, 209, 338, 389, 391, 438
Abbreviations or Acronyms.....5, 437
Absentee Insured 187
Acceptable Destruction Methods.....163
Acreage - First Insured Crop 43, 94, 101, 102, 103, 104, 107, 108, 116, 117, 118, 119, 122
Acreage - Late-filed ..... See Late-filed Acreage Report
Acreage - Second Crop Acreage..... *See* Second Crop Acreage
Acreage - Short-rated .....*See* Short-rated Acreage
Acreage Bypassed ..... *See* Bypassed Acreage
Acreage Decrease Requests.....60
Acreage Determinations 44, 67, 175, 192, 196, 197, 202
Acreage Measurement Service 191, 192
Acreage Report 22, 43, 60, 62, 155, 159
Acreage Report Errors, Correctable 60
Acreage Report Information Verification.....44, 175, 398, 413, 444
Acreage Report Reviews.....55, 67, 184
Acreage Reports - Revised ..... *See* Revised Acreage Reports
Acreage Under Contract With a Processor 95
Acronyms..... See Abbreviations or Acronyms
Actuarial Classification 15, 72, 73
Actuarial Documents ...6, 7, 45, 46, 58, 72, 73, 74, 89, 92, 94, 100, 109, 137, 139, 141, 181, 202, 337, 358, 367, 378, 379, 392, 395, 401, 402, 405, 406
Actuarial Documents, Using for Verification 72, 73
Actuarial Usage 72
Actuarial, Document Precedence 4, 73
Additional Coverage 2, 19, 61, 62, 73, 95, 107, 109, 115, 132, 133, 151, 389, 390, 413, 414, 415, 416, 417, 418, 420, 421, 422
Adjuster Responsibilities 7, 13, 54, 372
Adjuster's Checklist .....*See* Claim Checklist
Adjustments for Dockage ..... *See* Dockage
Adjustments for FM .....*See* Foreign Material
Adjustments for Foreign Material.....*See* Foreign Material
Adjustments for Moisture.....232, 261, 265, 269, 272, 317
Adjustments for Mycotoxins.....*See* Mycotoxins
Adjustments for Pack Factors.....*See* Pack Factor
Adjustments for Quality ..... *See* Quality Adjustment
Adjustments for Substances or Conditions.....*See* Substances or Conditions Injurious to Human or Animal Health
Adjustments for Test Weight ..... *See* Test Weight
Adjustments to Production.....301
Administrative Review 345, 369, 385, 386, 387
Adverse Weather.....187, 188, 224, 337, 374, 426, 427, 428
Aerial Photos 197, 221, 437
Aflatoxin.....10, 275, 280, 281, 286, 290, 291, 294, 296, 428, 444, 445
Agricultural Experts ...15, 88, 95, 99, 109, 115, 210, 222, 340, 342, 343, 369, 375, 376, 385, 390, 394, 395, 399, 400, 411
AIP Responsibilities.....7
Airplane Seeded.....366
APH Form.....42, 46, 59, 61, 137, 146, 356, 407

EXHIBIT 23

INDEX

APH Records....111, 114, 134, 412
APH Review....14, 134
Appeal....345, 385, 386
Application for Insurance.6, 22, 26, 28, 29, 30, 31, 32, 33, 34, 36, 37, 38, 39, 41, 51, 75, 99, 185, 371, 372, 390, 391, 395, 401, 402, 406, 411, 432, 433
Appraisal Deviations....1, 214
Appraisal Modifications....214
Appraisals 14, 50, 62, 84, 85, 89, 93, 147, 153, 164, 167, 168, 169, 175, 177, 180, 183, 184, 185, 186, 187, 195, 204, 208, 210, 211, 212, 213, 215, 216, 217, 221, 222, 224, 226, 240, 302, 333, 337, 338, 339, 341, 342, 351, 352, 367, 378, 391, 393, 411, 442
Appraisals - Deferred....*See* Deferred Appraisals
Appraisals - When Mechanically Unharvestable Crop....212
Appraisals - Zero....*See* Zero Appraisal
Appraisals Involving Average Row-width Measurements....214
Appraised Acreage....*See* Appraised Production
Appraised Production....70, 111, 167, 183, 215, 226, 277, 349, 362, 369, 374, 391, 408
Arbitration....345, 346, 369, 385, 386
Assignment of Indemnity....51, 52, 393
Authorizing Additional Time to Harvest After Calendar Date for the End of the Insurance Period....167
Authorizing Insured's Structure Markings, Load Records, and Combine Monitor Records....302, 303
Averaging FM Percentages....272
Averaging Moisture Determinations....272
Averaging Moisture Percentages....272
Bankruptcy....372, 373
Basic Unit 22, 59, 72, 131, 132, 133, 134, 137, 138, 139, 140, 141, 142, 356, 357, 360, 361, 405, 415, 416, 418
Blended Samples for Quality Adjustment....240, 241, 242, 278, 279
Broadcast Seeded....366, 383
Bypassed Acreage....223, 224, 225, 226
Calculation of Farm-stored Production....353, 354
CAT Coverage....4, 22, 35, 57, 62, 132, 133, 151, 160, 351, 352, 395, 403, 419
CAT Endorsement....*See* CAT Coverage
Cause of Loss Names and Codes....426, 427, 428
Center Pivot Irrigation System....79, 88, 134, 135, 136, 137, 220, 399
Certification Form..6, 150, 152, 158, 161, 163, 164, 165, 176, 187, 213, 237, 263, 264, 373, 374, 392, 442, 443, 444, 445, 446, 448
Chemical Carryover....374
Chemical Carryover Due to Adverse Weather....374
Chemical Damage Due to Uninsured Causes....161, 342, 343, 383
Chemical Hazards....143
Claim Checklist....15, 441, 442
Combine Monitor Records304, 306, 309, 465, *See* Authorizing Insured's Structure Markings, Load Records, and Combine Monitor Records
Commingled Production 42, 43, 45, 46, 71, 72, 101, 117, 204, 229, 303, 305, 306, 307, 355, 356, 359, 360, 362, 442
Companion Contracts....52, 53, 106, 174, 175, 176, 207, 394
Concealment or Misrepresentation....344
Conditioning Costs....247, 251, 257, 262
Conditioning Production....261, 262, 263, 276

INDEX

Cones 307, 315, 316
Cones, Inverted 315, 316, 323
Conflict of Interest.....8, 9, 12, 15, 54, 191
Conical Pile.....315, 316, 317, 322, 394
Consolidating Moisture and FM Percentages.....271
Contained Water.....16, 189, 338
Continuous Cropping Practice.....66, 74
Contract Changes.....41, 394
Contracted Acreage - Processor Contract.....*See* Processor Contract
Contracted Production - Speculative Contracts for Crops that Use Actual Value for QA.....259
Contracted Production - Speculative Contracts When RIVs Apply for QA 252
Controlled Substance Violation 21, 22, 143
Controversial Cases 333, 337
Controversial Claims 12, 165, 333, 336, 337, 410
Conventional Farming Practice 394
Conversions - Converting Circumference to Diameter 455, 457
Conversions - Fractions to Percents 313
Conversions - Metric to British Unit of Measurement 313
Conversions - Volume to Bushels, Hunderedweights, or Pounds 332
Conveyance.....242, 243, 303, 304, 305, 306, 315, 355, 395
Correctable Acreage Report Errors .....*See* Acreage Report Errors, Correctable
Corrected Claims.....120, 121, 150, 155, 167, 191, 236, 369, 370, 371, 374, 378
Corrected Claims Due to Appraised Acreage Later Harvested 167
Cover Crop 120, 395
Crop Codes 414, 415, 416, 417, 418, 420, 421, 422, 423
Crop Inspection 55, 56, 57, 58, 59, 62, 65, 67, 68, 69, 147, 149, 155, 185, 186, 187, 371
Crop Policy Information.....414, 415, 416, 417, 418, 419, 420, 421, 422, 423, 424
Cubic Feet Deductions 317, 323, 331
Death of Insured 371
Deferred Appraisal - When Crop is in Dormancy 210
Deferred Appraisals.....168, 210, 215, 216
Deferred Appraisals - When Frost/freeze Damage Has Occurred on Immature Crop 210
Deferred Appraisals - When Insufficient Soil Moisture Has Affected Seed Emergence.....210
Deferred Appraisals - When There is Damage From Hail or Blowing Sand.....210
Definitions.....3, 76, 78, 266, 267, 268, 271, 396, 399, 426, 427, 428, 471, 472
Delayed Claims 174, 175, 378, 444, 446
Delayed Notice 54, 173, 174, 175, 176, 177, 178, 396, 402
Denied Claims 164, 166
Destruction Exceptions.....263
Destruction Method 163, 164, 263, 264
Destruction Methods, Acceptable.....163, 264
Destruction of Production With Zero Market Value/Zero Production to Count ..162, 163, 235, 237, 246, 263, 264, 276, 285, 296, 444, 445, 446
Determined Acres.....58, 60, 61, 191, 192, 193, 194, 195, 197, 198, 369, 473, 474
Determining Farm-stored Production 296
Determining Insured Acres From Skip-row Planting Patterns 202
Deviations in Appraisal Methods ..... *See* Appraisal Deviations
DF.....*See* Discount Factor

EXHIBIT 23

INDEX

Discount Factor 5, 245, 246, 247, 248, 249, 250, 254, 255, 256, 257, 262, 285, 291, 292, 295, 378, 379, 408, 439
Disease.....92, 159, 281, 337, 366, 375, 428
Disease Control Measures 89
Disease Infestation 337, 366
Disease Infestation, Severe.....366
Disqualified for Insurance 21, 22
Dockage 229, 232, 238, 239, 259, 260, 265, 266, 267, 268, 269, 270, 271, 272, 273, 309, 314, 326, 332, 400, 470, 471, 472
Dockage, FGIS Definitions 470, 471, 472
Double Cropping.....101, 105, 108, 109, 111, 113, 114, 115, 119, 120, 122, 129
Double Fire Coverage 351
Drying Charges.....261
Dual Coverage.....*See* Duplicate Coverage
Duplicate Coverage 19, 20
Eligibility for Insurance.....19
Emergency Tillage.....367
End of the Insurance Period.....36, 37, 51, 52, 147, 156, 157, 167, 168, 169, 177, 189, 212, 251, 252, 254, 255, 256, 257, 262, 291, 393, 404, 410
End of the Insurance Period Final Indemnity Inspection 167
Endorsements 2, 6, 7, 43, 95, 239, 257, 390, 392, 398, 441, 442
Enterprise Units 139, 377, 397, 414, 415, 416, 417, 418, 424, 425
Entities.....19, 21, 27, 28, 29, 30, 33, 35, 36, 38, 107, 146, 238, 265, 297, 432, 433, 442
Entity Type.....28, 29, 30, 31, 32, 372
Establishing Actual Value of Production.....257
Establishing Production - General Information 204
Establishing Reduction in Value of Production.....251
Establishing Total Production of Non-loss Units.....204
Establishing Total Production on Damaged Units 204
Excess Coverage 20
Failure of Irrigation Equipment 76
Failure of the Irrigation Water Supply 76, 81, 83, 85, 86, 87
Failure or Breakdown of Irrigation Equipment 80
Failure to Follow Good Farming Practices 340, 343, 366
Failure to Qualify for Irrigated Practice 79
Farm-stored Production.....14, 204, 238, 244, 258, 266, 269, 273, 315, 316, 360, 361, 400, 407
Farm-stored Production Verified.....442
Farm-stored Production, Accounting for All.....297
Farm-stored Production-to-Count Formula.....317
Fed Production 206, 231, 232, 258, 302
Fed Production Verified 442
Final Indemnity Inspection - End of the Insurance Period 167
Final Indemnity Inspection - Including No Indemnity Due Claims or Denied Claims.....164
Final Inspection 86, 118, 120, 149, 159, 164, 167, 260, 339, 344, 398, 441
Fire Losses - Double Fire Coverage.....349
Fire Losses - General Information 346
First Insured and Second Insured Crop Claim Form Entires.....117
First Insured Crop....43, 94, 95, 101, 102, 103, 104, 105, 106, 107, 108, 109, 110, 111, 113, 114, 115, 116, 117, 118, 120, 121, 122, 126, 129, 130, 399, 409, 410

INDEX

First Insured Crop - Crop Codes 121
Flood Contaminated Crops....276
Flood Irrigation....399
Flooding - Contained Water....189, 338
FM ....*See* Foreign Material
Foreign Material.....5, 167, 238, 239, 259, 265, 266, 267, 268, 269, 270, 271, 272, 273, 309, 312, 317, 323, 326, 327, 353, 357, 400, 467, 470, 471
Foreign Material, FGIS Definitions 470, 471, 472
Form Standards.....2, 6, 7, 8, 13, 52, 144, 166, 180, 182, 398, 443, 448, 449, 450, 451, 464, 489
Formula for Determining Farm-stored Production to Count 317
Formula for Determining Net Cubic Feet....331
Formula for Determinng Gross Cubic Feet....319
Fractions-to-percent Conversions 313
Fraud, Waste, and Abuse....32, 33, 144, 344, 372, 413
FSA Abbreviations on Aerial Photos 437
FSA Codes On FSA-578 438
FSA Information Requests 144
FSA Materials/Information Available for Verification Purposes 146
FSA Measured Acres 191
FSA Office Visit 143
FSA-426 ....144, 145
Furrow Irrigation 399
Gleaning 163, 234, 235, 236, 237
Gleaning Codes For the Claim Form....237
Good Farming Practice Determination 74, 385
Good Farming Practices....54, 58, 83, 91, 160, 169, 188, 190, 191, 212, 266, 333, 345, 366, 374, 385, 399, 400, 408
Good Farming Practices, Failure to Follow 343, 366, 367, 385, 410
Grades of Grain for Quality Adjustment....244
Grain Graders....243
Gross Cubic Feet....314, 317, 320, 323, 325, 331
Gross Cubic Feet Formula By Structure....319
Growing Season Inspection....147, 180, 181, 182, 183, 323, 333, 339, 344, 441
GSI .... See Growing Season Inspection
Hail and Fire Exclusion....48, 49, 188
Hail/fire Exclusion Appraisal Factor....49, 50
Hail/fire Exclusion Appraisal Factor Chart....49, 50, 434
Harvested Production Verification 4, 46, 164, 205, 209
High-risk Land 19, 42, 133, 400, 420, 421
High-risk Land Exclusion Option 2, 42, 414, 415, 416, 417, 418, 419, 424, 425
Impractical to Replant....157, 158, 159
Inability to Harvest, Timely 177
Inability to Mechanically Harvest 212
Inches-to-foot Conversions....297
Incompetency of Insured 34, 371, 372
Incorrect Unit Arrangement 59
Ineligible for Insurance 21, 22, 29, 31, 46, 58, 143, 245, 397
Initial Planting Practice 89
Insect Infestation, Severe....366

EXHIBIT 23

INDEX

Insects 89, 92, 159, 182, 220, 221, 267, 337, 340, 366, 427
Inspections 147
Inspections Involving Denied Claims 166
Inspections, Acreage Report Reviews 184
Inspections, Crop 185
Inspections, Final - No Indemnity Due 166
Inspections, Final Indemnity 164
Inspections, Final Indemnity - End of Insurance Period 167
Inspections, Growing Season 180
Inspections, On-the-Farm Replant Inspection 149
Inspections, Pre-harvest 183
Inspections, Preliminary 147
Inspections, Production Pre-Measurement Service 178
Inspections, Replant Payment 148
Inspections, Self-certification Replant Inspections 152
Insurable Acreage 78, 93, 95, 96, 401, 442
Insurable Acreage Under Processor Contract 96
Insurable Farming Practices 73
Insurable Share 22
Insured Crop 99
Inverted cone .....*See* Cones, Inverted
Irrigated Practice Guidelines 78, 81
Irrigation.....14, 58, 75, 76, 77, 78, 79, 80, 81, 82, 83, 84, 85, 86, 87, 88, 134, 135, 136, 137, 156, 183, 188, 189, 220, 276, 340, 344, 399, 404, 426
Irrigation Assessments, Regional 81
Irrigation Practice.....58, 60, 75, 76, 77, 78, 79, 80, 81, 82, 83, 84, 86, 87, 88, 132, 136, 183, 188, 276, 340, 361
Irrigation Supply, National Assessment 82
Irrigation Water Allocation Decreases and Prevented Planting 86
Irrigation Water and Facilities, Adequate 82
Irrigation Water, Diversion 84
Judicial Review 346, 386, 387
LAF 65
Late Planting Coverage 381, 402
Late-filed Acreage Report 43, 155, 398
Lease Agreements 23, 26
Liability Adjustment Factor 5, 47, 58, 64, 65, 66, 98, 99, 192, 403, 473
Licensed Graders 241, 242, 243
Load Records 229, 303, 304, 305, 306, 309, 465
Local Market Area 252, 253, 258, 260, 261
Local Market Price 250, 251, 257, 259, 294
Loss Adjustment Responsibilities 13
Loss Notice .....*See* Notice of Prevented Planting or Notice of Damage or Loss
Measurement Methods 191, 197
Measuring Wheel 197, 403
Mechanically Unharvestable Crop 212
Mediation 345, 346, 385, 386
MIF .....*See* Misreported Information Factor
Misreported Information Factor 5, 47, 48, 58, 63, 64, 65, 66, 69, 98, 99, 154, 192, 403, 473

INDEX

Misrepresentation 33, 48, 66, 84, 155, 183, 213, 237, 344, 379, 390, 413
Moisture Adjustment ..... *See* Adjustments for Moisture
Moisture Adjustment Factor 265
Moisture Tests 265
Multi-cropping Codes 126
Mycotoxins 164, 240, 241, 251, 275, 277, 278, 279, 281, 282, 284, 428
Net Cubic Feet 317, 323, 332
Net Cubic Feet Formula 331
No Indemnity Due Claims 164, 166
Notice of Prevented Planting or Notice of Damage or Loss 52
Notice of Prevented Planting or Notice of Damage or Loss Form Standards 464
On-the-Farm Replant Inspections 149
Options ..... 2, 4, 6, 7, 42, 43, *See* Endorsements
Organic Farming Practice 89, 91, 92, 93, 132, 135
Organic Plan 405
Other Insurance 20, 348, 349, 350, 351, 352
Pack Factor 274, 314, 315, 316, 317
Person, Definition 19
Photo Documentation .. 60, 126, 131, 139, 146, 169, 180, 181, 183, 194, 197, 213, 300, 334, 335, 337, 378, 437
Planting Dates, Excess Coverage Verify 44
Power of Attorney 12, 22, 33, 34, 35, 38, 39, 54, 57, 391, 406, 432, 433
Practical to Replant 156
Pre-harvest Inspections 183, 184, 344
Preliminary Inspections 147, 148, 164, 339, 378
Pre-Measurement Service Inspections 178
Processor Contract 95, 96, 97, 98, 138, 147, 156, 223, 224, 226
Production Not To Count 233, 234, 314, 318, 326, 341
Production Reports (APH) 35, 133, 134, 137, 408
Production To Count .. 63, 86, 96, 97, 116, 123, 129, 130, 162, 163, 165, 190, 191, 209, 213, 222, 225, 226, 233, 235, 236, 239, 247, 259, 271, 306, 338, 352, 354, 367, 393, 396, 408
QAF ..... *See* Quality Adjustment Factor
Quality Adjustment 92, 159, 162, 165, 167, 229, 235, 238, 239, 242, 244, 245, 253, 254, 255, 257, 258, 259, 260, 261, 262, 265, 269, 272, 273, 275, 277, 282, 283, 293, 294, 295, 301, 303, 308, 312, 318, 378, 379, 442
Quality Adjustment Factor 5, 245, 246, 247, 254, 255, 256, 257, 259, 260, 265, 283, 285, 291, 293
Quality, Who Can Determine 243, 244
Reconsideration 345, 385
Reduction in Value . 5, 165, 251, 252, 253, 254, 255, 256, 257, 262, 263, 283, 291, 293, 294, 295, 408
Replant 148, 149, 150, 151, 152, 154, 155, 156, 157, 160
Replant Payment Inspections, On-the-Farm 148
Replant, Impractical to Replant 158
Replant, When Crop Must Be Replanted 155
Replanted Acres 448, 453
Replanting Payment 31, 47, 149, 150, 151, 152, 153, 154, 155, 159, 160, 161, 368, 377, 390, 397, 401, 403, 409, 443, 445, 447, 450, 451, 465, 473
Representative Sample Areas 75, 164, 208, 210, 211, 212, 215, 216, 217, 220, 221, 240, 277, 278, 279, 409
Responsibilities, Approved Insurance Provider 7

INDEX

Responsibilities, Insured....17
Responsibilities, Loss Adjuster....13
Responsibilities, RMA Product Administration and Standards Division....7
Revised Acreage Report....48, 55, 56, 58, 60, 67, 70, 92, 159
Risk Classification Verification....45
RIV....*See* Reduction in Value
Round Bin Conversion Chart....456, 458, 459, 460, 461, 462, 463
Rounding Rules....311, 312
Row-width Measurments....214
Samples...17, 53, 62, 209, 213, 215, 218, 220, 221, 232, 238, 239, 240, 241, 242, 243, 244, 258, 265, 266, 269, 270, 273, 276, 277, 278, 279, 282, 283, 293, 301, 308, 409
Samples for Grading/Analyzing, Who Can Submit....239
Samples, Adjuster Obtained for Quality Adjustment....240
Samples, Blended....242, 278, 282
Samples, Unblended....242
SBI....*See* Substantial Beneficial Interest
SCP....*See* Simplified Claim Process
Second Crop Acreage.53, 101, 102, 103, 104, 105, 107, 108, 116, 117, 118, 120, 122, 126, 127, 128, 370
Second Crop Acreage Inspections....116
Self-certification Replant Inspections....148, 152
Self-certification Replant Worksheet....152, 153, 154, 155, 448, 449, 450, 451, 489
Self-certification Replant Worksheet Form Standards....448
Share Discrepancies....26
Share, Insurable....*See* Insurable Share
Share, Verifying....26
Short-rated Acreage....58, 62, 63
Simplified Claim Process....377, 378, 379
Skip-row Planting Patterns, Determining Acreage....202
Sold Production....227
Sold Production Verified....442
Square Footage of Floor Space....316
Square Root Table....454
Structure Markings....234, 303, 304, 307, 309, 465
Stud and Joist Computations....331
Subrogation....344
Substances or Conditions Injurious to Human or Animal Health 235, 239, 243, 251, 253, 257, 281, 284
Substantial Beneficial Interest....6, 8, 29, 30, 31, 32, 33, 34, 35, 36, 37, 38, 372, 411, 432, 433
Summary of Coverage....13, 69, 73, 180, 395
Summary of Insurance....*See* Summary of Coverage
Summerfallow Practice....66, 74, 75
Sustainable Farming Practice....411
Test Weight167, 243, 244, 245, 247, 254, 255, 256, 257, 258, 269, 273, 274, 291, 293, 309, 314, 315, 316, 317, 323, 326, 332, 400
Total Production.....85, 96, 97, 129, 130, 164, 204, 207, 229, 231, 233, 297, 304, 306, 307, 326, 338, 352, 354, 389
Total Production Guarantee....96
Total Production, Appraised and Harvested....205
Transfer of Right to Indemnity....37

INDEX

Transitional Acreage....412
Transportation Costs....236, 247, 258, 261, 263
Unable to Mechanically Harvest Crop....212
Unblended Samples....242
Uninsured Causes of Loss....14, 76, 91, 160, 167, 190, 191, 209, 224, 225, 259, 333, 337, 339, 340, 341, 374, 375, 385, 408
Unit Division....46, 55, 72, 98, 131, 132, 134, 135, 136, 137, 138
Unit Division Option....46, 132, 139
Unit Structure 22, 61, 68, 71, 88, 111, 118, 122, 131, 132, 133, 135, 138, 141, 142, 242, 356, 413, 465
Unreported Acreage....45, 57, 68, 70, 71, 154, 186, 187, 209, 363, 364
Unreported Units....44, 70, 71, 186, 204, 209, 356, 362, 363, 364, 365
Unusual Cases....333
Unusual or Controversial Cases....333, 337
Unusual Storage Configurations....323
USDA Farm Program Compliance - Controlled Substance Violation....143
USWA Licensed Warehouse Locations....243, 244
USWA Licensed Warehouses....242, 243
Verification....8, 9, 10, 11, 15, 26, 27, 28, 39, 41, 43, 44, 69, 117, 131, 146, 188, 190, 228, 276, 296, 338, 375, 377, 444
Verifying Accuracy of Scale....302
Verifying Acreage Report....14
Verifying Acreage Report Review, Items to be Verified....184
Verifying APH Records....412
Verifying Cause of Damage....451
Verifying Cause of Loss....187, 224
Verifying Commericially Stored Production....227
Verifying Contained Water....16
Verifying Crop Share....26, 27
Verifying Crop Was Replanted....153
Verifying Current FDA Action or Advisory Levels of Mycotoxins....290
Verifying Date of Damage....451
Verifying Destruction of Crop....237
Verifying Destruction of Production....264
Verifying Failure of the Irrigation Water Supply....76
Verifying Fed Production....231
Verifying Field Initially Planted....450
Verifying Harvest of All Acres....226
Verifying Harvested Production....226
Verifying Harvested Production Records and Receipts....227
Verifying Ignition Source of Fire....347
Verifying Insurability Requirements for the Crop....16
Verifying Insurable Acreage....93
Verifying Insurable Cause of Loss....225
Verifying Insurance Eligibility....19
Verifying Insured Crop....99
Verifying Insured's Compliance With Agreement for Representative Sample Areas....221
Verifying Insured's Compliance With Contract Provisions....8
Verifying Irrigation Practice....78, 81
Verifying Legal Description....14, 46

INDEX

Verifying Load Records 305
Verifying Organic Records 91
Verifying Planting Practice 451
Verifying Production Not To Count 233
Verifying Replant Costs 451
Verifying Replanting Payment Eligibility 154, 368
Verifying Share 22, 27
Verifying Sold Production 227
Verifying Time of Loss 14
Verifying Total Production 206
Verifying Total Production - Appraised and Harvested 205
Verifying Uninsured Cause of Loss 14, 164, 190, 225
Verifying Unit Structure 131
Verifying Value Recevied 258
Verifying Water Diversion Appropriateness 84
Video Documentation 169, 180, 183, 213, 334, 335
Volume to Bushel Conversion 332
Volume to Hunderedweight Conversion 332
Vomitoxin 252, 253, 286, 293, 428
Weed Infestataion, Severe 366
Weeds 74, 89, 92, 182, 220, 221, 267, 337, 338, 340, 366, 470, 471
Weighed Production 298, 302, 355
Wheel Measuring Formulas 199
Wheel Measuring Method 197
Whole Farm Unit 43, 149, 242, 377, 413
Wind Erosion 264, 367, 373
Withdrawal of Claim 166
Written Agreement 4, 6, 7, 45, 59, 73, 89, 94, 139, 202, 209, 362, 390, 412, 413
Written Unit Agreement 138, 139
Zero Appraisal 213, 225
Zero Market Value 162, 163, 165, 235, 247, 249, 250, 254, 255, 256, 258, 261, 262, 263, 264, 276, 285
Zero Production to Count 235, 276, 285
Zero Value ..... *See* Zero Market Value